BETA MARINE LTD,
UNIT 2 DAVY WAY,
WATERWELLS,
QUEDGELEY,
GLOS. GL2 2AD
UNITED KINGDOM
TEL: (01452) 723492
INT. TEL: 44 1452 723492
FAX: (01452) 729916
WEB SITE: www.betamarine.co.uk
EMAIL: spares@betamarine.co.uk

BETA MARINE

SUPER 3 SERIES 4 CYLINDER ILLUSTRATED PARTS LIST INCLUDING:

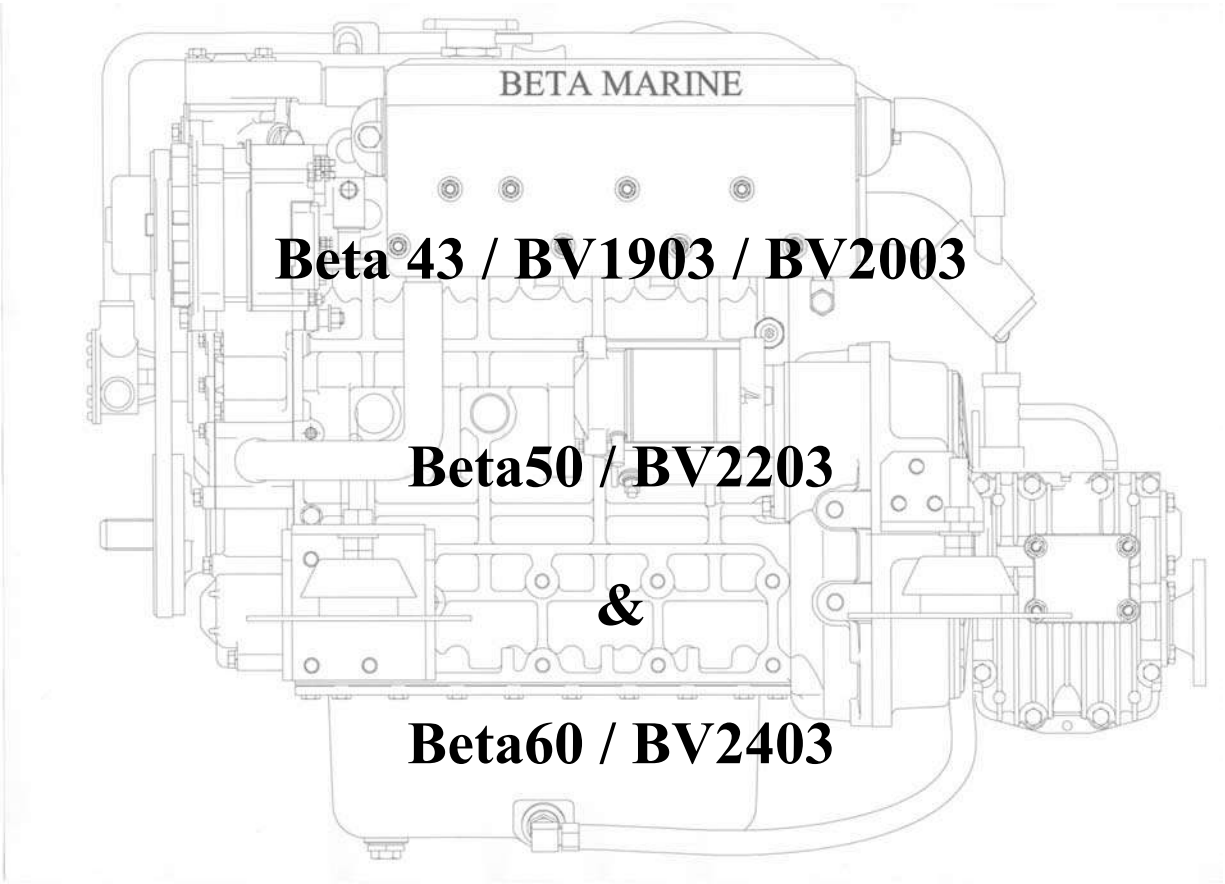

Beta 43 / BV1903 / BV2003

Beta50 / BV2203

&

Beta60 / BV2403

HEAT EXCHANGER COOLED MARINE DIESEL ENGINES

CALIFORNIA - Proposition 65 Warning
Diesel engine exhaust and some of its constituents are known to the state of California to cause cancer, birth defects and other reproductive harm.

Beta43-Beta50HE Illustrated parts list Rev 004 October 2011

Prices and specifications are subject to amendment without notice. Information given is subject to our current conditions of tender and sale.

Prices and specifications are subject to amendment without notice. Information given is subject to our current conditions of tender and sale. In all cases please quote ***Beta Marine WOC 'K' number*** and Engine Type. Beta Marine will not be held responsible for incorrect supply without this information.

Spare Parts Listing

Heat Exchanger & Keel Cooled Beta43, Beta50 and Beta60

Description			Part No	Qty/Engine
Wasting Zinc Anode			209-61840	1
Heat Exchanger "O" Ring (HEADER WITH SINGLE BOLT ENDCAP)			209-80110	2
Heat Exchanger "O" Ring (2011 HEADER WITH 3 BOLT ENDCAP)			212-07273	
Pressure Cap 95kPa – 15 PSI			209-80130	1
Thermostat			600-72450	1
Thermostat Gasket			600-80490	1
Fuel Filter			211-60210	1
Air Filter Element –End 2010 (3 CLAMP TYPE)			211-61831	1
Air Filter Element –From 2011 (WITH CENTRAL WING NUT)			211-08133	
Lubricating Oil Filter			211-70510/02	1
Sump Pump			210-80061	1
Sump Pump Clamp			212-00793	2
Dip Stick Extended - guide and stick kit			600-96320	1
Sea Water Pump –Johnson from Sept 2009			207-07415	1
Sea Water Pump –Jabsco to Sept 2009			207-80780	
Sea Water Pump Impeller Kit–Johnson from Sept 2009			207-07559	1
Sea Water Pump Impeller Kit–Jabsco to Sept 2009			207-80800	
Sea Water Pump Service Kit (inc gasket and screws) –Johnson from Sept 2009			207-07560	1
Sea Water Pump Service Kit (inc gasket and screws) –Jabsco to Sept 2009			207-80810	
Fuel Lift Pump		Beta43 / Beta60 & Beta50 from July2008	600-80870	1
		Beta50 (to July2008)	600-00633	1
Fuel Lift Pump Gasket			600-00538	1
Belt	Std "V" – 65A, Beta43 to Sept08, Beta50 to July07		214-96830	Correctly Select a Belt
	Std "V" – 65A, Beta43 from Sept08-April11, Beta50 from July07-April11 & Beta60		214-99223	
	Std "V" – 65A, Beta43,Beta50 & Beta60 –from April2011		214-80750	
	6K -100A, Beta43 to Sept08, Beta50 to July07		214-00497	
	6K- 100A, Beta43 from Sept08-Oct09, Beta50 from July07 & Beta60 –Oct09		214-92105	
	6K- 100A, Beta43, Beta50 & Beta60 –From Oct 2009		214-07037	
Alternator		65 Amp External Fan	200-01155	1
		100 Amp Internal Fan	200-03008	1
Control Panel standard Key		To June 2008	600-00058	a pair
		From June 2008	600-00058/01	
Control Panel Key Switch		To June 2008	600-00057	N/A
		From June 2008	600-00057/01	1
Control Panel Stop Button (and heat & start on ABVW)			200-00072	1

Description			Part No	Qty/Engine
Tachometer 0-3000rpm with digital hour counter			200-02373/03	1
Water temperature switch Gauge (B & C panels)			200-96200	1
Oil pressure switch Gauge (C panels only)			200-96190	1
Voltmeter (C panels only)			200-96210	1
Green power on indicator lamp & retaining clip			200-04656	1
Red warning indicator lamp & retaining clip			200-04657	3 or 4
Alarm board – all panels from June 2005			200-04655	1
Relay 12 Volt 40A (28Ra) fitted to rear of panels			200-87020	1
Stop Solenoid	*Side mounted*, energise to stop –All to July 2007 & Beta43 to Sept2008		600-71670	1
	Front mounted, energise to run –Beta50 from July2007 –July2008 & Beta60		600-06964	
	Front mounted, energise to stop –Beta43 from July08 & Beta50 from July2008		600-02244	
Fuse (Blade) 40 Amp			200-00959	1
Standard Engine Harness			200-05267	1
65 Amp Alternator Sub Loom Iskra			200-01196	1
Control panel extension loom		1 Metre	200-04588/01	1
		2 Metre	200-04588/02	
		3 Metre	200-04588/03	
		4 Metre	200-04588/04	
Water Temperature Switch (Panel A, ABV & ABVW)		To October 2008	200-01133	1
		From November 2008	600-62820	
Water Temp Sender (Panel C & B) 5/8UNF (Not Beta60 from Mar11)			200-94360	
Water Temp Sender (Panel C & B) 1/8NPT –Beta60 from Mar11			200-08248	
Oil Pressure Switch (Panel A, ABV & ABVW)			600-62670	1
Oil Pressure Sender (Panel C)			200-94350	
Exhaust Bend Gasket			212-09070	1
Drive Plate		22-B-60 - TMC60	206-91950	1
		PRM150 – Hydraulic –to Dec2009	206-03981	
		PRM150 – Hydraulic –from Dec2009	206-07584	
		PRM260 - Hydraulic	206-02095	
		ZF25 – Hydraulic ***– CHECK WOC WITH BETA***	206-05185	
Flexible Mountings		(Metalastic type 45)	213-85900/02	4
		(Metalastic type 55)	213-96970/01	
Rocker Cover Gasket (from Jan 2006)			600-06374	1
Operators Maintenance Manual			221-02889	1
Workshop Manual– base engine only			600-00758	1
Spare Parts Manual – base engine only, Beta43, 50 & 60 (available as a pdf)			600-02441	1

Contents / Index

2 Quick reference parts listing

5 Illustrated quick reference parts listing –front view

6 Illustrated quick reference parts listing –port view

7 Illustrated quick reference parts listing –starboard view

8 Fresh water system –fitting of heat exchanger tank

10 Fresh water system –heat exchanger tank components

12 Fresh water system –sea water pump, pipe-work and water injection bend

14 Fresh water system –hydraulic gearboxes

16 Fresh water system –ZF15M gearboxes

18 ZF25H gearbox assembly

20 PRM150 gearbox assembly

22 ZF12M / ZF15M gearbox assembly

24 PRM260 gearbox assembly

26 TMC60 gearbox assembly

28 Oil system & engine sump

30 Alternator (65A), air filter & flywheel

32 Heat exchange fuel system

34 Heat exchange fuel injection system

36 Standard feet & speed control bracketry

38 Alternator (100 Amp), 6K drive & Beta Controller

40 Wiring harness and switches

41 2a Simple panel & components

43 2ab panel & components

45 2ab'V' panel & components

47 2ab'V'W panel & components

48 2b SFIA panel & components

50 2c Deluxe panel & components

53 Panel gauges & senders

54 Various electrical & panel parts and components

55 Expansion water bottle and spare parts

56 Fitting calorifier connections (from March 2011 spec)

57 Tubestack alignment and cleaning (from March 2011 spec)

58 Installation kits / Spares kits

BETA MARINE LTD,
UNIT 2 DAVY WAY,
WATERWELLS,
QUEDGELEY,
GLOS. GL2 2AD
UNITED KINGDOM
TEL: (01452) 723492
INT. TEL: 44 1452 723492
FAX: (01452) 729916
WEB SITE: www.betamarine.co.uk
EMAIL: spares@betamarine.co.uk

Beta43, Beta50 & Beta60 ILLUSTRATED QUICK REFERANCE PARTS LIST 2011 –FRONT VIEW

Air filter element: 211-61831 to Dec2010, 211-08133 From Dec2011

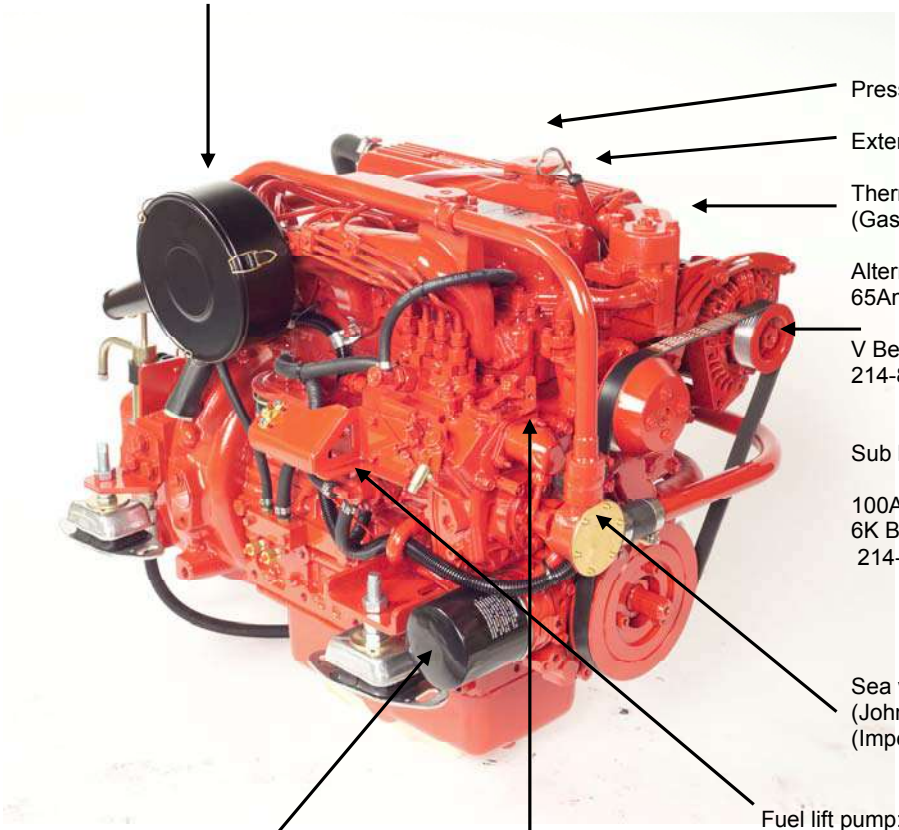

Pressure cap: 209-80130

Extended dipstick: 600-96320

Thermostat: 600-72450
(Gasket: 600-80490)

Alternator:
65Amp: 200-01155

V Belt: *(All –from April2011)*
214-80750

Sub loom: 200-01196

100Amp: 200-03008
6K Belt: *(All fromOct2009)*
214-07037

Sea water pump: 207-07415
(Johnson from Sept 2009)
(Impeller: Johnson 207-07559)

Fuel lift pump:
Beta43: 600-80870
Beta50 to July 2007: 600-00633
Beta50 from July 2007: 600-80870
Beta60: 600-80870

Oil filter: 211-70510/02

Fuel solenoid
All –July 2007 & Beta43 to Sept 2008: 600-71670 (side mounted)
Beta50 Energise to Run From July2007-JULY2008 & Beta60: 600-06964
Beta43 From Sept 2008, Energise to Stop: 600-02244 (coupler 600-07330)
Beta50 From July2008, Energise to Stop: 600-02244 (coupler 600-07330)
Beta60 To Nov2009, Energise to Run: 600-06964 (coupler 600-06793)
Beta60 From Nov2009, Energise to Stop: 600-02244 (coupler 600-07330)

Prices and specifications are subject to amendment without notice. Information given is subject to our current conditions of tender and sale. In all cases please quote ***Beta Marine WOC 'K' number*** and Engine Type. Beta Marine will not be held responsible for incorrect supply without this information.

BETA MARINE LTD,
UNIT 2 DAVY WAY,
WATERWELLS,
QUEDGELEY,
GLOS. GL2 2AD
UNITED KINGDOM
TEL: (01452) 723492
INT. TEL: 44 1452 723492
FAX: (01452) 729916
WEB SITE: www.betamarine.co.uk
EMAIL: spares@betamarine.co.uk

Beta43, Beta50 & Beta60 ILLUSTRATED QUICK REFERANCE PARTS LIST 2011 –PORT VIEW

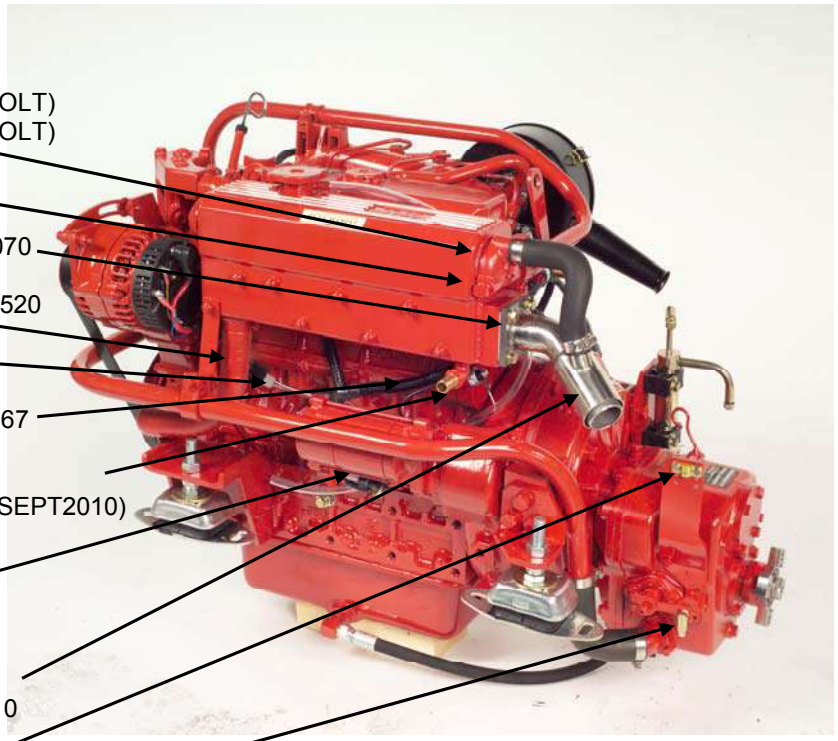

O Rings: 209-80110 (1 BOLT)
O Rings: 212-07273 (3 BOLT)

Zinc: 209-61840

Exhaust Gasket: 212-09070

Fresh water pipe: 209-94520

Fuse: 200-00959

Engine harness: 200-05267

Calorifier:
AK/HE/CAL/003 (FROM SEPT2010)
Starter:
BV1903: 600-00540
BV2003: 600-07408
Beta50: 600-00540
Beta60: 600-07064

Exhaust elbow: 202-90610

Saddle: 212-99241/01

Ball joint: 212-99240/01

BETA MARINE LTD,
UNIT 2 DAVY WAY,
WATERWELLS,
QUEDGELEY,
GLOS. GL2 2AD
UNITED KINGDOM
TEL: (01452) 723492
INT. TEL: 44 1452 723492
FAX: (01452) 729916
WEB SITE: www.betamarine.co.uk
EMAIL: spares@betamarine.co.uk

BETA MARINE

Beta43, Beta50 & Beta60 ILLUSTRATED QUICK REF. PARTS LIST 2011 –STARBOARD VIEW

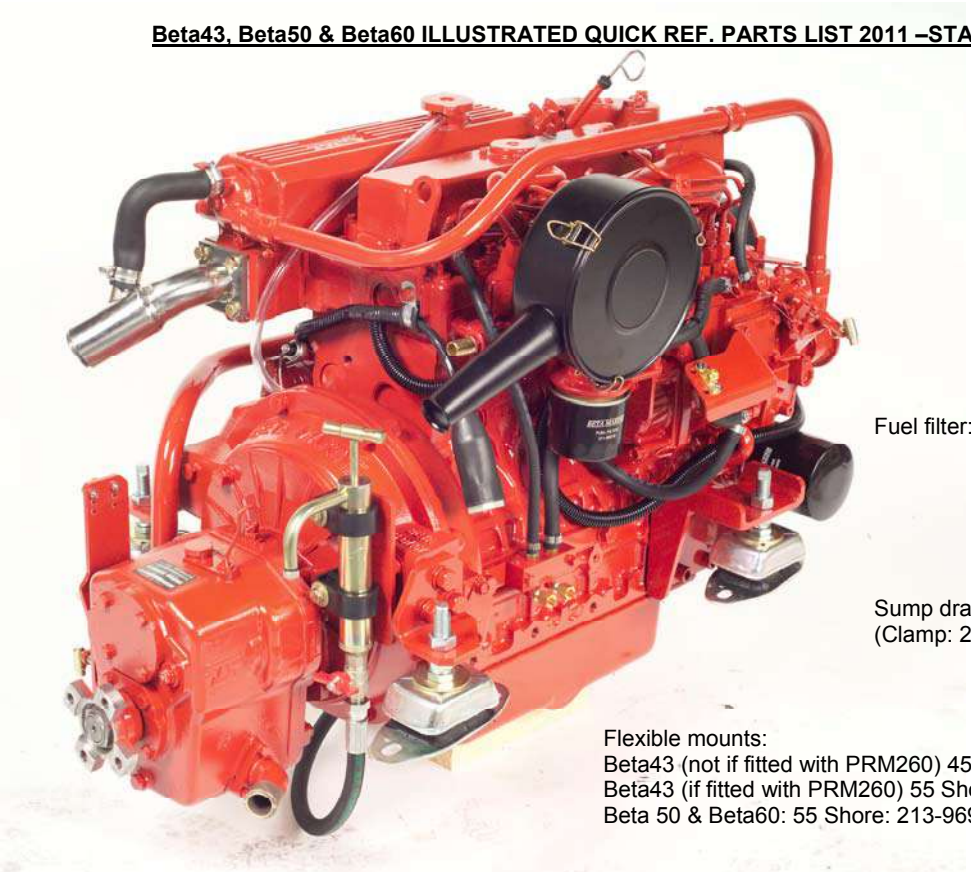

Fuel filter: 211-60210

Sump drain pump: 210-80061
(Clamp: 212-00793)

Flexible mounts:
Beta43 (not if fitted with PRM260) 45 Shore: 213-85900/02
Beta43 (if fitted with PRM260) 55 Shore: 213-96970/01
Beta 50 & Beta60: 55 Shore: 213-96970/01

GEARBOX OPTIONS	GEARBOX P/No	DAMPER P/No	MORSE GEAR BRACKET P/No	ADAPTOR PLATE P/No	FLEXIBLE COUPLING
TMC 60 R2	204-91680	206-91950	202-05129	205-60990	212-01430
TMC 60 R2.5	204-01627				
TMC 260 R2	204-02134	206-02094/01			
TMC 260 R2.5	204-03336				
TMC 260 R3	204-05312				
TM 345A R2	204-03053	206-03335	202-61582	N/A	212-01248
ZF 12M R2	204-85860	206-00895		205-60990	212-01430
ZF 15M R2	204-85870	206-91950			
ZF 15MA R2	204-85875				
ZF15 MIV 2.13:1	204-00767	206-00895			ASK
ZF 25M R2	204-91660	206-01682		205-85810	212-01430
ZF 25H R2	204-98890	206-05185	202-05406		
ZF 25H R2.8	204-01191				
ZF 25HA R2	204-00743				
ZF 25HA R2.29	204-02880				
ZF 25HA R2.71	204-01148				
PRM 150 D2	204-91920	206-07584	202-94100	205-60990	
PRM 150 D3	204-91700				
PRM 260 D2	204-80530	206-02095	202-80560	205-72820	212-01248
PRM 260 D3	204-92230				
PRM 500 D2.5	254-94834	206-04811		255-02598	212-02699

Prices and specifications are subject to amendment without notice. Information given is subject to our current conditions of tender and sale. In all cases please quote ***Beta Marine WOC 'K' number*** and Engine Type. Beta Marine will not be held responsible for incorrect supply without this information.

DRAWING 100-05301 (PAGE 1 of 5)

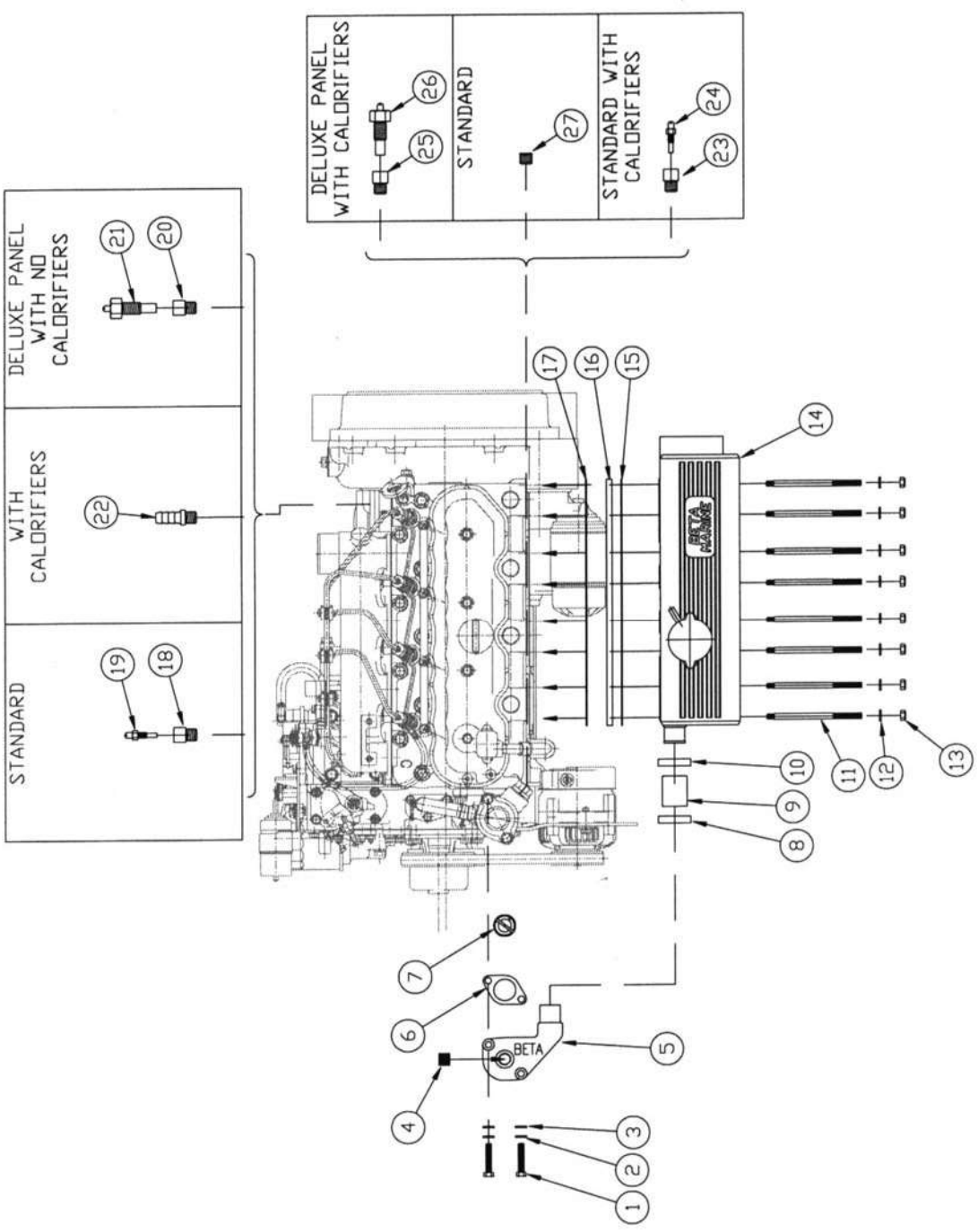

DRAWING 100-05301

Beta43, Beta50 & Beta60 WATER SYSTEM

(PAGE 1 of 5)

Ref No	Part Number	Part Name	Quantity
01	217-99304	M8 x 60 mm SET	2
02	217-99292	M8 SPRING WASHER	2
03	217-99293	M8 FLAT WASHER	2
04	212-99403	3/8"BSP GALVANISED PLUG	1
05	209-90290	SUPER 3 SERIES THERMOSTAT HOUSING –MAR2011	1
	209-07643	SUPER 3 THERMOSTAT HOUSING –FROM MARCH 2011	
06	600-80490	SUPER 3 SERIES THERMOSTAT GASKET	1
07	600-72450	SUPER 3 SERIES THERMOSTAT	1
08	212-00066	S/S HOSE CLIP 30-40mm	1
09	218-99262	28mm I/D SILICON HOSE	0.7
10	212-00066	S/S HOSE CLIP 30-40mm	1
11	201-71380/01	SUPER 3 MANIFOLD STUD	8
12	217-99293	M8 FLAT WASHER	8
13	217-99296	M8 NYLOC	8
14	209-01925	SUPER 3 SERIES 4 CYLINDER HEAT EXCHANGER (INCLUDES 15 & 16)	1
	209-08539	SUPER 3 SERIES 4 CYLINDER HEAT EXCHANGER – FROM MAR2011 (LESS ZINC ANODE 209-61840)	
15	N/A	HEAT EXCHANGER GASKET –TO MAR11 **SEE 14**	0
	212-08629	HEAT EXCHANGER EXHAUST GASKET –FROM MAR11	4
16	N/A	HEAT EXCHANGER SPACER PLATE –TO MAR11 **SEE 14**	0
	202-08618	EXHAUST GASKET SPACER PLATE –FROM MAR2011	4
17	600-72880	EXHAUST MANIFOLD GASKET	4
18	212-01480	WATER TEMPERATURE SWITCH ADAPTOR	1
19	200-01133	WATER TEMPERATURE SWITCH –TO OCT 2008	1
	600-62820	WATER TEMPERATURE SWITCH –FROM NOV 2008	1
20	200-91980	TEMPERTATURE SENDER ADAPTOR	1
21	200-94360	WATER TEMPERATURE SENDER (DELUXE PANEL)	1
22	212-99233	3/8"BSP x 5/8 HOSE CONNECTOR	1
23	212-04626	ADAPTOR 1/2"BSPTM x 1/8"BSPF –Beta43 to Sept2008, Beta50 to July2007	1
	212-01480	ADAPTOR 3/8BSPTMx1/8BSPF GALV –Beta43 from Sept2008, Beta50 from July2007, Beta60	1
24	200-01133	WATER TEMP SWITCH –TO Nov2008	1
	600-62820	WATER TEMP SWITCH –FROM Nov2008	1
25	201-03202	ADAPTOR, 1/2"BSPM x 5/8"UNFF –Beta43 to Sept2008, Beta50 to July2007	1
	200-91980	ADAPTOR, 3/8BSPTMx1/8BSPF GALV –Beta43 from Sept2008, Beta50 from July2007, Beta60	1
26	200-94360	WATER TEMPERATURE SENDER (DELUXE PANEL)	1
27	212-05076	M12 FINE PLUG, Beta50 fromJuly2007 – July 2008, Beta60	1
	209-80050	3/8BSP PLUG, Beta43 from Sept2008 3/8BSP PLUG, Beta50 from July2007 – July2008 3/8BSP PLUG, Beta50 from July2008 3/8BSP PLUG, Beta60	2 1 2 2
	600-02060	½"BSP PLUG, Beta43 to Sept2008, Beta50 to July2007	1

For latest calorifier fitting –see page 56 (all engines from September 2010)

Prices and specifications are subject to amendment without notice. Information given is subject to our current conditions of tender and sale. In all cases please quote ***Beta Marine WOC 'K' number*** and Engine Type. Beta Marine will not be held responsible for incorrect supply without this information.

DRAWING 100-05301 (PAGE 2 of 5)

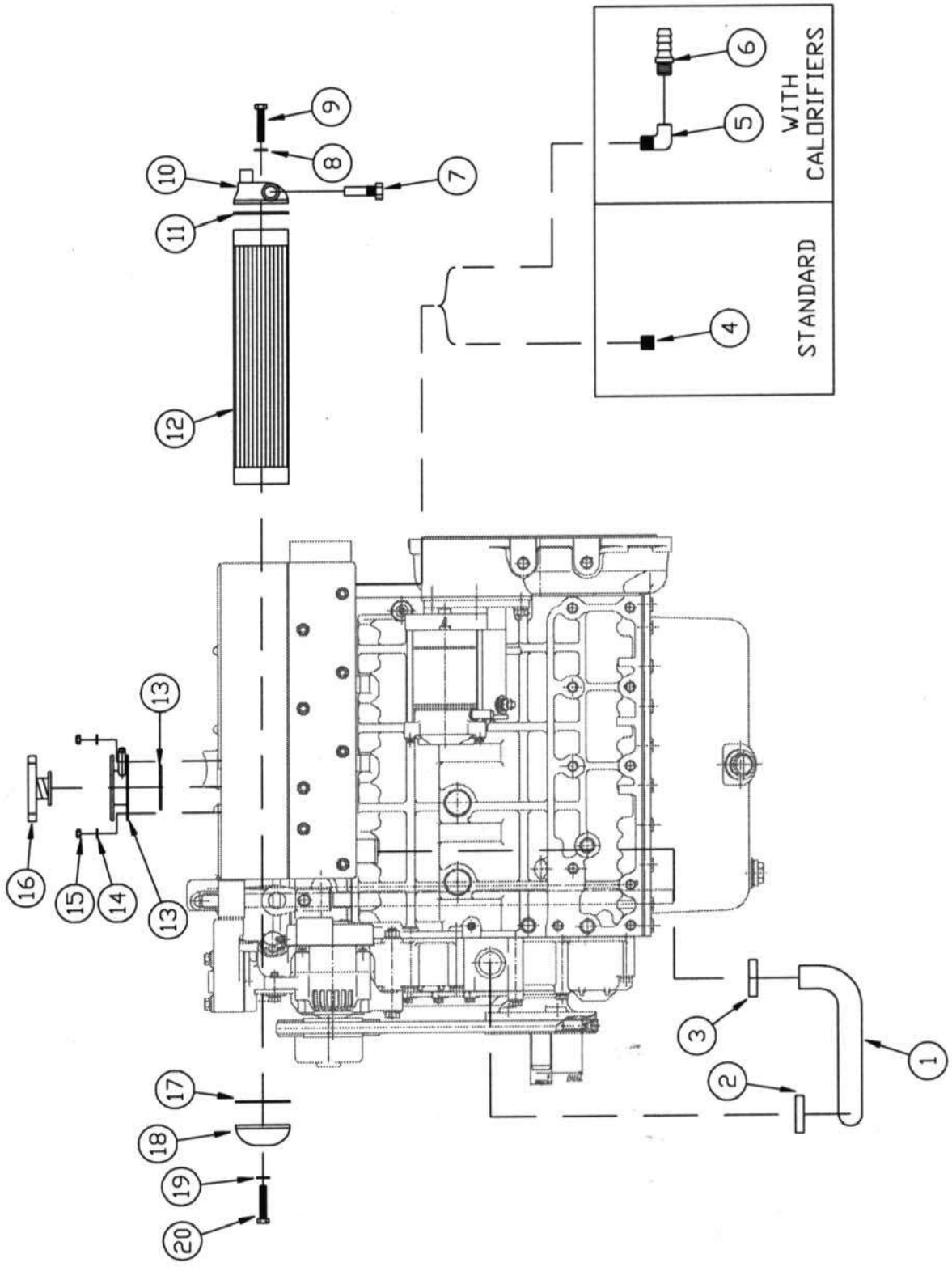

DRAWING 100-05301

Beta43, Beta50 & Beta60 WATER SYSTEM

(PAGE 2 of 5)

Ref No	Part Number	Part Name	Quantity
01	209-94520	SUPER 3 SERIES SILICON FRESH WATER PIPE	1
02	212-00066	STAINLESS STEEL HOSE CLIP 30-40mm	1
03	212-00066	STAINLESS STEEL HOSE CLIP 30-40mm	1
04	212-99403	3/8”BSP GALVANISED PLUG	1
05	212-99237	3/8”BSPTM x 3/8"BSPF 90º ELBOW	1
06	212-99233	3/8”BSP x 5/8 HOSE CONNECTOR	1
07	209-61840	ZINC ANODE	1
08	209-00017	M8 BONDED SEAL (SINGLE BOLT TUBESTACK ONLY)	1
09	209-00016	M8 PHOSPHUR BRONZE BOLT	1
	217-00190Z	M8 x 1 x 45mm SOCKET CAP HEAD	3
10	209-80440	22mm GUNMETAL HEADER	1
	208-07271	22mm GUNMETAL HEADER –SUITS ANODE	
11	209-80110	NITRILE ‘O’ RING –TUBESTACK (SINGLE BOLT TYPE)	1
	212-07273	NITRILE ‘O’ RING –TUBESTACK (3 BOLT TYPE)	
12	209-85840	SUPER 3 SERIES 4 CYLINDER H/E TUBESTACK –TO MARCH 2011 (SINGLE BOLT)	1
	209-04662	SUPER 3 SERIES 4 CYL H/E SPECIAL HOT CLIMATE TUBESTACK –TO MARCH 2011 (SINGLE BOLT)	
	209-08543	SUPER 3 SERIES 4 CYLINDER H/E TUBESTACK –FROM MARCH 2011 (3 BOLT TYPE)	
13	209-02167	FILLER NECK ASSEMBLY & ‘O’ RING	1
14	217-99275	M6 SPRING WASHER	2
15	217-00052	M6 NUT	2
	217-06947	M6 x 20mm SOCKET BUTTON SCREW (EARLY MODELS)	
16	209-80130	95kPa PRESSURE CAP (NOT USA)	1
	209-02323	13PSI PRESSURE CAP (USA ONLY) & ALL 3 BOLT TYPE	
17	209-80110	NITRILE ‘O’ RING –TUBESTACK (SINGLE BOLT TYPE)	1
	212-07273	NITRILE ‘O’ RING –TUBESTACK (3 BOLT TYPE)	
18	209-80100/01	HEAT EXCHANGE RETURN ENDCAP (1 BOLT TYPE)	1
	208-07272	HEAT EXCHANGE RETURN ENDCAP (3 BOLT TYPE)	
19	209-00017	M8 BONDED SEAL (SINGLE BOLT TUBESTACK ONLY)	1
20	209-00016	M8 PHOSPHUR BRONZE BOLT	1
	217-00190Z	M8 x 1 x 45mm SOCKET CAP HEAD	3

DRAWING 100-05301 (PAGE 3 of 5)

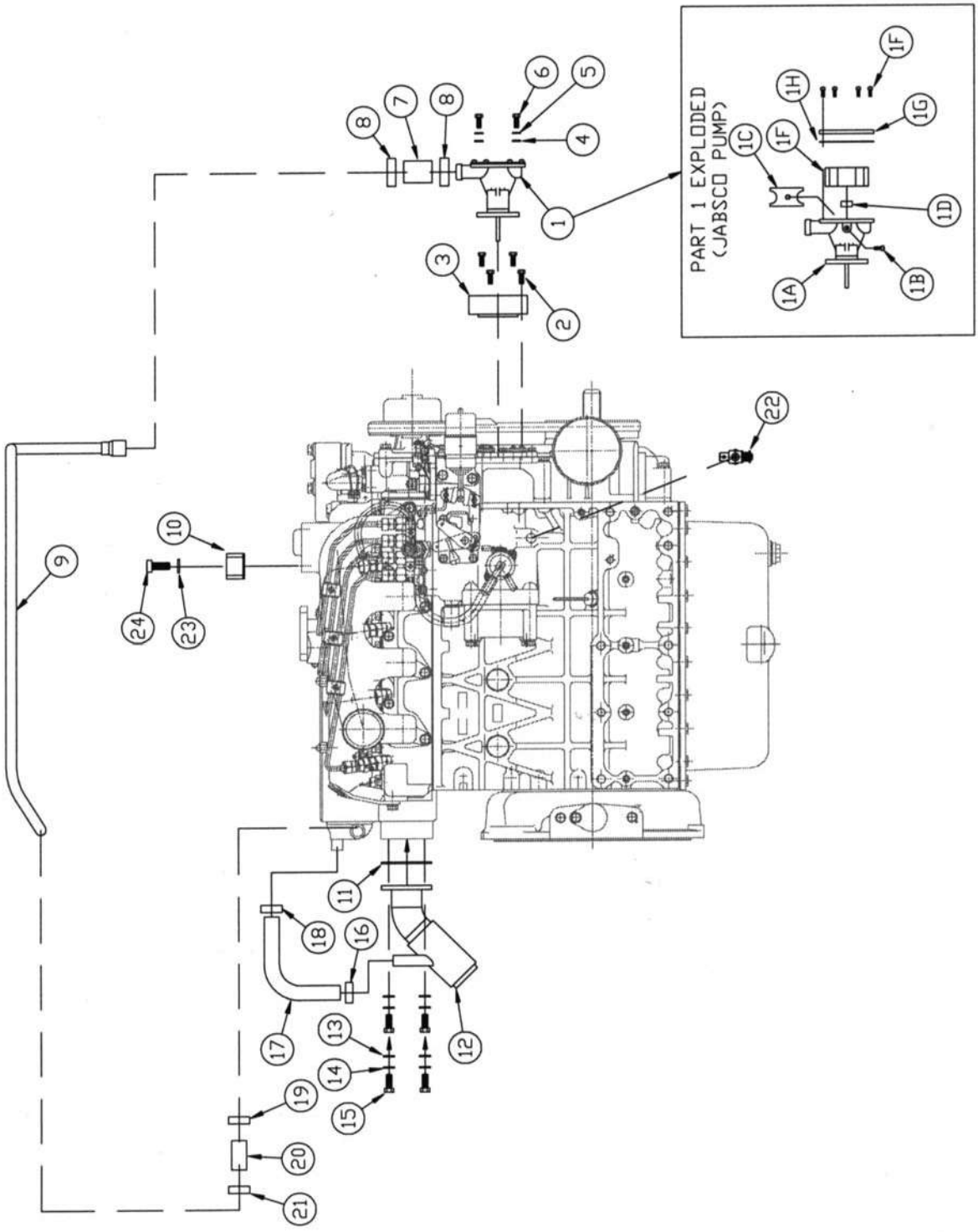

DRAWING 100-05301

Beta43, Beta50 & Beta60 WATER SYSTEM

(PAGE 3 of 5)

Ref No	Part Number	Part Name	Quantity
01	207-80780	SUPER 3 JABSCO SEA WATER PUMP –TO SEPT 2009	1
	207-07415	S3 JOHNSON SEA WATER PUMP –FROM SEPT 2009	
02	217-99289	M6 x 20mm SOCKET CAP SCREW	4
03	201-63120	SUPER 3 SEA WATER PUMP ADAPTOR RING	1
	600-00866	GASKET FOR 201-63120	1
04	217-99281	M6 x 20mm SET	4
05	217-99275	M6 SPRING WASHER	4
06	217-99276	M6 FLAT WASHER	4
07	218-99251	1 1/8" I/D BLACK RADIATOR HOSE	0.06m
08	212-00066	STAINLESS STEEL HOSE CLIP 30-40mm	2
09	209-03203	SUPER 3, 4 CYLINDER RAW WATER COOLING PIPE (MECHANICAL GEARBOX ONLY, NO OIL COOLER)	1
10	212-02808	PIPE FITTING CLIP (N°4)	1
11	600-62620	GASKET, 2" EXHAUST	1
12	202-90610	2"x22mm WATER INJECTION BEND	1
	202-92400/22	5" HIGH RISE 2"x22mm WATER INJECTION BEND	1
13	217-99293	M8 FLAT WASHER	4
14	217-99292	M8 SPRING WASHER	4
15	217-99299	M8 x 25mm SET	4
16	212-98464	STAINLESS STEEL HOSE CLIP 22-30mm	1
17	209-91760	22mm DIAMETER 90 ELBOW	1
18	212-98464	STAINLESS STEEL HOSE CLIP 22-30mm	1
19	212-98466	STAINLESS STEEL HOSE CLIP 25-35mm	1
20	218-99249	7/8" I/D BLACK RADIATOR HOSE	0.06m
21	212-98464	STAINLESS STEEL HOSE CLIP 22-30mm	1
22	600-00621	SUPER 3 SERIES WATER DRAIN TAP	1
23	217-99321	M10 FLAT WASHER	1
24	217-99335	M10 x 25mm FINE SOCKET CAP SCREW	1

Ref No	Part Number	Part Name	Quantity
1A	207-80780	SUPER 3 SERIES SEA WATER PUMP –TO SEPT 2009	1
1B	207-01323	SCREW, SUPER 3 SERIES JABSCO PUMP CAM	1
1C	207-01250	CAM, SUPER 3 SERIES JABSCO PUMP	1
1D	207-80810	SERVICE KIT, INCLUDES 1E, 1F, 1H	1
1E	207-80800	IMPELLER, SUPER 3 SERIES JABSCO PUMP	1
1F	207-00062	SCREW, JABSCO PUMP ENDCOVER PLATE	6
1G	207-00138	PLATE, JABSCO PUMP BRASS ENDCOVER	1
1H	207-62600	GASKET, JABSCO PUMP ENDCOVER PLATE	1
NA	207-06377	OIL SEAL, JABSCO PUMP	1
NA	207-80780/SHAFT	SHAFT TO SUIT S3 JABSCO PUMP	1

Ref No	Part Number	Part Name	Quantity
NA	207-07415	S3 JOHNSON SEA WATER PUMP –FROM SEPT 2009	1
NA	207-07559	JOHNSON SEA WATER PUMP IMPELLER KIT	1
NA	207-07560	JOHNSON SEA WATER PUMP SERVICE KIT	1

DRAWING 100-05301 (PAGE 4 of 5)

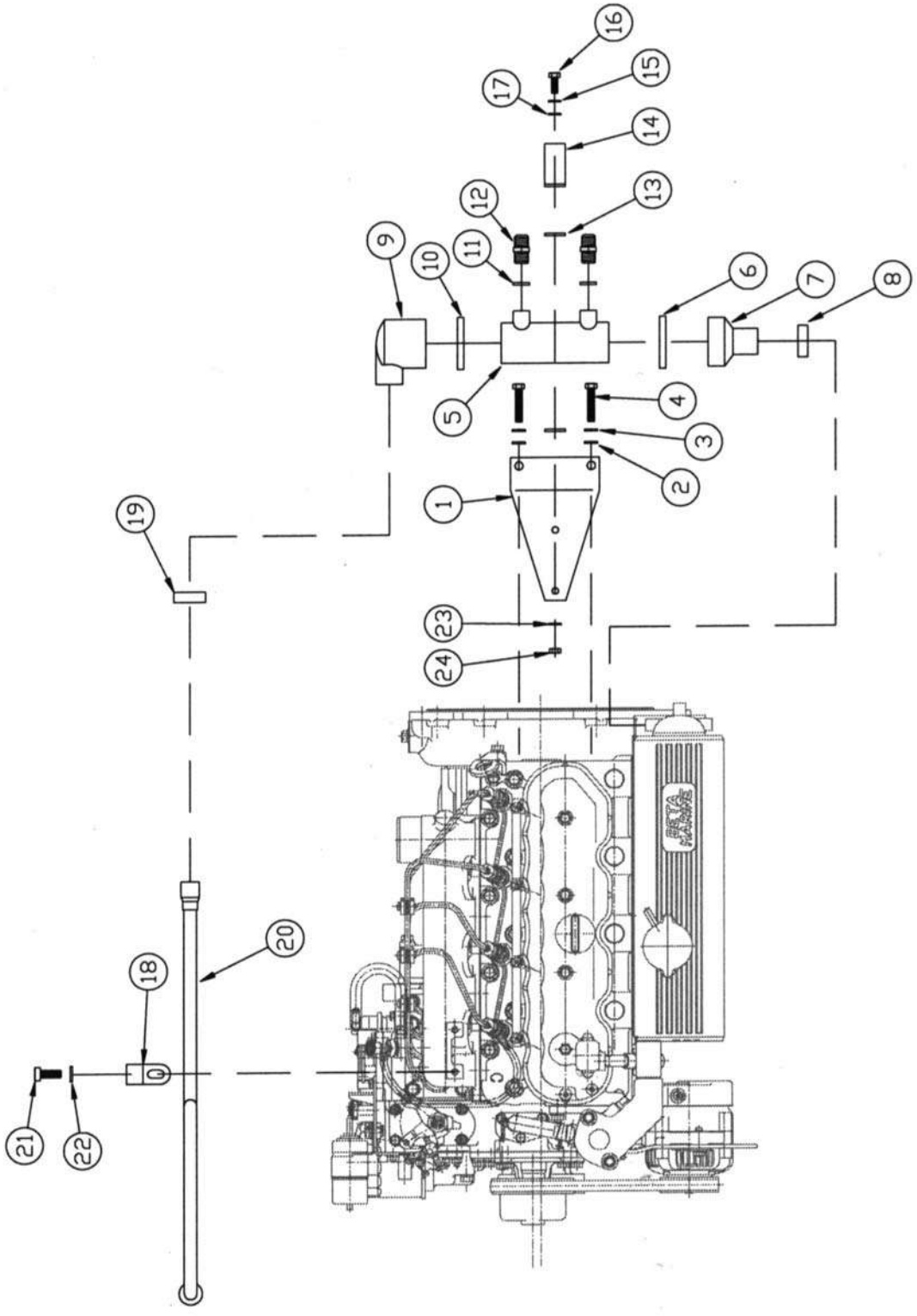

DRAWING 100-05301

Beta43, Beta50 & Beta60 WATER SYSTEM FOR HYDRAULIC GEARBOXES

(PAGE 4 of 5)

Ref No	Part Number	Part Name	Quantity
01	202-02860	SUPER 3 SERIES H/E DC60 OIL COOLER BRACKET	1
02	217-99341	M12 FLAT WASHER	2
03	217-99342	M12 SPRING WASHER	2
04	217-99351	M12 x 30 x 1.25mm SET	2
05	210-91630	OIL COOLER DC60-YDA (INC 06, 07, 09, 10)	1
06	212-00117	STAINLESS STEEL HOSE CLIP 45-60mm	1
07	210-00171	ENDCAP 22mm STRAIGHT OUTLET	1
08	212-98464	STAINLESS STEEL HOSE CLIP 22-30mm	1
09	210-00172	ENDCAP 22mm 90° INLET	1
10	212-00117	STAINLESS STEEL HOSE CLIP 45-60mm	1
11	212-99379	1/2"BSP COPPER WASHER	2
12	212-99383	½”BSP x 3/8”BSP M-M ADAPTOR	2
13	212-01544	RUBBER STRIP 3mm T x 25mm W x 80mm L	2
14	210-92260	OIL COOLER CLAMP (TO AUGUST 2007	1
	212-06547	OIL COOLER CLAMP (FROM AUGUST 2007)	2
15	217-99292	M8 SPRING WASHER	2
16	217-99301	M8 x 35mm SET	2
17	217-99293	M8 FLAT WASHER	2
18	212-02808	PIPE FITTING CLIP (N°4)	1
19	212-98464	STAINLESS STEEL HOSE CLIP 22-30mm	1
20	209-03204	SUPER 3, 4 CYLINDER RAW WATER COOLING PIPE –DC60 OIL COOLER (HYDRAULIC GEARBOX)	1
21	217-99335	M10 x 25mm FINE SOCKET CAP SCREW	1
22	217-99321	M10 FLAT WASHER	1
23	217-99293	M8 FLAT WASHER	2
24	217-99296	M8 NYLOC	2

DRAWING 100-05301 (PAGE 5 of 5)

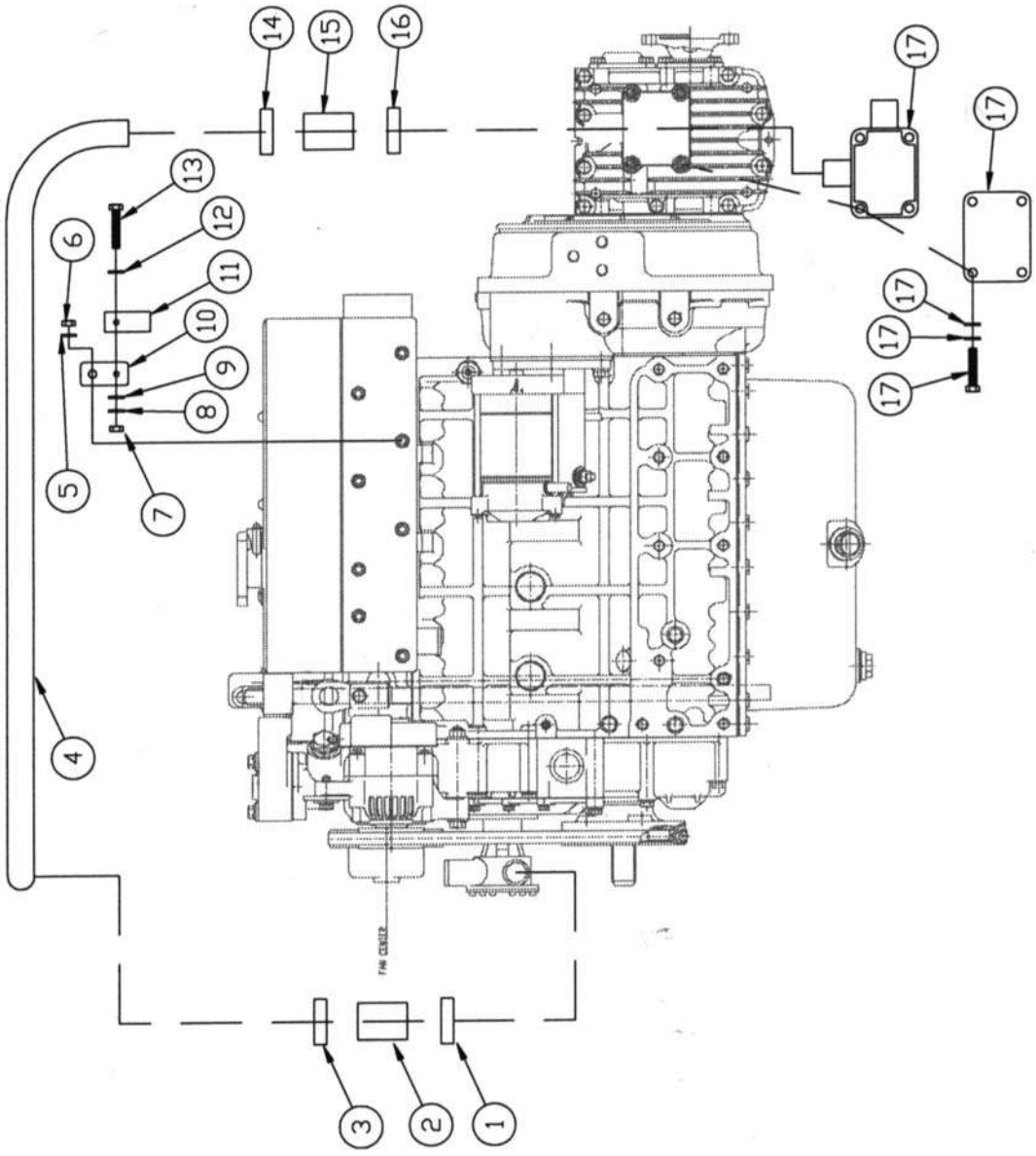

DRAWING 100-05301

Beta50 WATER SYSTEM FOR HBW150 WATER COOLED GEARBOX

(PAGE 5 of 5)

Ref No	Part Number	Part Name	Quantity
01	212-00066	STAINLESS STEEL HOSE CLIP 30-40mm	2
02	218-99251	1 1/8" I/D BLACK RADIATOR HOSE	0.06m
03	212-00066	STAINLESS STEEL HOSE CLIP 30-40mm	2
04	209-03177	Beta50 RAW WATER COOLING PIPE –HBW 150 OIL COOLER (MECHANICAL GEARBOX)	1
05	217-99293	M8 FLAT WASHER	2
06	217-99296	M8 NYLOC	2
07	217-99295	M8 FULL NUT	2
08	217-99292	M8 SPRING WASHER	2
09	217-99293	M8 FLAT WASHER	2
10	202-03215	RAW WATER PIPE BRACKET, Beta50 –HBW150	2
11	212-02808	PIPE CLAMP	2
12	217-99293	M8 FLAT WASHER	2
13	217-99299	M8 x 25mm SET	2
14	212-00066	STAINLESS STEEL HOSE CLIP 30-40mm	1
15	209-91770	28mm I/D ELBOW, BLACK RADIATOR HOSE	1
16	212-00066	STAINLESS STEEL HOSE CLIP 30-40mm	1
17	210-00089	OIL COOLER –HBW150 GEARBOX	1

DRAWING 100-05302 (PAGE 1 of 5)

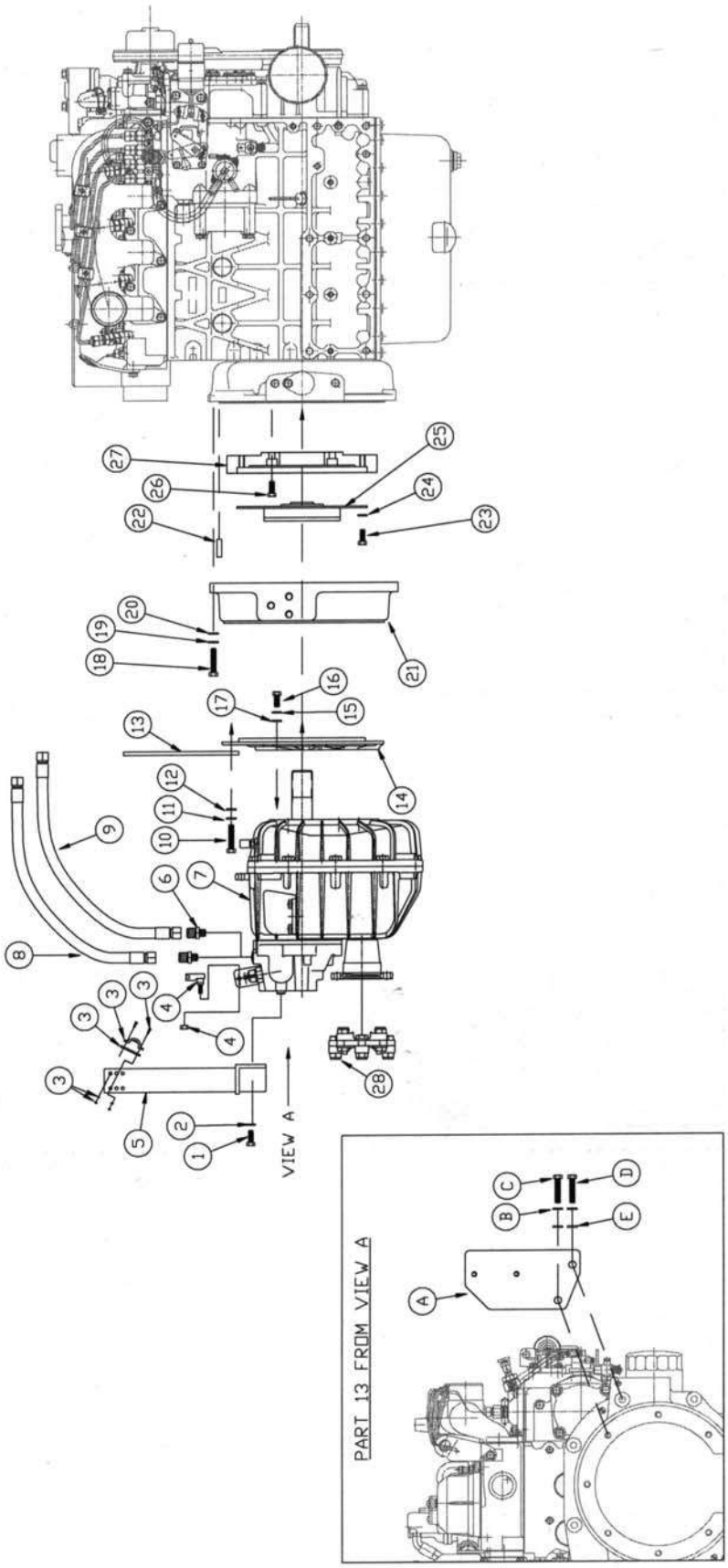

DRAWING 100-05302

Beta43, Beta50 & Beta60 HURTH HSW250 / ZF25H GEARBOX ASSEMBLY

(PAGE 1 of 5)

Ref No	Part Number	Part Name	Quantity
01	217-99360	3/8UNC x 1" SET	2
02	217-99359	3/8UNC SPRING WASHER	2
03	212-99241/01	GEARBOX MORSE CABLE CLAMP	1
04	212-99240/01	GEARBOX MORSE CABLE BALL JOINT	1
05	202-05406	HSW250 / ZF25H MORSE GEAR BRACKET	1
06	212-01018	3/8"BSPT x 3/8"BSP M-M ADAPTOR	2
07	204-98890 204-01191 204-00743 204-01148	HURTH HSW250 R1.97 / ZF25H R1.97 HURTH HSW250 R2.8 / ZF25H R2.8 HURTH HSW250 'A' R1.93 / ZF25H 'A' R1.93 HURTH HSW250 'A' R2.71 / ZF25H 'A' R2.71	1
08	210-94220	HYDRAULIC OIL PIPE 3/8"BSP 450mm 90°-ST	1
09	210-94220	HYDRAULIC OIL PIPE 3/8"BSP 450mm 90°-ST	1
10	217-99326 217-99325	M10 x 30mm SET (TOP) M10 x 25mm SET (BOTTOM)	3 4
11	217-99320	M10 SPRING WASHER	7
12	217-99321	M10 FLAT WASHER	7
13	202-97590	SUPER 3 –HSW250 SUMP DRAIN PUMP BRACKET	1
14	205-85810	HURTH HSW250 / ZF25H - B/W ADAPTOR	1
15	217-99320	M10 SPRING WASHER (NOT ON BOTTOM BOLTS)	4
16	217-99325	M10 x 25mm SET	6
17	217-99321	M10 FLAT WASHER	6
18	217-99330	M10 x 40 x 1.25mm SET	6
19	217-99320	M10 SPRING WASHER	6
20	217-99321	M10 FLAT WASHER	6
21	208-62300	Beta43 / Beta50 FLYWHEEL HOUSING	1
	208-62300	Beta60 FLYWHEEL HOUSING	
22	217-99339	DOWEL 10mm DIAMETER x 20mm OAL	2
23	217-99311	M8 x 25mm SOCKET CAP SCREW	6
24	217-99293	M8 FLAT WASHER	6
25	206-97790	DS22 DAMPER, SAE 6.5 -TO JULY 2006	1
	206-05185	VULCAN DAMPER, MACHINED TO SAE 6.5 -FROM JULY 2006	
26	217-99349	M12 x 20mm SOCKET CAP SCREW	6
27	201-01630	Beta43/50– DS22 INERTIA RING SAE6.5 (TO JULY 2006)	1
	201-90330	Beta43/50 STD INERTIA RING SAE6.5 (FROM JULY 2006)	
	201-07145	Beta60 INERTIA RING	
28	212-01430	FLEXIBLE COUPLING	1

Ref No	Part Number	Part Name	Quantity
A	N/A	SEE 13 ABOVE	1
B	217-99320	M10 SPRING WASHER	2
C	N/A	SEE 10 ABOVE	1
D	217-02760	M10 x 100 x 1.25mm SET	1
E	217-99321	M10 FLAT WASHER	8

DRAWING 100-05302 (PAGE 2 of 5)

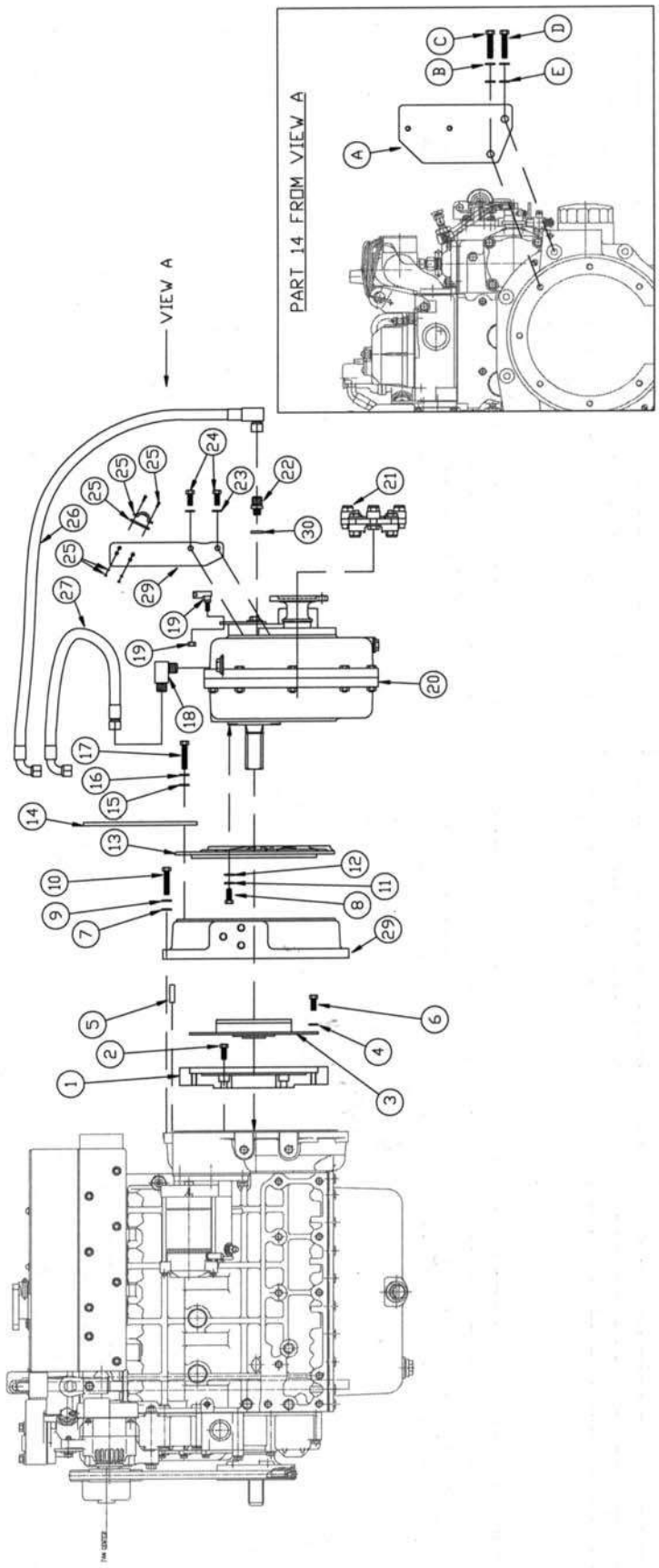

DRAWING 100-05302

Beta43 / Beta50 NEWAGE PRM 150 GEARBOX ASSEMBLY

(PAGE 2 of 5)

Ref No	Part Number	Part Name	Quantity
01	201-90330	SUPER 3 – DS15 INERTIA RING SAE 6.5	1
02	217-01237	M12 x 30mm SOCKET CAP SCREW	6
03	206-02094	PRM150 DS15 DRIVEPLATE SAE6.5 –TO FEB 2004	1
	206-03981	PRM150 DS15 DRIVEPLATE FROM FEB 2004-DEC09	
	206-07584	PRM150 43-AG-60 DAMPER FROM DEC2009	
04	217-99293	M8 FLAT WASHER	6
05	217-99339	DOWEL 10mm DIAMETER x 20mm OAL	2
06	217-99299	M8 x 25mm SET –TO DEC 2009	6
	217-99298	M8 x 20mm SET –FROM DEC 2009	
07	217-99321	M10 FLAT WASHER	6
08	217-99311	M8 x 25mm SOCKET CAP SCREW	6
09	217-99320	M10 SPRING WASHER	6
10	217-99330	M10 x 40 x 1.25mm SET	6
11	217-99292	M8 SPRING WASHER	6
12	217-99293	M8 FLAT WASHER	6
13	205-92480	PRM80 / PRM120 –BORG WARNER ADAPTOR	1
14	202-97590	SUPER 3 –PRM150 SUMP DRAIN PUMP BRACKET	1
15	217-99321	M10 FLAT WASHER	7
16	217-99320	M10 SPRING WASHER	7
17	217-99326	M10 x 30mm SET (TOP)	3
	217-99325	M10 x 25mm SET (BOTTOM)	4
18	210-91940	1/4”BSPT x 3/8”BSP M-M 90° ADAPTOR	1
19	212-99240/01	GEARBOX MORSE CABLE BALL JOINT	1
20	204-91920	NEWAGE PRM 150D2 GEARBOX	1
	204-91700	NEWAGE PRM 150D3 GEARBOX (NOT Beta50 / 60)	
21	212-01430	FLEXIBLE COUPLING	1
22	210-91940	1/4”BSPT x 3/8”BSP M-M 90° ADAPTOR	1
23	217-99292	M8 SPRING WASHER	2
24	217-99301	M8 x 30mm SET	2
25	212-99241/01	GEARBOX MORSE CABLE CLAMP	1
26	210-94220	HYDRAULIC OIL PIPE 3/8"BSP 450mm 90°-ST	1
27	210-94220	HYDRAULIC OIL PIPE 3/8"BSP 450mm 90°-ST	1
28	202-94100	PRM150 MORSE GEAR BRACKET	1
29	208-62300	Beta43 / Beta50 FLYWHEEL HOUSING	1

Ref No	Part Number	Part Name	Quantity
A	N/A	SEE 14 ABOVE	1
B	217-99320	M10 SPRING WASHER	2
C	N/A	SEE 17 ABOVE	1
D	217-02760	M10 x 100 x 1.25mm SET	1
E	217-99321	M10 FLAT WASHER	8

Prices and specifications are subject to amendment without notice. Information given is subject to our current conditions of tender and sale. In all cases please quote ***Beta Marine WOC 'K' number*** and Engine Type. Beta Marine will not be held responsible for incorrect supply without this information.

DRAWING 100-05302 (PAGE 3 of 5)

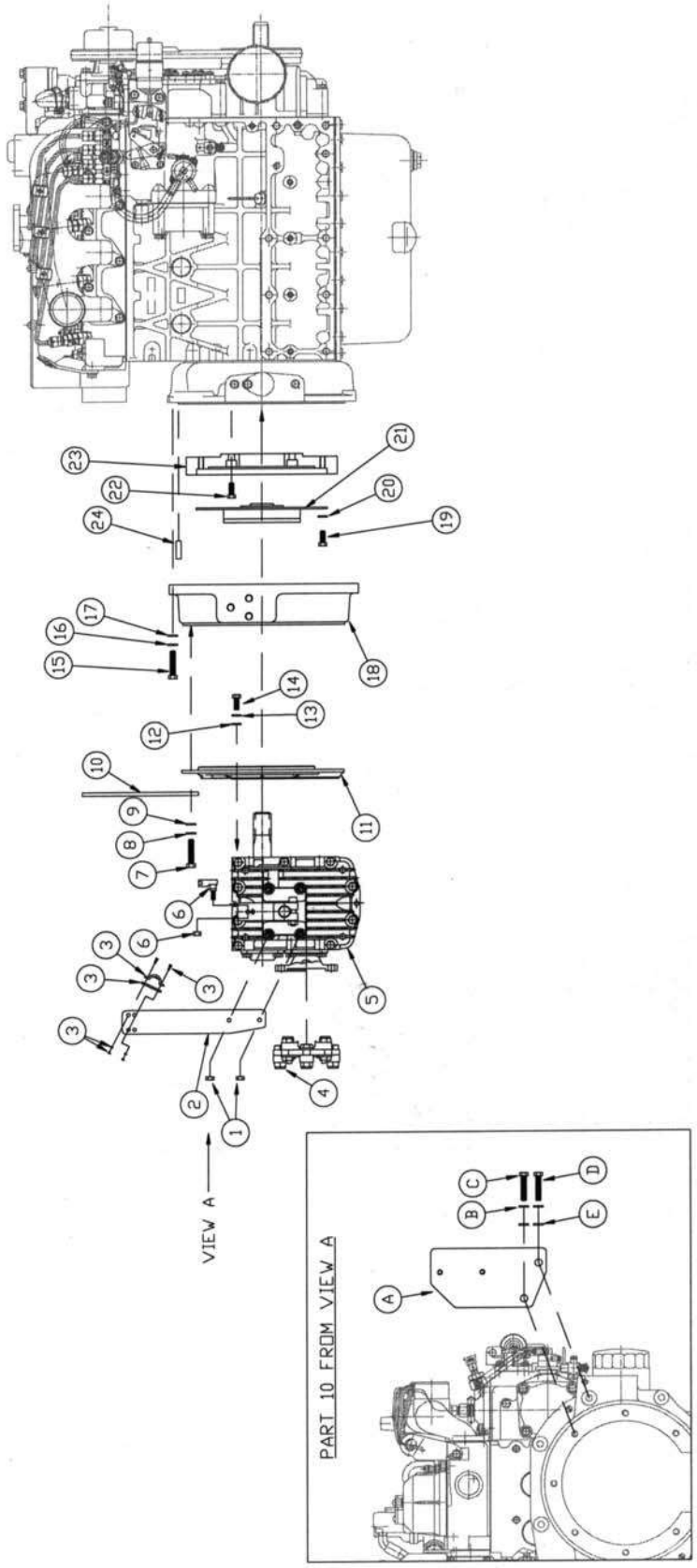

DRAWING 100-05302

Beta43 & Beta50 HURTH 125 / 150 (ZF12M / ZF15M) GEARBOX ASSEMBLY

(PAGE 3 of 5)

Ref No	Part Number	Part Name	Quantity
01	217-99295	M8 NUT	2
02	202-61582	HURTH 50-150 (ZF5M-15M) GEAR BRACKET	1
03	212-99241/01	GEARBOX MORSE CABLE CLAMP	1
04	212-01430	FLEXIBLE COUPLING (NOT 'V' DRIVE GEARBOX)	1
05	204-85860 204-85870 204-00767 204-85875	HBW125 R2 (ZF12 M R2) (BV1903 ONLY) HBW150 R2 (ZF15 M R2) HBW150 V R2 (ZF15 MIV R2) HBW150 A R2 (ZF15 MA R2)	1
06	212-99240/01	GEARBOX MORSE CABLE BALL JOINT	1
07	217-99326 217-99325	M10 x 30mm SET (TOP) M10 x 25mm SET (BOTTOM)	3 4
08	217-99320	M10 SPRING WASHER	7
09	217-99321	M10 FLAT WASHER	7
10	202-97590	SUPER 3 –HBW125 SUMP DRAIN PUMP BRACKET	1
11	205-60990	HBW125 / 150 –BORG WARNER ADAPTOR	1
12	217-99293	M8 FLAT WASHER	6
13	217-99292	M8 SPRING WASHER	4
14	217-99299	M8 x 25mm SET	6
15	217-99330	M10 x 40 x 1.25mm SET	6
16	217-99320	M10 SPRING WASHER	6
17	217-99321	M10 FLAT WASHER	6
18	208-62300	Beta43 / Beta50 FLYWHEEL HOUSING	1
	208-07157	Beta60 FLYWHEEL HOUSING	
19	217-99311	M8 x 25mm SOCKET CAP SCREW	6
20	217-99293	M8 FLAT WASHER	6
21	206-00895 206-91950	DRIVEPLATE 43-AC-60 (HBW125 & HBW150V) DRIVEPLATE 22-B-60 (HBW150 & 150A)	1
22	217-01237	M12 x 30mm SOCKET CAP SCREW	6
23	201-90330	SUPER 3 – DS15 INERTIA RING SAE 6.5	1
24	217-99339	DOWEL 10mm DIAMETER x 20mm OAL	2

Ref No	Part Number	Part Name	Quantity
A	N/A	SEE 10 ABOVE	1
B	217-99320	M10 SPRING WASHER	2
C	N/A	SEE 7 ABOVE	1
D	217-02760	M10 x 100 x 1.25mm SET	1
E	217-99321	M10 FLAT WASHER	8

Prices and specifications are subject to amendment without notice. Information given is subject to our current conditions of tender and sale. In all cases please quote ***Beta Marine WOC 'K' number*** and Engine Type. Beta Marine will not be held responsible for incorrect supply without this information.

DRAWING 100-05302 (PAGE 4 of 5)

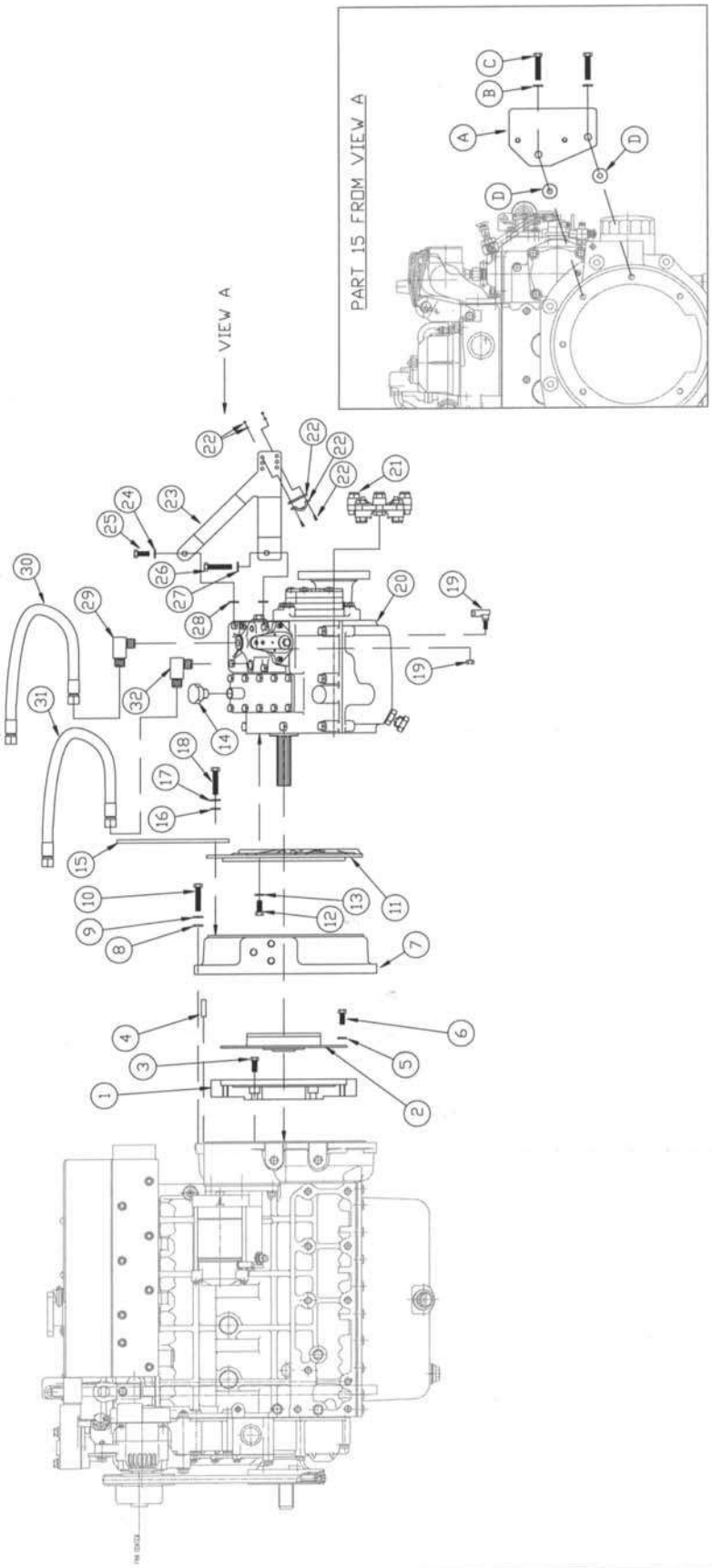

DRAWING 100-05302

Beta43, Beta50 & Beta60 NEWAGE PRM260 GEARBOX ASSEMBLY

(PAGE 4 of 5)

Ref No	Part Number	Part Name	Quantity
01	201-90330	Beta43 / Beta50 INERTIA RING	1
	201-07145	Beta60 INERTIA RING	
02	206-02095	DRIVEPLATE DS15 – PRM260 SAE 6.5	1
03	217-01237	M12 x 30mm SOCKET CAP SCREW	6
04	217-99339	DOWEL 10mm DIAMETER x 20mm OAL	2
05	217-99293	M8 FLAT WASHER	6
06	217-99311	M8 x 25mm SOCKET CAP SCREW	6
07	208-62300	Beta43 / Beta50 FLYWHEEL HOUSING	1
	208-07157	Beta60 FLYWHEEL HOUSING	
08	217-99330	M10 x 40 x 1.25mm SET	6
09	217-99320	M10 SPRING WASHER	6
10	217-99321	M10 FLAT WASHER	6
11	205-72820	NEWAGE PRM 260 – BORG WARNER ADAPTOR	1
12	217-99323	M10 NYLOC NUT	5
13	201-01752	M10 STUD	5
14	205-02829	NEWAGE PRM 260 GEARBOX BREATHER CAP	1
15	202-97590	SUPER 3 –PRM260 SUMP DRAIN PUMP BRACKET	1
16	217-99321	M10 FLAT WASHER	7
17	217-99320	M10 SPRING WASHER (NOT ON BOTTOM BOLTS)	4
18	217-99326	M10 x 30mm SET (TOP)	3
	217-99325	M10 x 25mm SET (BOTTOM)	4
19	212-99240/01	GEARBOX MORSE CABLE BALL JOINT	1
20	204-80530	NEWAGE PRM 260 D2 GEARBOX	1
	204-92230	NEWAGE PRM 260 D3 GEARBOX	
21	212-01248	FLEXIBLE COUPLING	1
22	212-99241/01	GEARBOX MORSE CABLE CLAMP	1
23	202-80560	NEWAGE PRM260 MORSE GEAR BRACKET	1
24	217-99292	M8 SPRING WASHER	1
25	217-99357	5/16 UNF x 1 ¼” SET	1
26	217-99358	5/16 UNF x 2 ½” SET	1
27	217-99292	M8 SPRING WASHER	1
28	209-00017	M8 DOWTY WASHER	2
29	212-99388	3/8”BSPT x 3/8”BSP M-M 90° ADAPTOR	1
30	210-94220	HYDRAULIC OIL PIPE 3/8"BSP 450mm 90°-ST	1
31	210-94220	HYDRAULIC OIL PIPE 3/8"BSP 450mm 90°-ST	1
32	212-99388	3/8”BSPT x 3/8”BSP M-M 90° ADAPTOR	1

Ref No	Part Number	Part Name	Quantity
A	N/A	SEE 15 ABOVE	1
B	217-99320	M10 SPRING WASHER	2
C	N/A	SEE 18 ABOVE	1
D	201-61801	SPACER, 18mm OAL	2

DRAWING 100-05302 (PAGE 5 of 5)

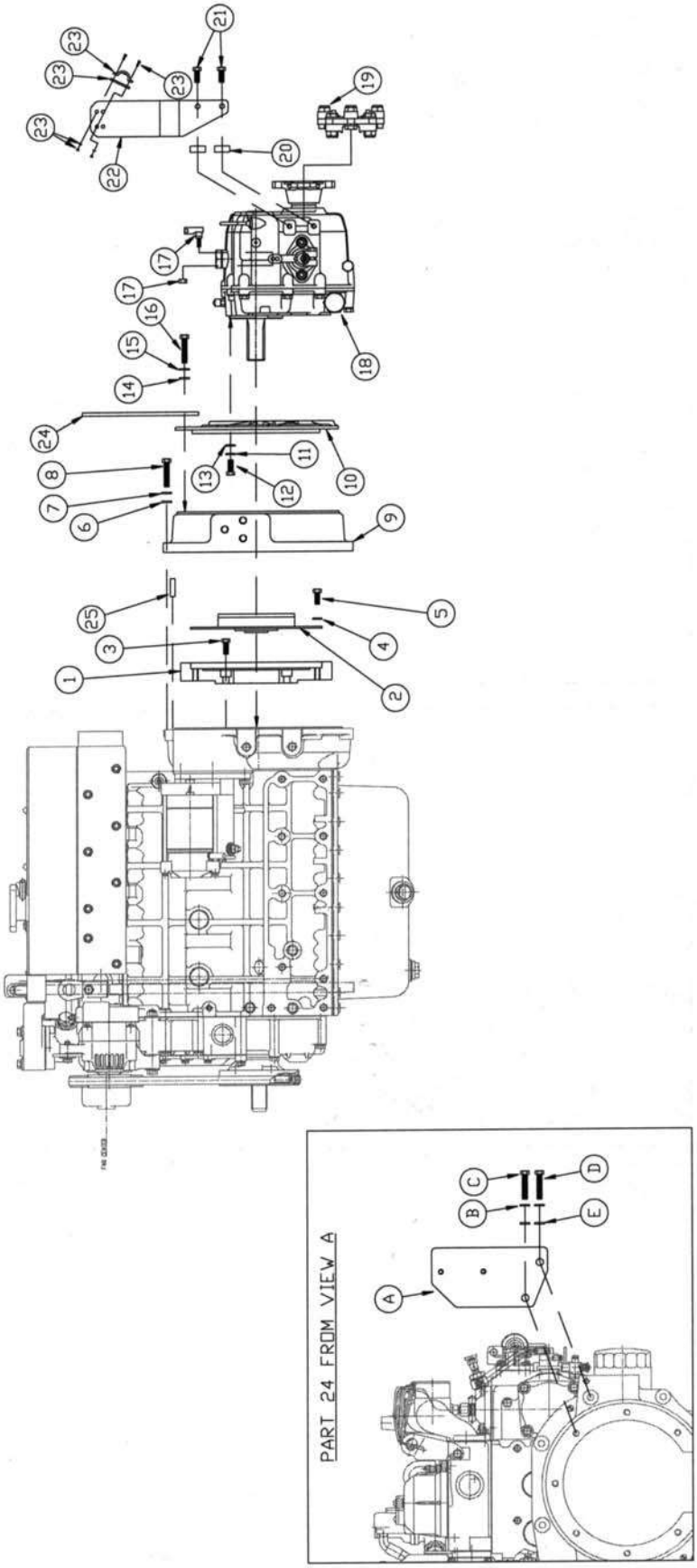

DRAWING 100-05302

Beta43 TECHNODRIVE TMC60 GEARBOX ASSEMBLY

(PAGE 5 of 5)

Ref No	Part Number	Part Name	Quantity
01	201-90330	SUPER 3 – DS15 INERTIA RING SAE 6.5	1
02	206-91950	DRIVEPLATE 22-B-60	1
03	217-01237	M12 x 30mm SOCKET CAP SCREW	6
04	217-99293	M8 FLAT WASHER	6
05	217-99311	M8 x 25mm SOCKET CAP SCREW	6
06	217-99321	M10 FLAT WASHER	6
07	217-99320	M10 SPRING WASHER	6
08	217-99330	M10 x 40 x 1.25mm SET	6
09	208-62300	SUPER 3 SERIES FLYWHEEL HOUSING	1
10	205-60990	TMC60 –BORG WARNER ADAPTOR	1
11	217-99292	M8 SPRING WASHER	4
12	217-99299	M8 x 25mm SET	6
13	217-99293	M8 FLAT WASHER	6
14	217-99321	M10 FLAT WASHER	7
15	217-99320	M10 SPRING WASHER	7
16	217-99326 217-99325	M10 x 30mm SET (TOP) M10 x 25mm SET (BOTTOM)	3 4
17	212-99240/01	GEARBOX MORSE CABLE BALL JOINT	1
18	204-91680	TECHNODRIVE TMC 60 GEARBOX	1
19	212-01430	FLEXIBLE COUPLING	1
20	201-01204	SPACER 7mm OAL	2
21	217-02585	M8 x 25mm COUNTERSUNK SET SCREW	2
22	202-05129	TMC 60 MORSE GEAR BRACKET	1
23	212-99241/01	GEARBOX MORSE CABLE CLAMP	1
24	202-97590	SUPER 3 –TMC60 SUMP DRAIN PUMP BRACKET	1
25	217-99339	DOWEL 10mm DIAMETER x 20mm OAL	2

Ref No	Part Number	Part Name	Quantity
A	N/A	SEE 24 ABOVE	1
B	217-99320	M10 SPRING WASHER	2
C	N/A	SEE 16 ABOVE	1
D	217-02760	M10 x 100 x 1.25mm SET	1
E	217-99321	M10 FLAT WASHER	8

Prices and specifications are subject to amendment without notice. Information given is subject to our current conditions of tender and sale. In all cases please quote ***Beta Marine WOC 'K' number*** and Engine Type. Beta Marine will not be held responsible for incorrect supply without this information.

DRAWING 100-05303 (PAGE 1 of 1)

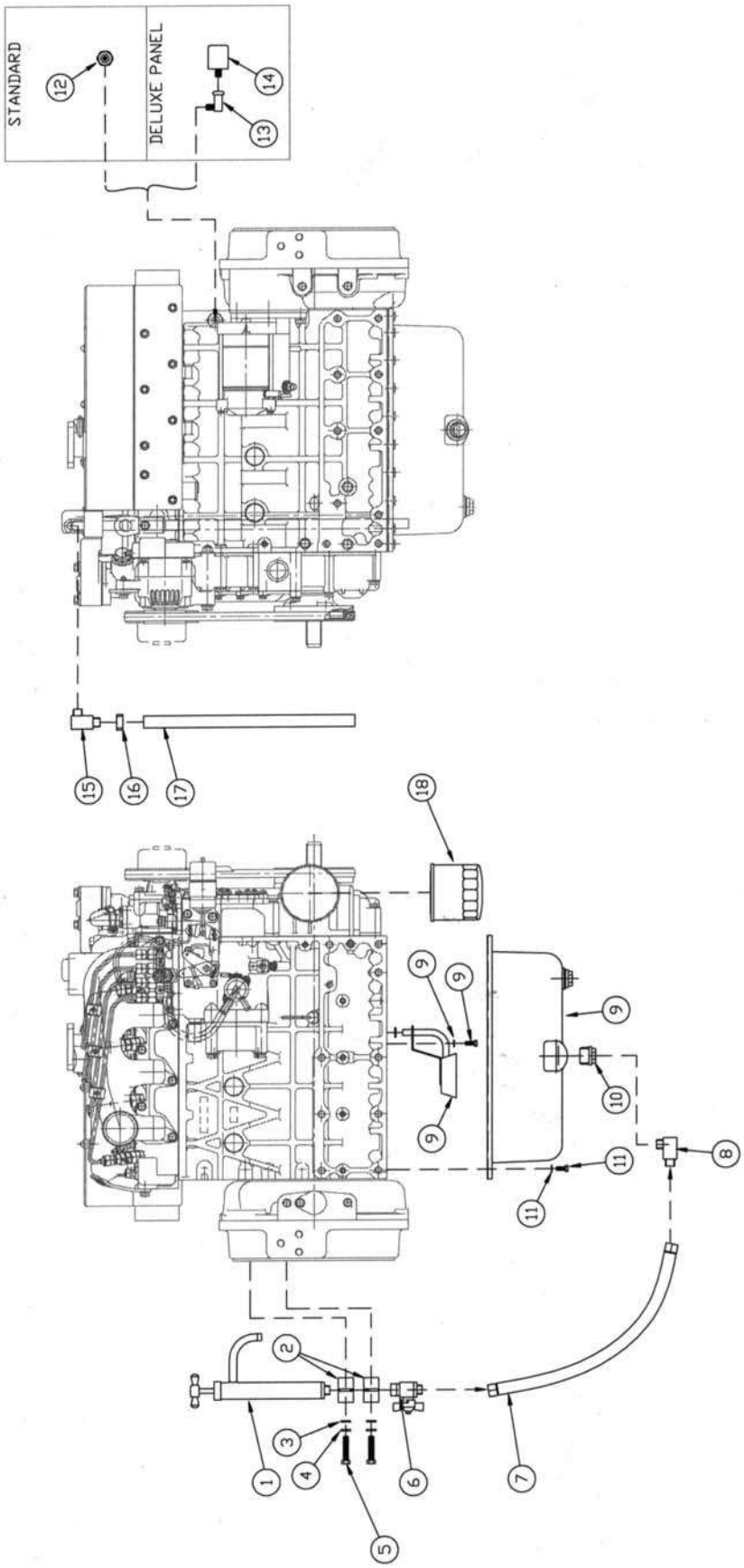

DRAWING 100-05303

Beta43, Beta50 & Beta60 OIL SYSTEM WITH STANDARD SUMP

(PAGE 1 of 1)

Ref No	Part Number	Part Name	Quantity
01	210-80061	SUMP DRAIN PUMP	1
02	212-00793	TYPE 14 PUMP CLAMP	2
03	217-99294	M8 PENNY WASHER	2
04	217-99292	M8 SPRING WASHER	2
05	217-99303	M8 x 50mm SET	2
06	210-94530	3/8"BSP SUMP DRAIN PUMP TAP	1
07	210-94200	HYD PIPE 3/8BSP 640mm STR-STR	1
08	210-91940	1/4x3/8"BSP M-M BLOCK ELBOW	1
09	600-01129 600-00571	SUPER 3 SERIES, 4 CYLINDER STANDARD SUMP GASKET, SUPER3 SUMP	1 1
10	201-02318	¼"BSP SUMP DRAIN PUMP TAPPING –STD SUMP	1
	201-02318	M16x3/8 SUMP PUMP TAPPING –SHALLOW SUMP	
11	600-02845	SUMP FLANGE BOLT	24
12	600-62670	OIL PRESSURE SWITCH	1
13	212-99395	1/8"BSPTM x 1/8"BSPF GALV ELBOW	1
14	200-94350	DELUXE OIL PRESSURE SENDER	1
15	212-99378	¼" BSP 90° M-M COMPACT ADAPTOR ***–OPEN BREATHER ENGINES ONLY TO JANUARY 2006***	1
16	217-99244	5/8" 'O' CLIP ***–OPEN BREATHER ENGINES ONLY TO JANUARY 2006***	1
17	600-01717	SUPER 3 SERIES BREATHER PIPE ***–OPEN BREATHER ENGINES ONLY TO JANUARY 2006***	1
18	211-70510/02	SUPER 3 SERIES OIL FILTER	1

Beta43, Beta50 & Beta60 OIL SYSTEM WITH SHALLOW SUMP OPTION

ALL AS ABOVE, EXCEPT AS BELOW:

Ref No	Part Number	Part Name	Quantity
09	AK/S3/4/4/003	SHALLOW OIL PAN KIT COMPLETE WITH GASKETS, STRAINER & DRAIN PLUG, SUPER 3	1
09	600-01548	OIL PAN, SUPER BV19/2203 SHALLOW	1
09	600-01549	OIL FILTER, S3 SHALLOW SUMP	1
09	600-01550	DRAIN PLUG, S3 SHALLOW SUMP	1
09	600-01551	DRAIN PLUG, S3 SHALLOW SUMP	1
09	600-01552	GASKET COPPER, S3 SHALLOW SUMP	1
09	600-01553	GASKET COPPER, S3 SHALLOW SUMP	1
09	600-00571	GASKET, SUPER3 SHALLOW SUMP	1

DRAWING 100-05304 (PAGE 1 of 1)

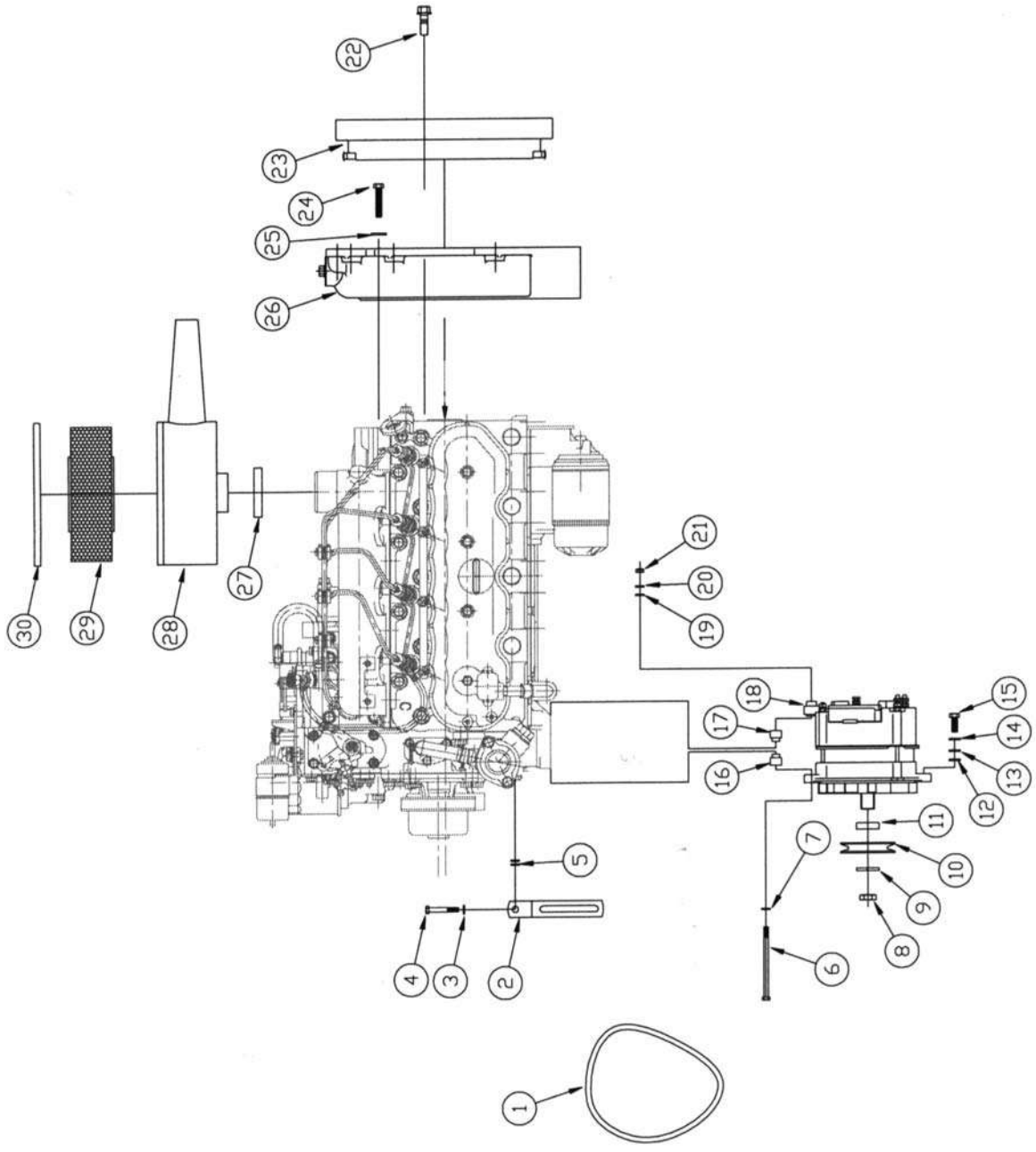

DRAWING 100-05304

Beta43, Beta50 & Beta60 ALTERNATOR, FLYWHEEL & AIR INTAKE SYSTEM

(PAGE 1 of 1)

Ref No	Part Number	Part Name	Quantity
01	214-96830	DRIVEBELT (Beta43 to Sept2008, Beta50 to July2007)	1
	214-99223	DRIVEBELT (Beta43 from Sept 2008 to April2011, Beta50 From July2007& Beta60 to April 2011)	
	214-87050	DRIVEBELT (All from April 2011)	
02	202-96260	SUPER 3 SERIES ALTERNATOR ARM	1
03	217-99292	M8 SPRING WASHER	1
04	217-99306	M8 x 80mm SET (MODIFIED TO 75mm LONG)	1
05	217-99293	M8 FLAT WASHER	3
06	217-99308	M8 x 130mm BOLT	1
07	217-99293	M8 FLAT WASHER	1
08	N/A	PART OF 65 AMP ALTERNATOR –**SEE 18**	
09	N/A	PART OF 65 AMP ALTERNATOR –**SEE 18**	
10	200-91730	ISKRA PULLEY (A SECTION FOR SUPER 3)	1
11	200-91740	ISKRA SPACER (THICK)	1
12	217-99294	M8 PENNY WASHER	1
13	217-99294	M8 PENNY WASHER	1
14	217-99292	M8 SPRING WASHER	1
15	217-99299	M8 x 25mm SET	1
16	201-58920	SUPER 3 -65 AMP SHORT ALTERNATOR SPACER	1
17	201-58920	SUPER 3 -65 AMP SHORT ALTERNATOR SPACER	1
18	200-01155	12VOLT 65AMP ALTERNATOR	1
19	217-99293	M8 FLAT WASHER	1
20	217-99292	M8 SPRING WASHER	1
21	217-99295	M8 NUT	1
22	600-02102	BOLT, FLYWHEEL Beta43 & Beta50	6
	600-07154	BOLT, FLYWHEEL Beta60	
23	600-02267	Beta43 & Beta50 FLYWHEEL	1
	600-07153	Beta60 FLYWHEEL	
24	217-99351	M12 x 30 x 1.25mm SET	11
25	217-99342	M12 SPRING WASHER	11
26	600-03192	Beta43 & Beta50 FLYWHEEL HOUSING BACKPLATE	1
	600-07155	Beta60 FLYWHEEL HOUSING BACKPLATE	
27	212-98460	HEAVY DUTY CLAMP 56-59mm	1
28	211-93700	AIR FILTER ASSEMBLY (INC 29 & 30) 3 CLAMP TYPE	N/A
	211-08131	AIR FILTER ASSEMBLY (INC 29 & 30) WINGNUT TYPE	1
29	211-61831	AIR FILTER ELEMENT (3 CLAMP TYPE TO DEC 2010)	1
	211-08133	AIR FILTER ELEMENT (WINGNUT TYPE FROM DEC 2010)	
30	N/A	AIR FILTER ASSEMBLY COVER –**SEE 28**	

DRAWING 100-05305 (PAGE 1 of 2)

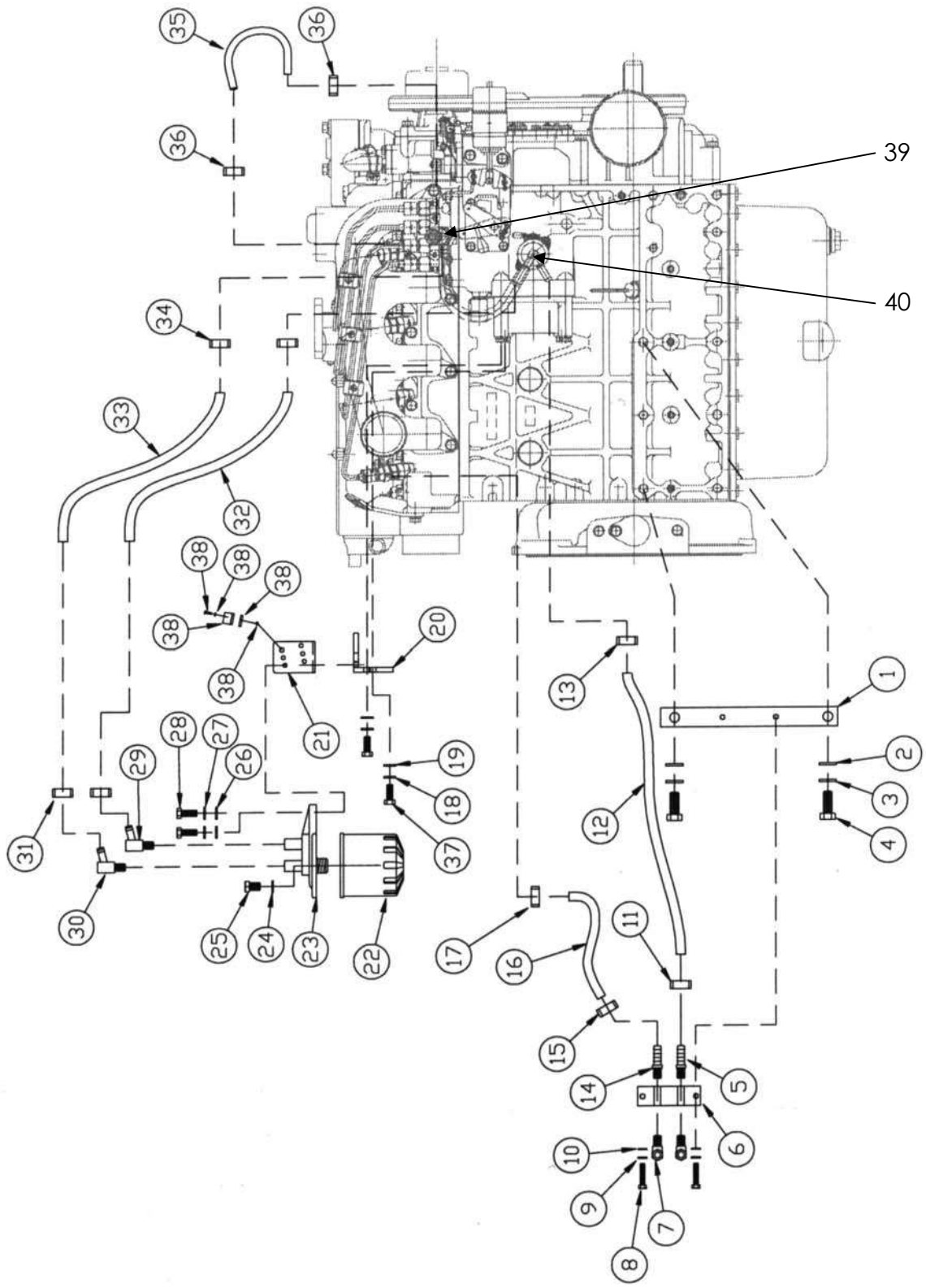

DRAWING 100-05305

Beta43, Beta50 & Beta60 HEAT EXCHANGE FUEL SYSTEM

(PAGE 1 of 2)

Ref No	Part Number	Part Name	Quantity
01	202-03057	FUEL BLOCK BRACKET, SUPER 3 H/E	1
02	217-99341	M12 FLAT WASHER	2
03	217-99342	M12 SPRING WASHER	2
04	217-99351	M12 x 30 x 1.25mm SET	2
05	212-99253	¼"BSPT MALE x 8mm HOSE TAIL	1
06	202-01460	FUEL CONNECTION BLOCK	1
07	212-97114 (212-99253)	8mm x1/4"BSPT MALE COMPRESSION ELBOW (or ¼"BSPT MALE x 8mm HOSE TAIL –USA ONLY)	2 (2)
08	217-99283	M6 x 30mm SET	2
09	217-99275	M6 SPRING WASHER	2
10	217-99276	M6 FLAT WASHER	2
11	212-02826	STAINLESS STEEL HOSE CLIP TYPE 15	1
12	212-02423	FUEL HOSE 8mm BORE -ISO7480 CLASS A1	0.33m
13	212-02826	STAINLESS STEEL HOSE CLIP TYPE 15	1
14	212-02835	¼"BSPT MALE x 5mm HOSE TAIL	1
15	212-02910	STAINLESS STEEL HOSE CLIP TYPE 12	1
16	218-02827	FUEL HOSE 5mm BORE -ISO7480 CLASS A1	0.36m
17	212-02910	STAINLESS STEEL HOSE CLIP TYPE 12	1
18	217-99292	M8 SPRING WASHER	2
19	217-99293	M8 FLAT WASHER	2
20	202-97630	SUPER 3 SERIES H/E FUEL FILTER BRACKET	1
21	202-05064	SPEED CONTROL MORSE SADDLE BRACKET –TO JULY 2008	1
	202-06194	SPEED CONTROL MORSE SADDLE BRACKET – FROM JULY2008	
22	211-60210	FUEL FILTER	1
23	600-80290	FUEL FILTER ASSEMBLY (COMPLETE WITH HEAD) INCLUDING 09 & 10	1
24	N/A	PART OF FUEL FILTER ASSEMBLY –**SEE 23**	
25	N/A	PART OF FUEL FILTER ASSEMBLY –**SEE 23**	
26	217-99293	M8 FLAT WASHER	2
27	217-99292	M8 SPRING WASHER	2
28	217-99298	M8 x 20mm SET	2
29	N/A	PART OF FUEL FILTER ASSEMBLY –**SEE 23**	
30	N/A	PART OF FUEL FILTER ASSEMBLY –**SEE 23**	
31	212-02826	STAINLESS STEEL HOSE CLIP TYPE 15	2
32	212-02423	FUEL HOSE 8mm BORE -ISO7480 CLASS A1	0.22m
33	212-02423	FUEL HOSE 8mm BORE -ISO7480 CLASS A1	0.21m
34	212-02826	STAINLESS STEEL HOSE CLIP TYPE 15	2
35	218-02827	FUEL HOSE 5mm BORE -ISO7480 CLASS A1	0.29m
36	212-02910	STAINLESS STEEL HOSE CLIP TYPE 12	2
37	217-99305	M8 x 70mm SET	2
38	212-99241/01	SPEED CONTROL MORSE CABLE CLAMP	1
39	600-03233	FUEL BLEED SCREW-SUPER 3 SERIES	1
40	600-80870	FUEL LIFT PUMP, Beta43 & Beta60	1
	600-00633	FUEL LIFT PUMP, Beta50 TO JULY 2007	
	600-80870	FUEL LIFT PUMP, Beta50 FROM JULY 2007	

Prices and specifications are subject to amendment without notice. Information given is subject to our current conditions of tender and sale. In all cases please quote ***Beta Marine WOC 'K' number*** and Engine Type. Beta Marine will not be held responsible for incorrect supply without this information.

DRAWING 100-05305 (PAGE 2 of 2)

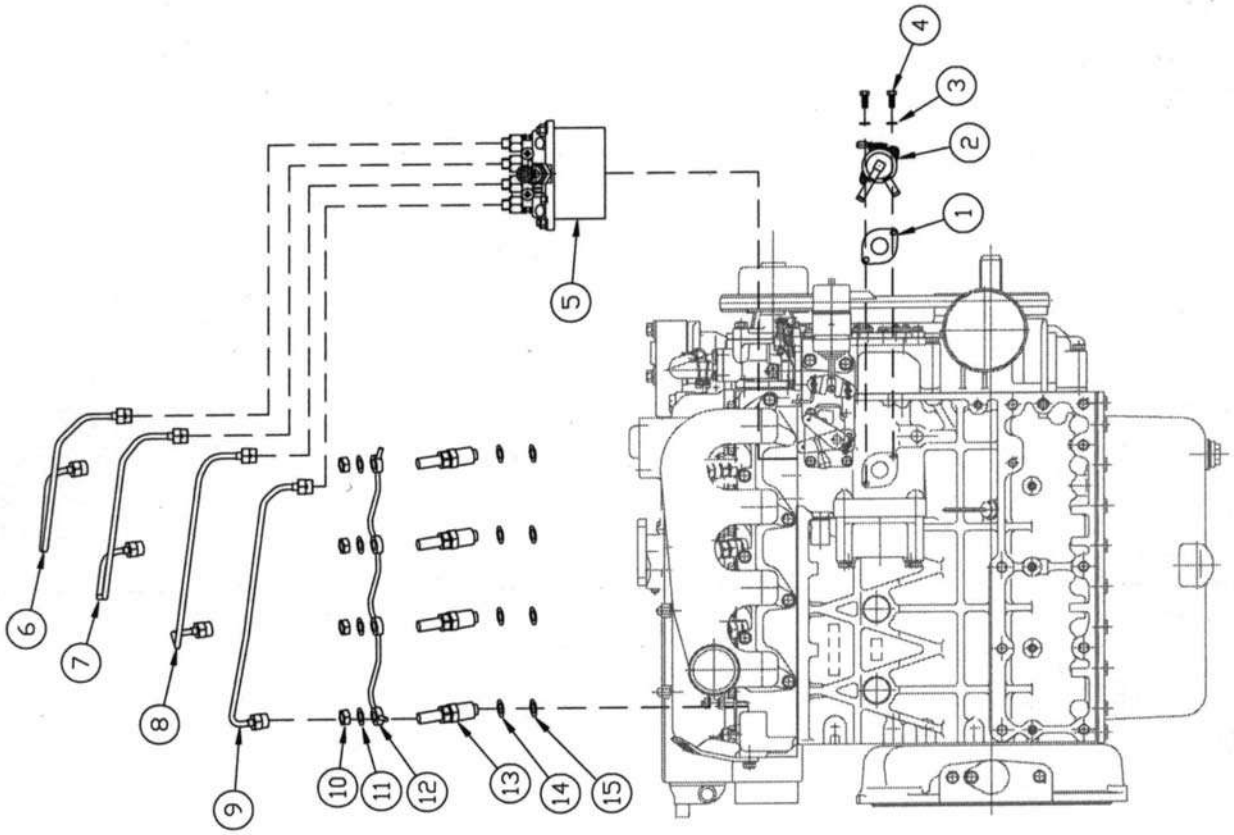

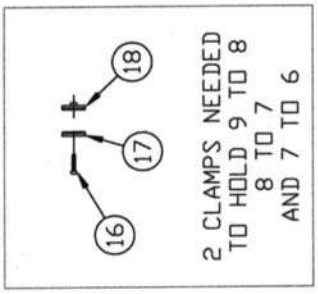

DRAWING 100-05305

Beta43, Beta50 & Beta60 HEAT EXCHANGE FUEL SYSTEM

(PAGE 2 of 2)

Ref No	Part Number	Part Name	Quantity
01	600-00538	GASKET, FUEL LIFT PUMP	1
02	600-80870	FUEL LIFT PUMP –Beta43	1
	600-00633	FUEL LIFT PUMP –Beta50 TO JULY 2007	
	600-80870	FUEL LIFT PUMP –Beta50 & 60 FROM JULY 2007	
03	217-99275	M6 SPRING WASHER	2
04	217-99280	M6 x 16mm SET	2
05	600-03184	Beta43 FUEL INJECTION PUMP –TO SEPT 2008	1
	600-07156	Beta43 FUEL INJECTION PUMP –FROM SEPT 2008	
	600-03184/50	Beta50 FUEL INJECTION PUMP –TO JULY 2007	
	600-07152	Beta50 FUEL INJECTION PUMP –FROM JULY 2007	
	600-07152	Beta60 FUEL INJECTION PUMP	
06	600-01113	INJECTOR PIPE A, (1) OPEN BREATHER ENGINES TO JAN 2006	1
	600-01031	INJECTOR PIPE A, (1) BTM ENGINES FROM JAN 2006	
07	600-01114	INJECTOR PIPE B, (2) OPEN BREATHER ENGINES TO JAN 2006	1
	600-02049	INJECTOR PIPE B, (2) BTM ENGINES FROM JAN 2006	
08	600-01115	INJECTOR PIPE C, (3) OPEN BREATHER ENGINES TO JAN 2006	1
	600-01465	INJECTOR PIPE C, (3) BTM ENGINES FROM JAN 2006	
09	600-01116	INJECTOR PIPE D, (4) OPEN BREATHER ENGINES TO JAN 2006	1
	600-01032	INJECTOR PIPE D, (4) BTM ENGINES FROM JAN 2006	
10	600-00622	NUT, INJECTOR SUPER 3 SERIES	4
11	600-00537	COPPER GASKET, FUEL LEAK OFF RAIL	4
12	600-00548 600-00549 600-00548	FUEL LEAK OFF RAIL Beta43 & Beta60 FUEL LEAK OFF RAIL Beta50 TO JULY 2007 FUEL LEAK OFF RAIL Beta50 FROM JULY 2007	1
13	600-00541	INJECTOR, Beta43 TO SEPTEMBER 2008, COMPLETE (INC 10, 11)	4
	600-02048	INJECTOR, Beta50 TO JULY 2007, COMPLETE (INC 10, 11)	
	600-00542	INJECTOR, Beta43 FROM SEPT 2008, Beta50 FROM JULY 2007 & Beta60, COMPLETE (INC 10, 11)	
14	600-00242	GASKET, INJECTOR SUPER 3 SERIES	4
15	600-01042	HEAT SEAL, INJECTOR	4
16	600-91803	FUEL CLAMP SCREW, WITH WASHER	3
17	600-91802	FUEL CLAMP –NO THREAD	3
18	600-91801	FUEL CLAMP –WITH THREAD	3

DRAWING 100-05306 (PAGE 1 of 1)

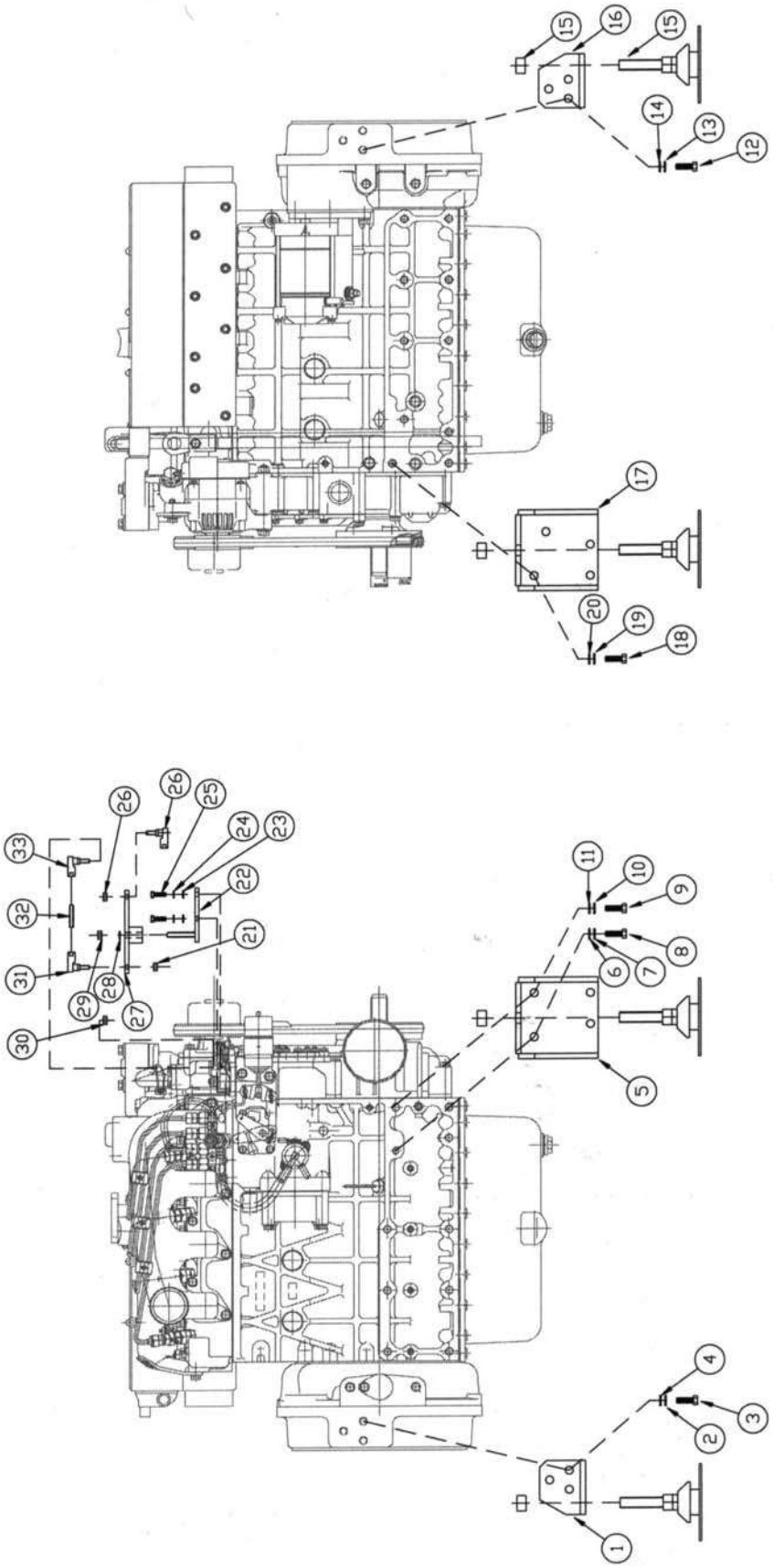

DRAWING 100-05306

Beta43, Beta50 & Beta60 FEET & SPEED CONTROL BRACKETRY

(PAGE 1 of 1)

Ref No	Part Number	Part Name	Quantity
01	202-88660	S3 REAR FOOT **(HANDED PAIR AS 15)**	1
02	217-99342	M12 SPRING WASHER	3
03	217-99345	M12 x 30mm SET	3
04	217-99341	M12 FLAT WASHER	3
05	202-88650	SUPER 3 H/E FRONT FOOT (STAR)	1
06	217-99321	M10 FLAT WASHER	1
07	217-99320	M10 SPRING WASHER	1
08	217-99329	M10 x 25 x 1.25mm SET	1
09	217-99351	M12 x 30 x 1.25mm SET	3
10	217-99342	M12 SPRING WASHER	3
11	217-99341	M12 FLAT WASHER	3
12	217-99345	M12 x 30mm SET	3
13	217-99342	M12 SPRING WASHER	3
14	217-99341	M12 FLAT WASHER	3
15	213-85900/02	45 SHORE FLEXIBLE MOUNT (MOST Beta43 ONLY)	4
	213-96970/01	55 SHORE FLEXIBLE MOUNT Beta43 –PRM260 & ALL Beta50 & Beta60	
16	202-88660	S3 REAR FOOT **(HANDED PAIR AS 01)**	1
17	202-88640	SUPER 3 H/E FRONT FOOT (PORT)	1
18	217-99351	M12 x 30 x 1.25mm SET	4
19	217-99342	M12 SPRING WASHER	4
20	217-99341	M12 FLAT WASHER	4
21	217-99354	1/4" UNF HEX FULL NUT –Beta43 to Sept2008, Beta50 to July2007	1
22	202-05064	SUPER 3 SPEED CONTROL BRACKET –Beta43 to Sept2008, Beta50 to July2007	1
	202-06194	SUPER 3 SPEED CONTROL BRACKET –Beta43 from Sept2008, Beta50 from July2007, Beta60	1
23	217-99276	M6 FLAT WASHER –Beta43 to Sept2008, Beta50 to July2007	2
24	217-99275	M6 SPRING WASHER –Beta43 to Sept2008, Beta50 to July2007	2
25	217-99282	M6 x 25mm SET –Beta43 to Sept2008, Beta50 to July2007	2
26	212-99240/01	SPEED CONTROL MORSE CABLE BALL JOINT –Beta43 to Sept2008, Beta50 to July2007	1
27	202-01396	SUPER 3 SPEED CONTROL LEVER ASSY –Beta43 to Sept2008, Beta50 to July2007	1
28	217-99293	M8 FLAT WASHER –Beta43 to Sept2008, Beta50 to July2007	1
29	217-99296	M8 NYLOC NUT –Beta43 to Sept2008, Beta50 to July2007	1
30	217-99354	1/4" UNF HEX FULL NUT –Beta43 to Sept2008, Beta50 to July2007	1
	217-99354	1/4" UNF HEX FULL NUT –Beta43 from Sept2008, Beta50from July2007 & Beta60	
31	212-92270	SUPER 3 SPEED CONTROL ELBOW –Beta43 to Sept2008, Beta50 to July2007	1
32	217-99355	1/4" UNF THREADED BAR –Beta43 to Sept2008, Beta50 to July2007	0.05m
33	212-92270	SUPER 3 SPEED CONTROL ELBOW –Beta43 to Sept2008, Beta50 to July2007	1
	212-92270	SUPER 3 SPEED CONTROL ELBOW –Beta43 from Sept2008, Beta50from July2007 & Beta60	

DRAWING 100-05466

Beta43, Beta50 & Beta60 WITH 100 AMP ALTERNATOR / BETA CONTROLLER

(PAGE 1 of 1)

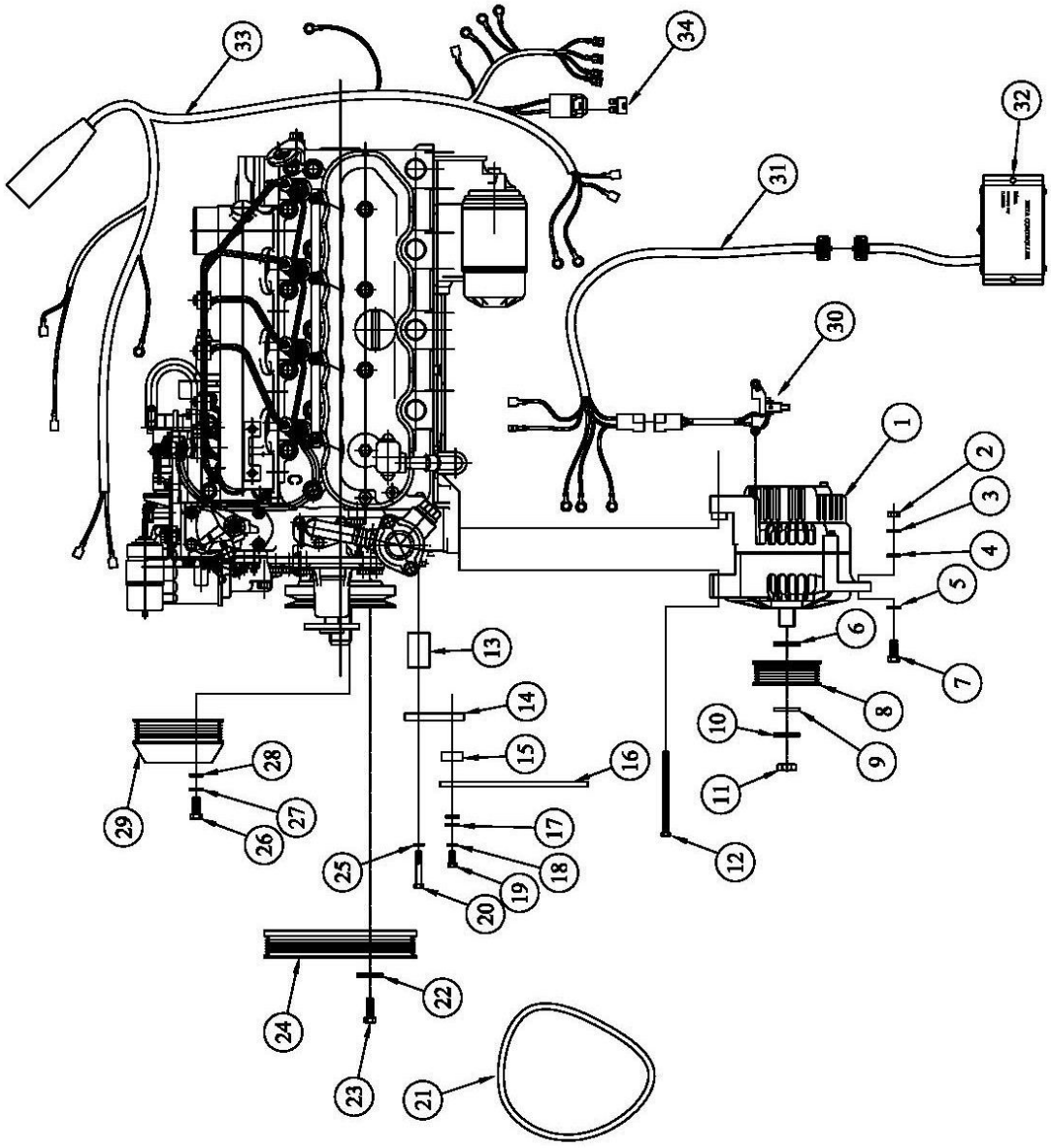

DRAWING 100-05466

Beta43, Beta50 & Beta60 WITH 100 AMP ALTERNATOR / BETA CONTROLLER

(PAGE 1 of 1)

Ref No	Part Number	Part Name	Quantity
01	200-03008	ALTERNATOR, 100A INTERNAL FAN	1
02	217-99295	M8 NUT	1
03	217-99292	M8 SPRING WASHER	1
04	217-99293	M8 FLAT WASHER	1
05	217-99293	M8 FLAT WASHER	1
06	N/A	SPACER (PART OF 200-03008)	
07	217-99302	M8 x 40mm SET	1
08	201-02251	6K ALTERNATOR DRIVEN PULLEY 80mm DIAMETER	1
09	N/A	FLAT WASHER (PART OF 200-03008)	
10	N/A	SPRING WASHER (PART OF 200-03008)	
11	N/A	NUT (PART OF 200-03008)	
12	217-02204	M10 x 130mm SOCKET CAP SCREW	1
13	201-61440/46	SPACER 25DIA x 63mm 201-61440 -MACHINED TO 46mm OAL	1
14	202-05459	100AMP ALTERNATOR ARM SPACER BRACKET	1
15	201-61420/10	SPACER 25DIA x 20.5mm 201-61420 -MACHINED TO 10mm OAL	1
16	202-01086	100AMP ALTERNATOR ADJUSTING ARM	1
17	217-99294	M8 PENNY WASHER	2
18	217-99292	M8 SPRING WASHER	1
19	217-99301	M8 x 35mm SET	1
20	217-99306	M8 x 80mm SET	2
21	214-00497	Belt Polyvee 100 Amp 6PK1173 Beta43 to Oct2008, Beta50 to July2007	1
	214-92105	Belt, 6K Polyvee 100A -All from 2008 & Beta43 from Oct2008 –Oct09	
	214-07037	Belt, 6K Polyvee 100Amp -All from October 2009	
22	217-99293	M8 FLAT WASHER	3
23	217-02738	M8 x 70mm SOCKET CAP SCREW	3
24	201-05440	S3 CRANK OVERPULLEY 6 GROOVE FOR 100AMP ALT.	1
25	217-99293	M8 FLAT WASHER	2
26	217-99298	M8 x 20mm SET	4
27	217-99292	M8 SPRING WASHER	4
28	217-99293	M8 FLAT WASHER	4
29	201-05439	S3 WATER PUMP PULLEY 6 GROOVE FOR 100AMP ALT.	1
30	200-01771	REGULATOR TO SUIT 200-03008 ALTERNATOR	1
	200-02684	BRUSH BOX 100A –TO SUIT CONTROLLER ONLY	
31	200-02737	WIRING LOOM BETA CONTROLLER	1
32	200-02580	BETA CONTROLLER	1
33	200-05267	SUPER 3 SERIES ENGINE HARNESS	1
34	200-00959	ENGINE HARNESS FUSE	1

Wiring harness & switches

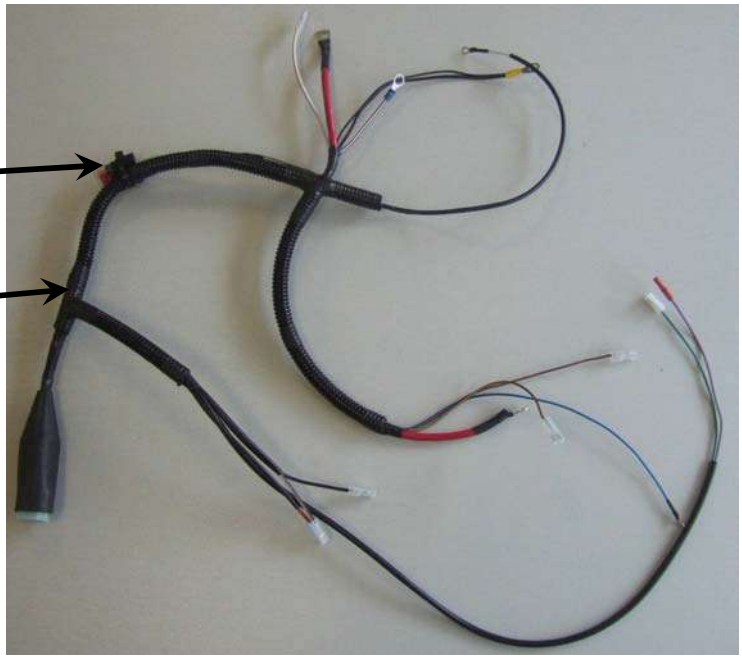

Ref. No.	Part No.	Part Name	Qty	Remarks	
010	200-00959	Engine harness fuse (blade type)	1		
020	200-05267	Super3 Series engine harness	1	Includes fuse	
030	600-62670	Oil pressure switch (not 2C panel)	1		
040	600-62820	Water temperature switch (not 2C panel)	1	Std from Nov 2008	
050	200-01133	Water temperature switch / sender 95^{0}C (Not 2C panel) 1/8BSP	1	Std before Nov 2008	
060	212-01480	3/8BSPT Male x1/8BSP Female galvanised adaptor for 200-01133	1	Required if temp sender being fitted into 3/8BSP thread	
070	200-04588/01	1 metre extension harness	1	Not shown	
080	200-04588/02	2 metre extension harness	1	Not shown	
090	200-04588/03	3 metre extension harness	1	Not shown	
100	200-04588/04	4 metre extension harness	1	Not shown	
110	200-04588/05	5 metre extension harness	1	Not shown	
120	200-04588/06	6 metre extension harness	1	Not shown	
130	200-04588/08	8 metre extension harness	1	Not shown	
140	200-04588/10	10 metre extension harness	1	Not shown	
150	200-04588/15	15 metre extension harness	1	Not shown	
160	200-57640	Relay (for extension harnesses)	1	Not shown	

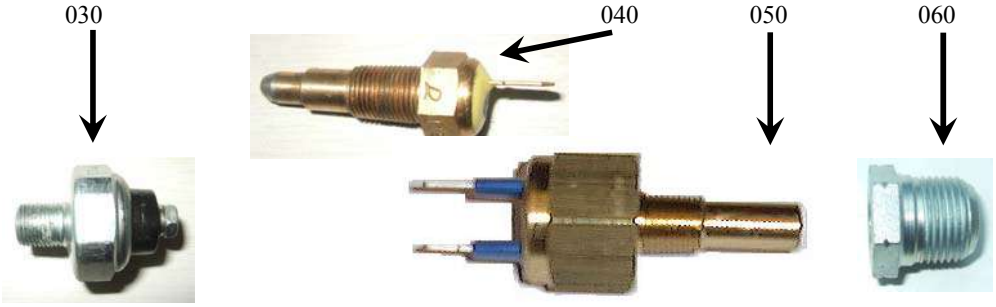

Simple 2A panel –LED type to May 2005

Ref. No.	Part No.	Part Name	Qty	Remarks	
010	N/A	Simple panel (complete with LED pack)	1	No longer available, Use AK/2AS/KS01	N/A
020	600-00057	Kubota keyswitch	N/A		
030	600-00058	Kubota keys -PAIR	1	Not shown	
040	200-00072	Panel stop button	1		
050	200-01295	LED Pack assembly & buzzer (SEASPEC)	1	Not shown	
	200-01296	LED Pack assembly & buzzer (DOMESTIC)		Not shown	
060	200-01288	Panel blank 2A –LED SEASPEC	1	Check availability Does not include 050	Suits 3 red, 1 green LED
	200-01291	Panel blank 2A –LED DOMESTIC		Check availability Does not include 050	Suits 4 red, 1 green LED
070	200-00639	11 Way plug to suit male type spade	1	Not shown	
080	200-00048	Large shroud for 11 way plug	1	Not shown	
090	200-00047	Male spade for 11 way plug	11	Not shown	
100					

Simple 2A panel –LAMP type from May 2005

Ref. No.	Part No.	Part Name	Qty	Remarks	
010	AK/2AS/KS01	Simple panel with 3m loom (complete)	1		
020	600-00057	Kubota keyswitch –suits small key	N/A	To August 2008	
	600-00057/01	Kubota keyswitch –suits large key	1	From August 2008	
030	600-00058	Kubota keys –PAIR (SMALL)	1	To August 2008	
	600-00058/01	Kubota keys –PAIR (LARGE)	1	From August 2008	
040	200-00072	Panel stop button	1		
050	200-04657	Red 12V warning lamp & retaining clip	3		
060	200-04656	Green 12V power on lamp & retaining clip	1		
070	N/A	Panel blank 2A –LAMP TYPE	1	Check availability	
080	200-00639	11 Way plug to suit male type spade	1	Not shown	
090	200-00048	Large shroud for 11 way plug	1	Not shown	
100	200-00047	Male spade for 11 way plug	11	Not shown	
110	200-04655	Alarm board with buzzer	1	Not shown	
120					

2AB panel –LED type to May 2005

Ref. No.	Part No.	Part Name	Qty	Remarks	
010	200-00853	2AB panel (excludes tacho –see 030)	1	No longer available, Use AK/2ABD/KS31	N/A
020	200-00072	Panel stop button	1		
030	200-00054	0-4000 RPM tacho & hourmeter (DATCON)	1	To March 2002	
	200-02373	0-4000 RPM tacho & hourmeter (VDO)		From March 2002, ***Viewline Jan2010***	
040	600-00057	Kubota keyswitch	N/A		
050	600-00058	Kubota keys -PAIR	1	Not shown	
060	200-01295	LED Pack assembly & buzzer (SEASPEC)	1	Not shown	
	200-01296	LED Pack assembly & buzzer (DOMESTIC)		Not shown	
070	200-01289	Panel blank 2AB (SEASPEC)	1	Check availability Does not include 050	
	200-01292	Panel blank 2AB (DOMESTIC)		Check availability Does not include 050	
080	200-00639	11 Way plug to suit male type spade	1	Not shown	
090	200-00048	Large shroud for 11 way plug	1	Not shown	
100	200-00047	Male spade for 11 way plug	11	Not shown	
110					

2AB panel –LAMP type from May 2005

Ref. No.	Part No.	Part Name	Qty	Remarks	
010	AK/2ABD/KS31	2AB panel with 3m loom (Complete)	1		
020	200-00072	Panel stop button	1		
030	200-02373	0-4000 RPM tacho & hourmeter (VDO)	1	From March 2002	
	200-02373/03	0-3000 RPM tacho & hourmeter (VDO)		From March 2007, ***Viewline Jan2010***	
040	600-00057	Kubota keyswitch –suits small key	N/A	To August 2008	
	600-00057/01	Kubota keyswitch –suits large key	1	From August 2008	
050	600-00058	Kubota keys –PAIR (SMALL)	1	To August 2008	
	600-00058/01	Kubota keys –PAIR (LARGE)		From August 2008	
060	200-04657	Red 12V warning lamp & retaining clip	4		
070	200-04656	Green 12V power on lamp & retaining clip	1		
080	N/A	Panel blank 2AB (DOMESTIC)	1	Check availability	
090	200-00639	11 Way plug to suit male type spade	1	Not shown	
100	200-00048	Large shroud for 11 way plug	1	Not shown	
110	200-00047	Male spade for 11 way plug	11	Not shown	
120	200-04655	Alarm board with buzzer	1	Not shown	
130	200-87020	12V 28Ra 40Amp relay	1	Not shown	
140					

2AB'V' panel –LAMP type to May 2005

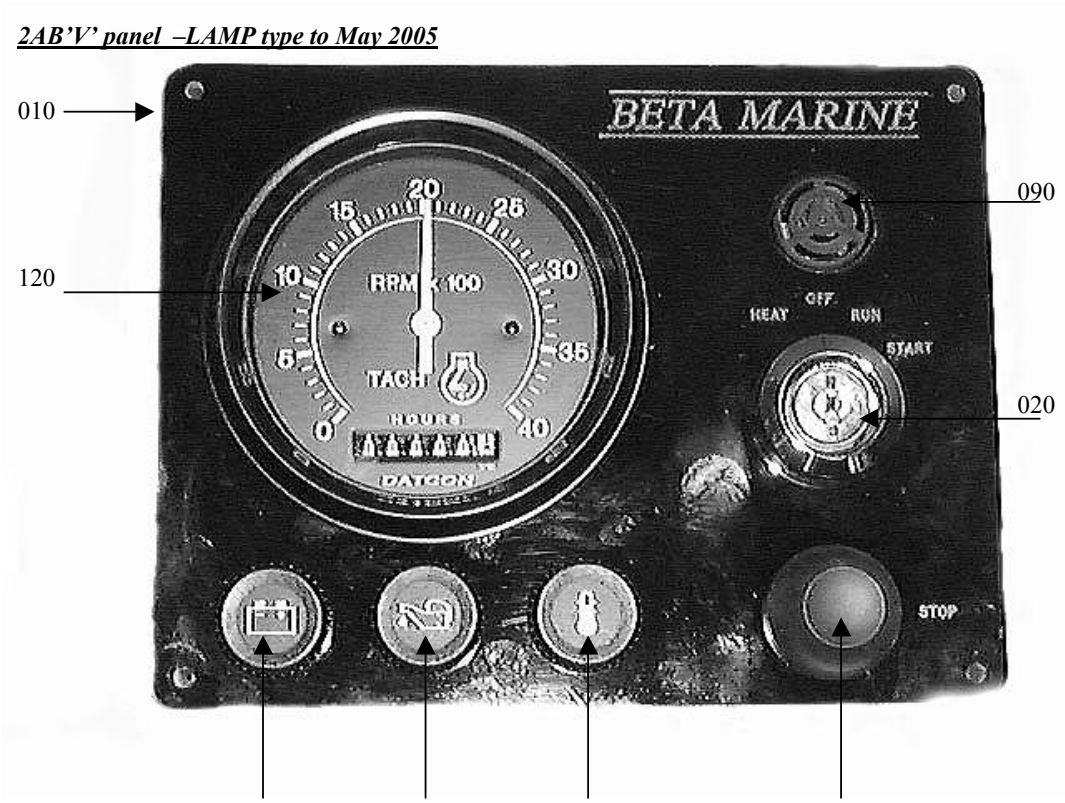

Ref. No.	Part No.	Part Name	Qty	Remarks	
010	200-89421	2AB'V' panel (excludes tacho –see 120)	1	No longer available, Use AK/2ABV/KS31	N/A
020	600-00057	Kubota keyswitch	N/A		
030	600-00058	Kubota keys -PAIR	1	Not shown	
040	200-00059	Warning lamp battery	1		
050	200-00060	Warning lamp oil	1		
060	200-00061	Warning lamp water	1		
070	200-00072	Panel stop button	1		
080	200-97490	12V bulb	3	Not shown	
090	200-06434	12V DC buzzer to suit 2AB'V' panel	1	Not shown	
100	200-98980	Panel diode pack	1	Not shown	
110	200-00042	Panel blank 2AB'V'	1	Check availability Includes 090 only	
120	200-00054	0-4000 RPM tacho & hourmeter (DATCON)	1	To March 2002	
	200-02373	0-4000 RPM tacho & hourmeter (VDO)		From March 2002, ***Viewline Jan2010***	
130	200-00639	11 Way plug to suit male type spade	1	Not shown	
140	200-00048	Large shroud for 11 way plug	1	Not shown	
150	200-00047	Male spade for 11 way plug	11	Not shown	
160					

2AB'V' panel –LAMP type from May 2005

Ref. No.	Part No.	Part Name	Qty	Remarks	
010	AK/2ABV/KS31	2AB'V' panel with 3m loom (complete)	1		
020	600-00057	Kubota keyswitch –suits small key	N/A	To July 2008	
	600-00057/01	Kubota keyswitch –suits large key	1	From July 2008	
030	600-00058	Kubota keys –PAIR (SMALL)	1	To July 2008	
	600-00058/01	Kubota keys –PAIR (LARGE)	1	From July 2008	
040	200-04657	Red 12V warning lamp & retaining clip	3		
050	200-04656	Green 12V power on lamp & retaining clip	1		
060	200-00072	Panel stop button	1		
070	200-02373	0-4000 RPM tacho & hourmeter (VDO)	1	From March 2002	
	200-02373/03	0-3000 RPM tacho & hourmeter (VDO)		From March 2007, ***Viewline Jan2010***	
080	N/A	Panel blank 2ABV	1	Check availability	
090	200-00639	11 Way plug to suit male type spade	1	Not shown	
100	200-00048	Large shroud for 11 way plug	1	Not shown	
110	200-00047	Male spade for 11 way plug	11	Not shown	
120	200-04655	Alarm board with buzzer	1	Not shown	
130					

2AB'V'W pushbutton control panel –LAMP type from May 2005

Ref. No.	Part No.	Part Name	Qty	Remarks	
010	AK/2ABVW/KS31	2AB'V'W panel with 3m loom (complete)	1		
020	200-00072	Panel stop / start / heat button	3		
030	200-04657	Red 12V warning lamp & retaining clip	3		
040	200-04656	Green 12V power on lamp & retaining clip	1		
050	200-02373	0-4000 RPM tacho & hourmeter (VDO)	1	From March 2002	
	200-02373	0-3000 RPM tacho & hourmeter (VDO)		From March 2007, ***Viewline Jan2010***	
060	N/A	Panel blank 2ABVW	1	Check availability	
070	200-00639	11 Way plug to suit male type spade	1	Not shown	
080	200-00048	Large shroud for 11 way plug	1	Not shown	
090	200-00047	Male spade for 11 way plug	11	Not shown	
100	200-04655	Alarm board with buzzer	1	Not shown	
110	200-87020	12V 28Ra 40Amp relay	2	Not shown	
120	200-03466	Pektron diode	1	Not shown	
130	200-02618	Diode bridge	1	Not shown	

SFIA 2B panel –LAMP type to May 2005

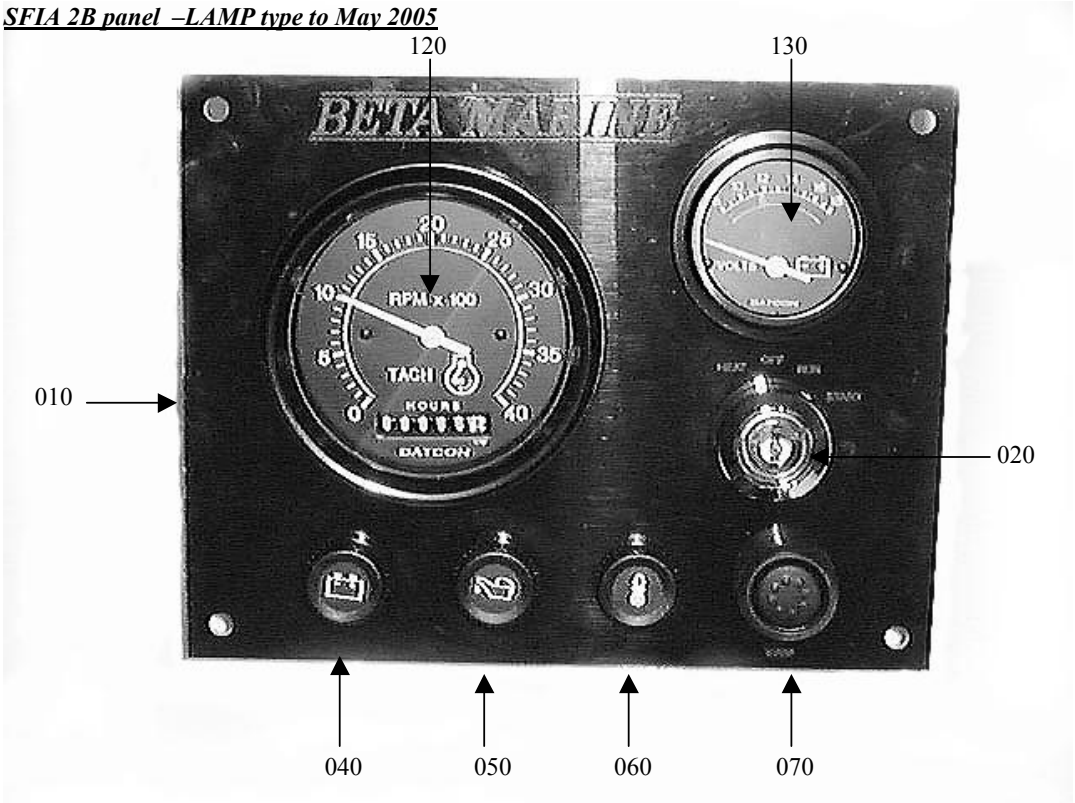

Ref. No.	Part No.	Part Name	Qty	Remarks	
010	200-05408	SFIA 2B Panel –with temperature gauge From February 2003 (excludes tacho -see 120)	1	No longer available, Use AK/2BT/KS31	N/A
	200-60952	SFIA 2B Panel –with voltmeter To February 2003 (excludes tacho –see 120)			N/A
020	600-00057	Kubota keyswitch	N/A		
030	600-00058	Kubota keys -PAIR	1	Not shown	
040	200-00059	Warning lamp battery	1		
050	200-00060	Warning lamp oil	1		
060	200-00061	Warning lamp water	1		
070	200-00072	Panel stop button	1		
080	200-97490	12V bulb	3	Not shown	
090	200-99433	12V DC Buzzer	1	Not shown	
100	200-98980	Panel diode pack	1	Not shown	
110	200-00043	Panel blank SFIA 2B	1	Check availability	
120	200-00054	0-4000 RPM tacho & hourmeter (DATCON)	1	To March 2002	
	200-02373	0-4000 RPM tacho & hourmeter (VDO)		From March 2002, ***Viewline Jan2010***	
130	200-91400	Water temperature gauge (from February 2003)	1	From February 2003	
	200-91390	Voltmeter gauge (-February 2003)		To February 2003	
140	200-00639	11 Way plug to suit male type spade	1	Not shown	
150	200-00048	Large shroud for 11 way plug	1	Not shown	
160	200-00047	Male spade for 11 way plug	11	Not shown	

SFIA 2B panel –LAMP type from May 2005

Ref. No.	Part No.	Part Name	Qty	Remarks	
010	AK/2BT/KS31	SFIA 2B Panel –with temperature gauge From May 2005 (complete)	1	With Murphy temp gauge	
020	600-00057	Kubota keyswitch –suits small key	N/A	To July 2008	
	600-00057/01	Kubota keyswitch –suits large key	1	From July 2008	
030	600-00058	Kubota keys –PAIR (SMALL)	1	To July 2008	
	600-00058/01	Kubota keys –PAIR (LARGE)		From July 2008	
040	200-04657	Red 12V warning lamp & retaining clip	3		
050	200-04656	Green 12V power on lamp & retaining clip	1		
060	200-00072	Panel stop button	1		
070	200-02373	0-4000 RPM tacho & hourmeter (VDO)	1	To March 2002	
	200-02373/03	0-3000 RPM tacho & hourmeter (VDO)		From March 2007, ***Viewline Jan2010***	
080	200-96200	Murphy water temperature gauge	1	(Murphy not shown)	
090	N/A	Panel blank 2B	1	Check availability	
100	200-04655	Alarm board with buzzer	1	Not shown	
110	200-00639	11 Way plug to suit male type spade	1	Not shown	
120	200-00048	Large shroud for 11 way plug	1	Not shown	
130	200-00047	Male spade for 11 way plug	11	Not shown	
140					

Murphy deluxe 2C panel & senders –Seaspec 4 Lamp-to May 2005

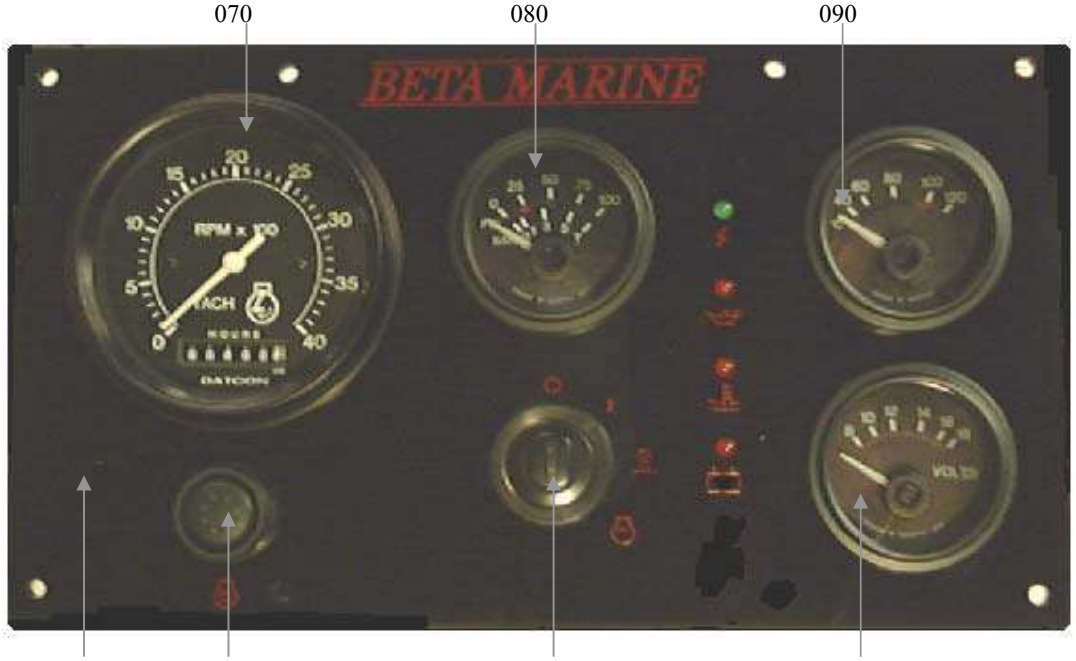

Ref. No.	Part No.	Part Name	Qty	Remarks	
010	200-00854	Murphy 2C deluxe panel –Seaspec 4 Lamp (Excludes gauges & loom –See 070, 080, 090, 100 & 150)	1	No longer available, Use AK/2CD/KS31	N/A
020	200-00072	Panel stop button	1		
030	200-00073	Murphy panel keyswitch	1		
040	200-98965	Murphy deluxe panel single key	2	Not shown	
050	200-01295	LED Pack assembly & buzzer –Seaspec 4 Lamp	1	Not shown	
060	200-01290	Murphy deluxe panel blank (Seaspec 4 Lamp)	1	Excludes LED pack	
070	200-00054	0-4000 RPM tacho & hourmeter	1	To March 2002	
	200-02373	0-4000 RPM tacho & hourmeter (VDO)		From March 2002, ***Viewline Jan2010***	
080	200-96190	Murphy oil pressure gauge	1		
090	200-96200	Murphy water temperature gauge	1		
100	200-96210	Murphy voltmeter gauge	1		
110	212-04355	1/8"BSP MxF elbow	1		
120	200-94350	Murphy pressure sender	1		
130	200-91980	Water temperature sender adaptor	1		
140	200-94360	Murphy temperature sender	1		
150	200-93830	Murphy deluxe 3m connecting loom	1	Not shown	
160	200-00046	11 Way socket to suit female type spade	1	Not shown	
170	200-00181	Female spade for 11 way plug	11	Not shown	

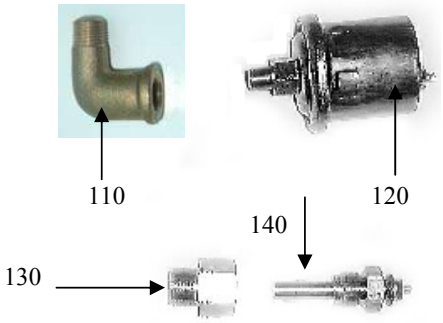

Murphy deluxe 2C panel & senders –Domestic 5 Lamp –to May 2005

Ref. No.	Part No.	Part Name	Qty	Remarks	
010	200-00851	Murphy 2C deluxe panel –Domestic 5 Lamp (Excludes gauges & loom –See 070, 080, 090, 100 & 150)	1	No longer available, Use AK/2CD/KS31	N/A
020	200-00072	Panel stop button	1		
030	200-00073	Murphy panel keyswitch	1		
040	200-98965	Murphy deluxe panel single key	2	Not shown	
050	200-01296	LED Pack assembly & buzzer –Domestic 5 Lamp	1	Not shown	
060	200-01293	Murphy deluxe panel blank (Domestic 5 Lamp)	1	Excludes LED pack	
070	200-00054	0-4000 RPM tacho & hourmeter	1	To March 2002	
	200-02373	0-4000 RPM tacho & hourmeter (VDO)		From March 2002, ***Viewline Jan2010***	
080	200-96190	Murphy oil pressure gauge	1		
090	200-96200	Murphy water temperature gauge	1		
100	200-96210	Murphy voltmeter gauge	1		
110	212-04355	1/8"BSP MxF elbow	1		
120	200-94350	Murphy pressure sender	1		
130	200-91980	Water temperature sender adaptor	1		
140	200-94360	Murphy temperature sender	1		
150	200-93830	Murphy deluxe 3m connecting loom	1	Not shown	
160	200-00046	11 Way socket to suit female type spade	1	Not shown	
170	200-00181	Female spade for 11 way plug	11	Not shown	

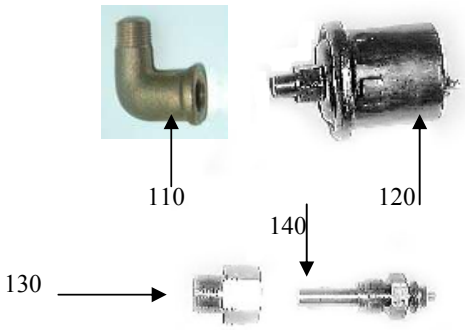

Murphy deluxe 2C panel & senders –Domestic 5 Lamp –from May 2005

Ref. No.	Part No.	Part Name	Qty	Remarks	
010	AK/2CD/KS31	Murphy 2C deluxe panel –Domestic 5 Lamp (Complete, less 3m interconnection cable 1670)	1		
020	200-00072	Panel stop button	1		
030	600-00057	Kubota keyswitch –suits small key	N/A	To July 2008	
	600-00057/01	Kubota keyswitch –suits large key	1	From July 2008	
040	600-00058	Kubota keys –PAIR (SMALL)	1	To July 2008	
	600-00058/01	Kubota keys –PAIR (LARGE)		From July 2008	
050	200-04657	Red 12V warning lamp & retaining clip	4		
060	200-04656	Green 12V power on lamp & retaining clip	1		
070	N/A	Murphy deluxe panel blank (Domestic 5 Lamp)	1	Check availability	
080	200-02373	0-4000 RPM tacho & hourmeter (VDO)	1	From March 2002	
	200-02373/03	0-3000 RPM tacho & hourmeter (VDO)		From March 2007, ***Viewline Jan2010***	
090	200-96190	Murphy oil pressure gauge	1		
100	200-96200	Murphy water temperature gauge	1		
110	200-96210	Murphy voltmeter gauge	1		
120	212-04355	1/8"BSP MxF elbow	1		
130	200-94350	Murphy pressure sender	1		
140	200-91980	Water temperature sender adaptor	1		
150	200-94360	Murphy temperature sender 5/8UNF	1		
	200-08248	Murphy temperature sender 1/8NPT -Beta60 March11		Not shown	
160	200-04588/03	3m extension harness	1	Not shown	
170	200-00639	11 Way plug to suit male type spade	1	Not shown	
180	200-00047	Male spade for 11 way plug	11	Not shown	

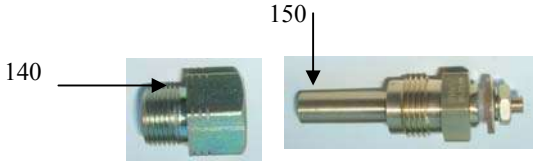

Panel gauges & senders

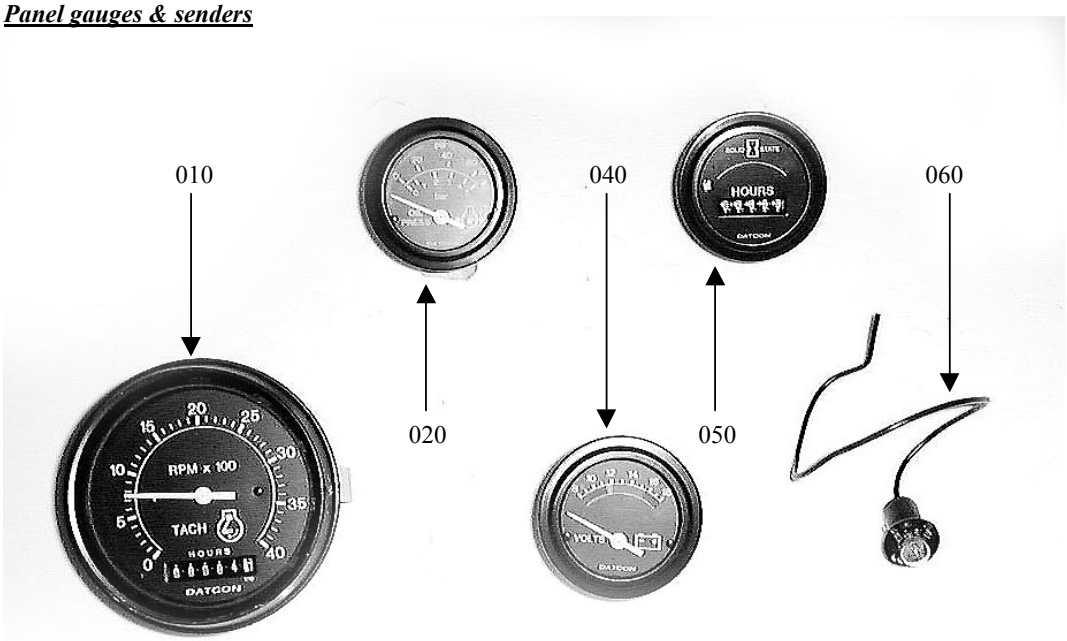

Ref. No.	Part No.	Part Name	Qty	Remarks	
010	200-00054	0-4000 RPM tacho & hourmeter	1	To March 2002	
	200-02373	0-4000 RPM tacho & hourmeter (VDO)		From March 2002	
	200-02373/03	0-3000 RPM tacho & hourmeter (VDO)		From March 2007, ***Viewline Jan2010***	
020	200-08011	Oil pressure gauge –VDO Viewline	1	Not shown	
	200-91380	Oil pressure gauge –Datcon			
030	200-07981	Water temperature gauge –VDO Viewline	1	Not shown	
	200-91390	Water temperature gauge –Datcon		Not shown	
040	200-07980	Voltmeter gauge –VDO Viewline	1	Not shown	
	200-91400	Voltmeter gauge –Datcon			
050	200-90000	Hourmeter gauge	1		
060	200-01392	Datcon gauge bulb 12V	1		
070	212-04355	1/8"BSP MxF elbow	1		
080	200-62680	0-5 Bar switch / sender	1		
090	200-01133	Water temperature switch / sender 95C	1		
100	212-01480	3/8BSPTM x1/8BSPF adaptor	1		
110	200-04805	Bulb, red for 12V VDO tacho	1	Not shown	
120	200-96220	Datcon tacho bulb 12V	1	Not shown	
130	200-07664	8 Pin connector –for Viewline gauges	1	Not shown – comes with gauge	

070

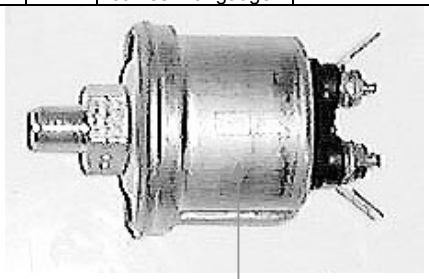

080

090

100

Various electrical & panel parts and components

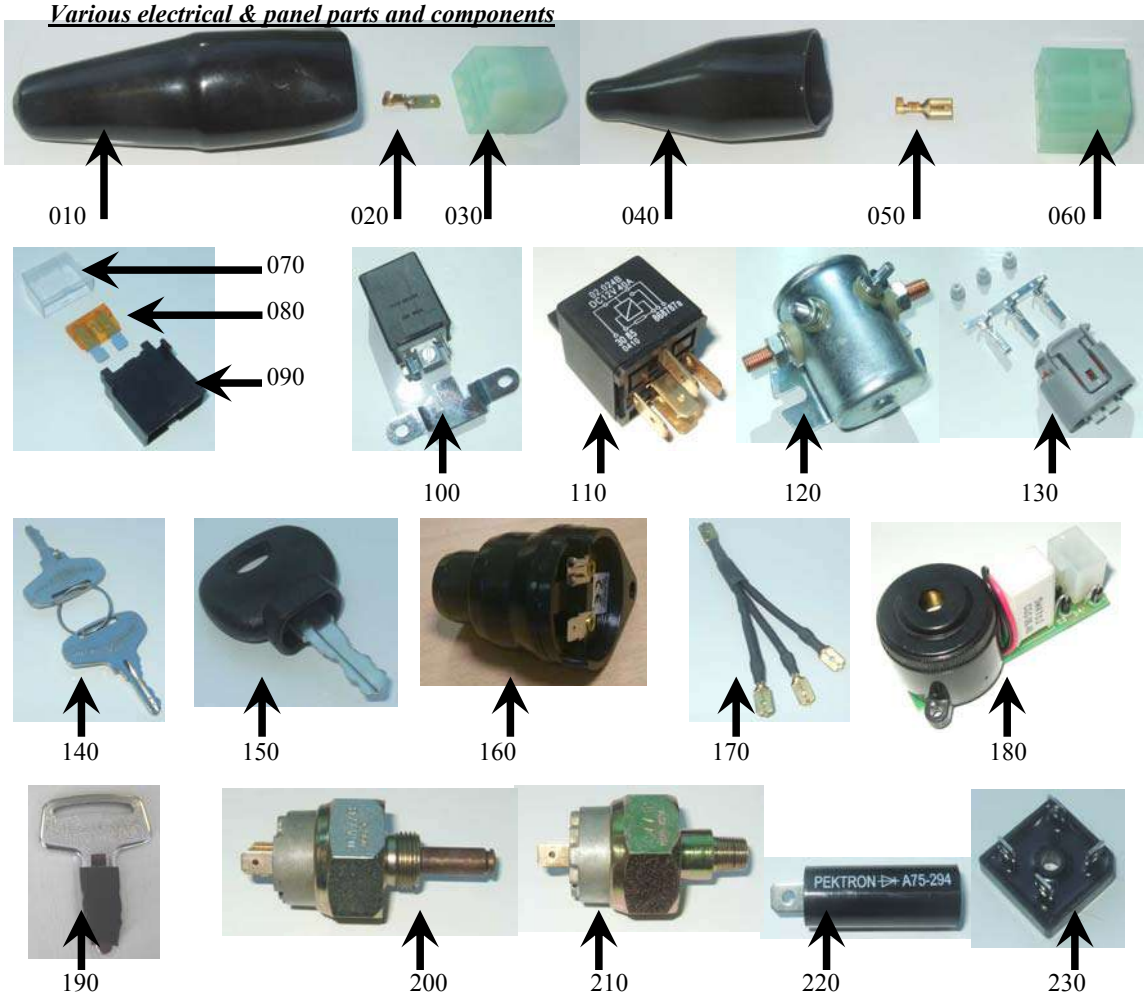

Ref. No.	Part No.	Part Name	Qty	Remarks	
010	200-00048	Large shroud for 11 way plug	1	On panel connection	
020	200-00047	Male spade for 11 way plug	11	On panel connection	
030	200-00639	11 Way plug to suit male type spade	1	On panel connection	
040	200-00638	Small shroud for 11 way socket	1	On engine harness	
050	200-00181	Female spade for 11 way socket	11	On engine harness	
060	200-00046	11 Way socket to suit female type spade	1	On engine harness	
070	200-01426	Plastic clear fuse cover	1	On engine harness	
080	200-00959	Fuse, blade type 40 Amp	1	On engine harness	
090	200-00640	Fuse holder, blade type for 40 Amp	1	On engine harness	
100	200-57640	12V 33Ra 70Amp relay	1	For extended looms	
110	200-87020	12V 28Ra 40Amp relay	1	On rear of panel	
120	200-89950/01	12V heavy duty relay	1	For insulated earth	
130	600-02405	Kubota alternator 3 pin coupler	1	For 3 pin Denso alt	
140	600-00058	Kubota keys –**PAIR, SMALL**	1	Standard to mid 2008	
150	200-98965	Murphy deluxe panel single key	2	Deluxe to May 2005	
160	200-99433	12V buzzer	1	2B to May 2005	
170	200-98980	Panel diode pack	1	2ABV to May 2005	
180	200-04655	Alarm board with buzzer	1	Std from May 2005	
190	600-00058/01	Kubota keys –**PAIR, LARGE**	1	From mid 2008	
200	200-02069	Water temperature switch 096C 3/8BSP	1	Genset standard	
210	200-61190	Oil pressure switch 98kPa 1/8BSP	1	Genset standard	
220	200-03466	Pektron diode	1	Push button panels	
230	200-02618	Diode bridge	1	Push button panels	
240	200-04623	14 Core panel cable	/m	Not shown	

Expansion water bottle & spare parts list –all engines

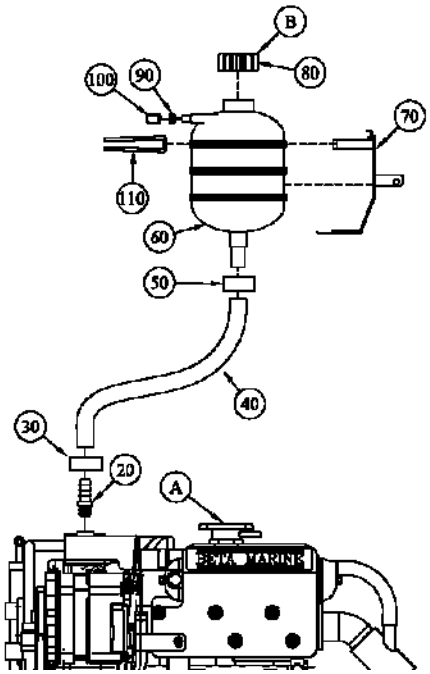

10	EXPANSION TANK KIT COMPLETE	AK/SML/EXP/001

REF	PART NAME	PART NO
20	3/8 BSPT - 3/4 HOSE TAIL	210-03297
30	30mm S/S HOSE CLIP	212-98464
40	3/4 BORE HEATER HOSE	212-00471
50	30mm S/S HOSE CLIP	212-98464
60	EXPANSION TANK	209-03065
70	MOUNTING BRACKET	209-03067
80	EXPANSION TANK CAP	209-03066
90	LARGE FUEL CLIP (NO:17)	212-03393
100	HOSE CAP (10mm ID)	212-03303
110	EXPANSION TANK HOLDING BAND	209-03068

WHEN FILLING, FILL POINT A AND REPLACE WATER CAP THEN FILL POINT B.

POINT A MUST BE STANDARD FILLER CAP P/N 208-80130 (PRESSURE 13 PSI)

Ref. No.	Part No.	Part Name	Qty	Remarks	
010	AK/SML/EXP/001	Expansion tank kit, complete	1		
(This kit consists of all items listed individually below)					
020	210-03297	3/8BSPT-3/4" Hose connector	1		
030	212-98464	Stainless steel hose clip 22-30mm	1		
040	212-00471	3/4" Bore water hose	1.5m		
050	212-98464	Stainless steel hose clip 22-30mm	1		
060	209-03065	Expansion tank	1		
070	209-03067	Expansion tank mounting bracket	1		
080	209-03066	Expansion tank lid	1		
090	212-07009	No 22 Stainless steel hose clip	1		
100	212-07011	Hose cap blanking bung	1		
110	209-03068	Expansion tank holding band	1		

Beta Marine Limited
Davy Way, Waterwells,
Quedgeley, Gloucester,
GL2 2AD, U.K.
Tel: +44 (0) 1452 723492
Fax: +44 (0) 1452 883742
www.betamarine.co.uk
sales@betamarine.co.uk

Standard fitting of calorifier connections to Super 3

-Heat exchanger cooled engine from March 2011

Hot water to calorifier tank

1. Remove 1/8" BSP bung from cylinder head, behind last injector at rear starboard side of engine.

2. Fit 1/8"BSP Male swivel adaptor with the supplied copper washer. Into this, fit the elbow and 5/8" hose connector.

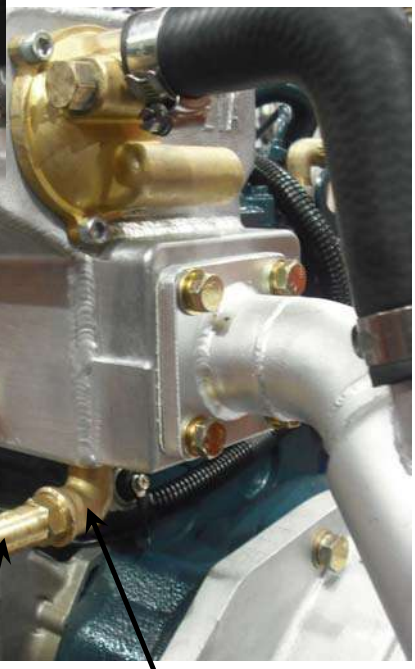

Cool water from calorifier tank

3. Remove bung from underside of heat exchanger tank with 8mm hex key.

4. Fit 3/8"BSP Male x Female elbow

5. Fit 3/8"BSP x 5/8 hose connector

Note: All fittings to be sealed with PTFE tape or pipe sealant to prevent water leaks when engine is at operating temperature and pressure.

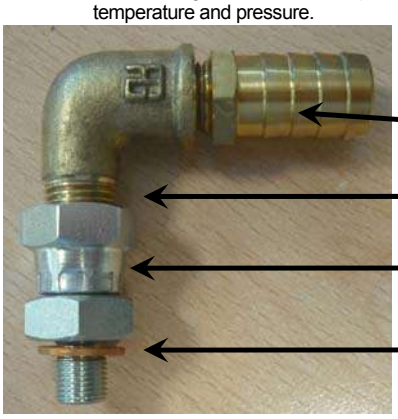

Part Numbers: 212-99233 212-99237

212-00904

212-04356

212-04356

212-06565

COMPLETE KIT: AK/HE/CAL/003

Prices and specifications are subject to amendment without notice. Information given is subject to our current conditions of tender and sale. In all cases please quote ***Beta Marine WOC 'K' number*** and Engine Type. Beta Marine will not be held responsible for incorrect supply without this information.

Beta Marine Limited
Davy Way, Waterwells,
Quedgeley, Gloucester,
GL2 2AD, U.K.
Tel: +44 (0) 1452 723492
Fax: +44 (0) 1452 883742
www.betamarine.co.uk
sales@betamarine.co.uk

Cleaning the heat exchanger tube stack &replacing wasting zinc anode on 2011 Mini, Super5 & Super3 Series engines

1. The wasting zinc anode should be replaced every year. This can be more frequent depending on the environment the vessel is in. The anode is attached to the bolt inserted in the rear end cap of the heat exchanger. See fig. 1.
2. Using a 9/16" spanner, unscrew the bolt and replace the complete unit with a new one.
3. Check for leaks.
4. It is possible for fine sea weed and other debris to get past the inlet filter and into the tube stack. This requires removal of the tube stack for cleaning.
5. Drain off coolant into a bucket.
6. Unscrew the 6 end cap retaining bolts using a 5mm Hex Key (three each end of the tube stack). Remove the 'O' rings and slide out the tube stack. Clean tube stack and end caps.
7. Re-assemble using new 'O' rings, Beta Marine part number 212-07273. Do not over tighten end cap bolts and make sure the tube stack is the right way round -see aligning marks Fig 2. This is to ensure sea water flows correctly through the tu straight out of the exhaust, allowing sea water to flow from the lower twenty tubes to the front endcap where it then returns through the upper twenty tubes, past the wasting anode and into the exhaust system.
8. Re-fill engine with water/anti-freeze solution and run engine up to temperature to check for leaks.

Fig 1 Wasting anode

Fig 2 Aligning marks

Part numbers:
2 OFF 212-07273 O RING HEAT EXCHANGER TUBESTACK
1 OFF 209-61840 ZINC WASTING ANODE
6 OFF 217-00190Z M6 x 16mm SOCKET CAP SCREW

Prices and specifications are subject to amendment without notice. Information given is subject to our current conditions of tender and sale. In all cases please quote ***Beta Marine WOC 'K' number*** and Engine Type. Beta Marine will not be held responsible for incorrect supply without this information.

Installation Kits

010

020

030

040

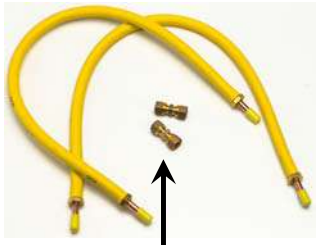

050

060

070

080

090

100

110

120

Ref. No.	Part No.	Part Name	Qty	Remarks
010	AK/SML/HE/6e/S301	WATER INLET KIT SUPER3 -BALL VALVE FROM JAN11 1" ID	1	
020	AK/SML/HE/6b/001	2" WATER COOLED EXHAUST KIT	1	
030	AK/SML/HE/6c/001	2" PLASTIC WATERLOCK (& 4 OFF HOSE CLIPS)	1	
040	212-00466	ANTI-SYPHON WITH VENT	1	
050	AK/SML/6g/001	FLEXIBLE FUEL PIPES 24" OAL ISO7840	1	
060	AK/SML/6k/001	FUEL DELIVERY KIT	1	
	AK/SML/6k/001	FUEL LEAK OFF KIT	1	
070	AK/SML/6l/H01	FUEL / WATER SEPARATOR HEAT EXCHANGER COOLED (8mm HOSE TAILS)	1	NOT SHOWN
	AK/SML/6l/001	FUEL / WATER SEPARATOR KEEL COOLED (8mm COMPRESSION)		
080	AK/6H/HE/001	ELECTRIC FUEL LIFT PUMP (HEAT EXCHANGER COOLED 8mm HOSE TAILS)	1	
	AK/6H/KC/001	ELECTRIC FUEL LIFT PUMP (KEEL COOLED 8mm COMPRESSION)		
090	AK/MID/3h/001	S3 REMOTE OIL FILTER BULKHEAD MOUNTED	1	NOT SHOWN
100	AK/SML/5a/002	SINGLE LEVER CONTROL	1	
110	212-96070/01	SINGLE LEVER CONTROL CABLE 3m	1	
120	200-96160	BATTERY LEADS 1m, 25mm 1 BLACK & 1 RED -UP TO Beta60 ONLY	1	

Short Voyage Spares Kits

Ref. No.	Part No.	Part Name	Qty	Remarks
010	AK/S3H4/18/MVE01	SPARES KIT Beta43 & 60 H/E 65AMP -FROM APRIL11	1	NOT SHOWN
	AK/S3H4/18/6KMVE01	SPARES KIT Beta43 & 60 H/E 100AMP 6K DRIVE -FROM MARCH11		NOT SHOWN

PLEASE NOTE: THERE ARE TOO MANY COMBINATIONS OF SPARES KIT TO LIST, PLEASE ADVISE BETA MARINE OF YOUR ENGINES WOC (K) NUMBER OR SERIAL NUMBER AND WE SHALL ADVISE.
PRICE OF THIS KIT WILL BE THE SAME AS ILLUSTRATED ABOVE.

SPARES & REPLACEMENT PARTS

These items are available from

Beta Marine Limited
Davy Way
Waterwells
Quedgeley
Gloucester
GL2 2AD, UK

Telephone: 01452 723492 Int. Tel: 44 1452 723492
Fax: 01452 729916
Internet: www.betamarine.co.uk
Spares email: spares@betamarine.co.uk