Teilekatalog
Parts catalogue
Catalogue de pièces
Reservdelskatalog
Catalogo dei pezzi di ricambio

# BMW Marine Motor

## D 35-1 D 50-1
## D 35-2 D 50-2

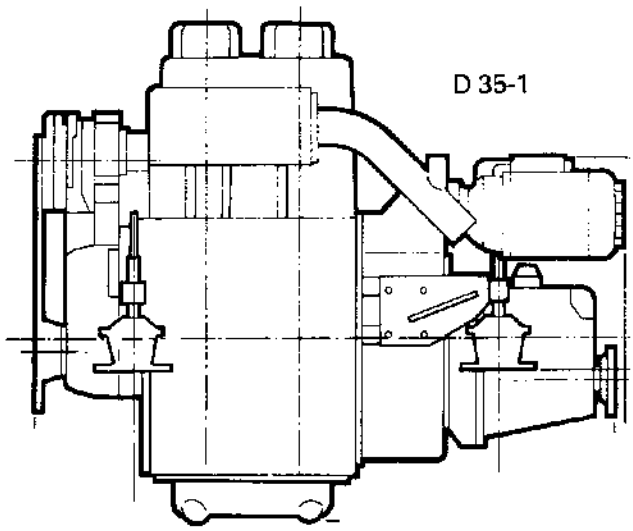


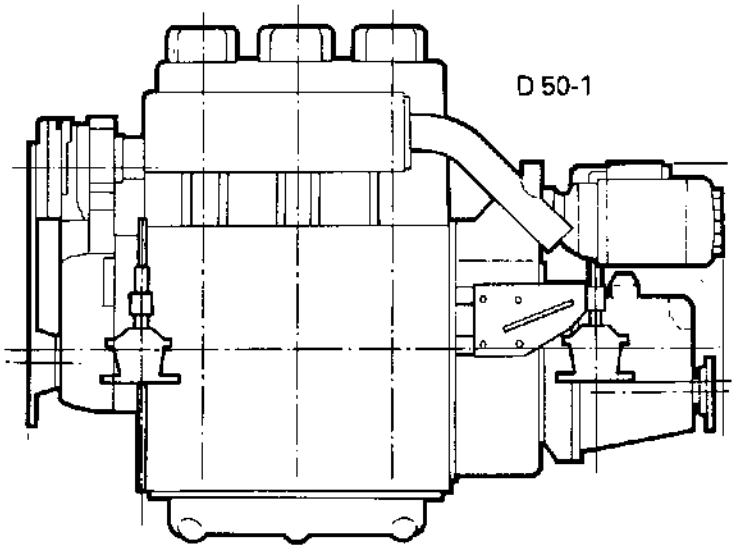


V12 Engineering
Box 50, Ontario, Canada P0X 1C0
www.bmwmarine.net

BMW Marine GmbH
München

Copyright BMW Marine GmbH, München

Best.-Nr. 01 09 2 128 039

Der vorliegende Teilekatalog gilt für den Bootsmotor D 35-1/2 und D 50-1/2.
Die bis Februar 1985 erfolgten Änderungen sind berücksichtigt. Nach diesem Zeitpunkt anfallende Änderungen werden Ihnen mit Nachträgen bekanntgegeben.

The present spare parts catalogue applies to the BMW D 35-1/2 and D 50-1/2 marine engine.
All amendments are included up to February 1985. Later amendments will be communicated with the aid of modification lists.

Le présent catalogue des pièces de rechange est valable pour le moteur de canot BMW D 35-1/2 et D 50-1/2.
Les modifications jusqu'au mois den février 1985 sont prise en considération. Après ce temps les modifications ayant lieu vous seront communiquées à l'aide des suppléments.

Den befintliga katalogen gå för båtmotoren BMW D 35-1/2 och D 50-1/2.
Ändringar till februari 1985 är inbegripad. Alla ändringar efter denna tidpunkten skal tillkännagivas med supplementer.

Il presente catalogo dei pezzi di ricambio vale per il motore marino D 35-1/2 e D 50-1/2.
Sono state tenute in considerazione le modifiche effettuate fino a Febbraio 1985.

Der Teilekatalog umfaßt alle Teile der genannten Baumuster. Sein Aufbau und sein System ermöglichen es, durch einfaches Auswechseln der Blätter Änderungen und Ergänzungen schnell und sauber zu übernehmen.

Beim Austausch der Blätter ist auf die Seite und das Ausgabedatum zu achten. Die alten Blätter, die durch neue ersetzt werden, sind aus dem Katalog zu entfernen.

Abbildungen und Texte unterliegen einem ständigen Änderungsdienst.

This catalogue lists all spare parts for the type mentioned. The loose-leaf system enables the user to carry out modifications and additions quickly and accurately py simply replacing the sheets concerned.

To file new pages correctly check the page number and date of issue. Remove the superseded pages from the catalogue.

Illustrations and text are subject to continuous modifications.

Le catalogue des pièces de rechange comprend toutes les pièces des modèles type mentionnés. Sa structure et son système rendent possible de faire des modifications et suppléments simplement par remplacement des feuilles.

En remplacant les feuilles il faut faire attention à la page et la date d'édition.

Ecartez les vieilles feuilles, remplacées par des nouvelles, du catalogue.

Les figures et textes sont soumises d'un service de modification continu.

Denna katalog innesluta alla fordondelar för uppförande modellen. Struktur och system mögliggöra överta ändringar och supplementer snabbt och ackurat genom utväxling av blad.

Om bladen är utväxlat gi akt på sidan och utmatade data. Gammla blad som ersättas med nya skal tas fram katalogen.

Avbildningar och texter skal modifieras kontinuerligt.

Il catalogo dei pezzi di ricambio comprende tutti i pezzi dei modelli di costruzione indicati. La sua disposizione ed il suo sistema consente, mediante semplice scambio dei fogli, di effettuare modifiche ed integrazioni in modo rapido e pulito.

Nel sostituire i fogli si dovrà tenere in considerazione la pagina e la data di emmissione.
I fogli vecchi che verranno sostituiti con nuovi, sono da eliminare dal catalogo.

Le illustrazioni ed i testi sono soggetti ad un costante servizio modifiche.

## KOPFLEISTEN SYMBOLE / TOP LINE SYMBOLS / SYMBOLES DES TITRES / ÖVERSKRIFT SYMBOLER / SOMBOLI DI CORNICE

| | |
|---|---|
| Nr. | Bildnummer / Figure number / Numéro de figure / Bildnummer / Numero della figura |
| Teile-Nummer | Teilenummer / Parts number / Numéro des pièces / Delnummer / Numero del pezzo |
| Symbol | Symbol / Symbol / Symbole / Symbol / Simbolo |
| Benennung | Benennung / Designation / Nomenclature / Benämning / Denominazione |
| Bemerkung | Bemerkung / Note / Note / Anmärkning / Osservazione |
| HG | Hauptgruppe / Main group / Groupe principale / Huvudgrupp / Gruppo principale |
| S | Seite / Page / Page / Sida / Pagina |

## TEXTSEITEN SYMBOLE / TEST PAGE SYMBOLS / SYMBOLES DES PAGES DE TEXTE / SYMBOLER AV TEXTSIDORNA / SIMBOLI DELLE PAGINE DI TESTO

In der Teilenummern-Spalte / In the parts number column / Dans la colonne des numéros des pièces / I delnummerkolumnen / Nella colonna dei numeri dei pezzi di ricambio

| | |
|---|---|
| a...z | Hinweis auf Bemerkungsfeld / Reference to the remarks field / Renvoi à case de notes / Hänvisning till anmärkningsfältet / Avvertenze nella casella delle osservazioni |
| E | Entfallen (Teil nicht mehr lieferbar)<br>Deleted (parts no longer available)<br>Supprimé (les pièces ne sont plus livrables)<br>Utfalla (delar kan inte mera leveras)<br>Non interessa (pezzi non sono più fornibili) |

In der Symbol-Spalte / In the symbol column / Dans la colonne des symboles / I symbolkolumnen / Nella colonna dei simboli

| | |
|---|---|
| A | Austauschbar durch die Teilenummer der nächsten Zeile<br>Replaceable by the parts number of the next line<br>Interchangeable avec les numéros des pièces de la ligne suivant<br>Kan utbytes med delnumret av nästa raden<br>Intercambiabile col numero dei pezzi di ricambio della prossima riga |
| L | Links / left / gauche / vänster / a sinsistra |
| R | Rechts / right / droite / höger / a destra |
| V | Vorn / front / avant / framför / anteriore, avanti |
| H | Hinten / rear / arrière / baktill / posteriore, dietro |
| O | Linkslenkung / Left-hand drive / Direction à gauche / Vänsterstyrning / Sterzo a sinistra |
| OO | Rechtslenkung / Right-hand drive / Direction à droite / Högerstyrning / Sterzo a destra |
| WW | Wahlweise / Optional / Facultatif / Till urval / A scelta |
| RS | Reparatursatz / Repair kit / Jeu de réparation / Reparationssats / Corredo di riparazione |
| DS | Dichtungssatz / Gasket set / Jeu de joints / Tatningssats / Corredo di guarnizioni |

In der Benennungs-Spalte / In the designation column / Dans la colonne de nomenclature / I benämningskolumnen / Nella colonna di denominazione

DIN-Abkürzungen / DIN abbreviations / Abréviations DIN / DIN-avkortningar / Abbreviazione DIN (norma industr. tedesca)

| | |
|---|---|
| BL MU | Blechmutter / Sheet metal nut / Ecrou Parker / Plåtmutter / Dado per lamiera |
| BL SHR | Blechschraube / Parker screw / Vis Parker / Plåtskruv / Vite di lamiera |
| DT RG | Dichtring / Sealing ring / Bague d'étanchéité / Packningsring / Anello di guarn. de tenuta |
| LIN BL SHR | Linsenblechschraube / Fillister head self-tapping screw / Vis parker à tète bombée / Plåtskruv med kullrigt huvud / Vite lentic di lamiere |
| LIN SHR | Linsenschraube / Fillister head screw / Vis à tète bombée / Skruv med kullrigt huvud / Vite testa cil. |
| LINSK BL SHR | Linsensenkblechschraube / Countersunk parker screw / Vis conique bombée pour tòle / Plåtskruv med försänkt huvud / Vite testa scasata calotta per lamiere |
| LIN SK SHR | Linsensenkschraube / Raised contersunk head screw / Vis à tète fraisée bombée / Skruv med försänkt kullrigt huvud / Vite testa scasata con cal. |
| MU | Mutter / Nut / Moer / Mutter / Dado |
| PA SHB | Passcheibe / Disc ring / Pasring / Passbricka / Anello piatto |
| SHR | Schraube / Screw / Vis / Bult / Vite |
| SK BL SHR | Senkblechschraube / Countersunk self-tapping screw / Vis parker à tète fraisée / Plåtskruv med försänkt huvud / Vite a testa scasata p. lamiere |
| SK SHR | Senkschraube / Countersunk head screw / Vis à tète fraisée / Skruv med försänkt huvud / Vite a testa scasata |
| STI SHR | Stiftschraube / Stud / Goujon fileté / Pinnbult / Vite a perno |
| VSL SHR | Verschlußschraube / Plug screw / Boucon fileté / Skruvpropp / Tappo |
| ZYL SHR | Zylinderschraube / Fillister head screw / Ecrou cylindrique / Cylinderskruv / Dado cilindro |
| ZYL STI | Zylinderstift / Dowel pin / Goupille cylindrique / Cylinderstift / Perno di centraggio |
| 4 KT MU | Vierkantmutter / Square nut / Ecrou carré / Fyrkantsmutter / Dado a testa cuadra |
| 6 KT MU | Sechskantmutter / Hexagon nut / Ecrou à six pans / Sekskantmutter / Dado esagonale |
| 6 KT SHR | Sechskantschraube / Hexagon head nut / Vis hexagonale / Sekskantbult / Vite esagonale |

Sonstige Abkürzungen / Other abbreviations / Autres abréviations / Övriga avkortningar / Altre abbreviazioni

| | |
|---|---|
| kpl. | komplett / complete / complet / komplett / completo |
| dito | Benennung identisch mit vorhergehendem Textteil / Designation identical with preceding text part / Dénomination identique avec le texte précédent / Benämning identisk med föregående text / Denominazione identica con la parte del testo precedente |
| ∅ | Durchmesser / Diameter / Diamètre / Diameter / Diametro |

In der Baumusterspalte / In the type column / Dans la colonne du modèle type / I typkolumnen / Nella colonna dei modelli di costruzione

| | |
|---|---|
| X | laufende Meter oder Stück nach Bedarf / per running metre or unit, as required / par mètre courant ou pièce suivant les besoin / per löpande meter eller stycke efter behov / metri lunghi o pezzi a secondo del fabbisogno |

Hinweis und Bemerkungsfeld / Remarks and comments box / Indication concernant la colone d'observations / Hänvisnings- och anteckningsfält / Casella di indicazioni e di osservazioni

| | |
|---|---|
| a...z | Bemerkung für alle mit diesem Kleinbuchstaben gekennzeichneten Teilenummern / Note for all part numbers identified by these small letters / Note pour tous les numéros des pièces détachées repérés par ces minuscules / Anmärkning för alla delnummer kännetecknad med denna smål bokstäver / Osservazione per tutti i numeri di pezzi di ricambio contrassegnati con questa lettera minuscola |
| i.V.m. | nur in Verbindung mit / only in connection with / seulement en connexion avec / endast in samband med / solo un collegamento con |
| n.p.z. | nur passend zu / only suitable for / seulement assorti à / endast in samband med / adatto solo per |
| → Mot | bis Motor-Nummer / up to engine no / Jusqu'au moteur no / till motor nr / fino a motore-numero |
| Mot → | ab Motor-Nummer / as from engine no / à partir du moteur / från motor nr / a partire dal motore-numero |
| dito | Motor-Nummer identisch mit vorhergehender Bemerkung / Engine no. indentical with preceding note / Numéro moteur identique avec la note précédente / Motor nr identisk med föregående anmärkning / Motore-numero identico con la precedente osservazione |

Um Ihre Kunden jederzeit zufriedenstellen zu können, benötigen Sie stets einen ausreichenden Vorrat an Teilen und Zubehör.

Eine exakte Disposition und eindeutige rechtzeitige Bestellungen sind hierfür die wichtigsten Voraussetzungen.

Was ist bei den Teile-Bestellungen zu beachten?

1. Denken Sie immer an die 3 Grundangaben: Teilenummer, Bezeichnung, Stückzahl.

2. Führen Sie Ihre Bestellungen stets in numerischer Reihenfolge auf.

3. Vergessen Sie bei Ihrer Bestellung nicht die Unterschrift, den Firmenstempel, das Bestelldatum sowie Versandvorschriften.

4. Nur bei schriftlich aufgegebenen Bestellungen kann der ausliefernde Partner die Gewähr für die Richtigkeit der Lieferung übernehmen; bemühen Sie sich daher bitte, Ihre Bestellungen weitgehend schriftlich (möglichst per Schreibmaschine) zu erteilen.

5. Teile-Bestellungen und Teiledienst betreffende Korrespondenz sind zu richten an:

   BMW Marine GmbH.
   Ingolstädter Strasse 65c
   8000 München 45
   Abt. Teiledienst

   Fernschreiber:
   52 15580 bmwm d

6. Telefonische Bestellungen können unter der Nummer (089) 3186–212 / 279 aufgegeben werden.

7. Alle Teile-Sendungen erfolgen unter Zugrundelegung der jeweils gültigen Verkaufs- und Lieferbedingungen der BMW Marine GmbH.

To be able to meet your customers' requirements at any time you always should have sufficient stock of parts and accessories.

Exact arrangements and clear orders placed in good time are the most important prerequisites to solve this problem in an adequate way.

What should be observed in ordering spare parts?

1. Always remember the three basic data: parts number, designation, quantity.

2. Always give our order in numerical sequence.

3. Prior to dispatching your order make sure that you have not forgotten your signature, your firm's seal, date of order and shipping instructions.

4. Only an order in writing ensures correct delivery by the supplier. Therefore, try by all means to give your order in writing (if possible typed on a typewriter).

5. As for spare parts orders and parts service address your correspondence to:

   BMW Marine GmbH.
   Ingolstädter Strasse 65c
   D-8000 München 45
   Federal Republic of Germany
   Abt. Teiledienst

   Telex:
   52 15580 bmwm d

V12 Engineering
Box 50, Ontario, Canada P0X 1C0
www.bmwmarine.net

6. Orders by telephone can be placed dialling (089) 3186–212 / 279

7. All spare parts deliveries are subject to the Conditions of Sale and Delivery of the BMW Marine GmbH being in force at that time.

Pour être à même de satisfaire votre clientéle en tout temps vous avez besoin toujours d'un stock de piéces de rechange et c'accessoires suffisant.

Une disposition exacte et des commandes claires données à temps sont les conditions les plug importantes à cela.

Qu'est-ce qu'il faut prendre en considération en commandant des piéces de rechange?

1. Rappelez toumours les 3 données de base: Numéro de la piéce de rechange, nomenclature, nombre des piéces.

2. Donnez votre commande toujours en ordre numérique.

3. N'oubliez pas la signature, le cachet de votre maison, la date de commande et les instructions d'expédition.

4. Le fournisseur ne peut garantir l'exactitude de la livraison que si la commande est donnée en forme écrite. Pour cette raison essayez en tout cas de donner votre commande par écrit (dans la mesure possible tapée à la machine).

5. Adressez votre correspondance concernant des commandes des piéces de rechange et le service de rechange à:

   BMW Marine GmbH.
   Ingolstädter Strasse 65c
   D-8000 München 45
   Abt. Teiledienst

   Telex:
   52 15580 bmwm d

6. Les commandes peuvent être données par téléphone sous le numéro (089) 3186–212 / 279

7. Toutes les fournitures des piéces de rechange sont effectuées à la base des Conditions de Vente et de Livraison des la BMW Marine GmbH.

Ni kan alltid tillfredsställa Era kunders önskemål genom att hålla en viss mängd reservdelar och tillbehör i lager.

Detta förutsätter emellertid att dispositionen gjorts exakt och att ordern är klar och tydlig och att den lämnats in i god tid.

Vad måste man ange, när man beställer?

1. Tänk alltid på 3 grunduppgifter: Delnummer, benämning, antal.

2. Förse alltid de beställda varorna med löpande nummer.

3. Glöm inte att förse ordern med Er underteckning, firmans stämpel, datum och leveransvillkor.

4. Leverantören kan garantera en riktig leverans bara då ordern gjorts skriftligt. Vi ber Er därför göra Era beställningar skriftligt såvitt möjligt (med skrivmaskin om möjligt).

5. Adressera all korrespondens rörande beställningar av reservdelar eller avdelningen för reservdelar till:

   BMW Marine GmbH
   Ingolstädter Straße 65 c
   D-8000 München 45
   Abt. Teiledienst

   Telex:
   52 15580 bmwm d

V12 Engineering
Box 50, Ontario, Canada P0X 1C0
www.bmwmarine.net

6. Ni kan ringa in Er beställning på telefon (089) 3186–212 / 279

7. Alla reservdelar avsändes under tillämpning av BMW Marine GmbH:s gällande försäljnings- och leveransbestämmelser.

Per poter accontentare in qualsiasi momento i Vostri clienti, avete bisogno di una sufficiente scorta di pezzi di ricambio e di accessori.

Un'esatta disposizione ed una chiara e tempestiva ordinazione perciò sono le più importanti presupposte.

Che cosa bisogna osservare in occasione delle ordinazioni di pezzi di ricambio?

1. Tenere sempre in considerazione le 3 indicazioni base: numero del pezzo, denominazione, quantità dei pezzi.

2. Riportare sempre le ordinazioni in successione numerica.

3. Non dimenticare in occasione della Vostra ordinazione la firma, il timbro della ditta, la data di ordinazione nonchè le prescrizioni di spedizione.

4. Solo in caso di ordinazione scritta il partner fornitore può assumersi la garanzia per la regolarità della fornitura: siete pertanto pregati di passare le Vostre ordinazioni in larga misura in forma scritta (possibilmente con macchina da scrivere).

5. La corrispondenza riguardante le ordinazioni dei pezzi di ricambio nonchè il servizio pezzi di ricambio và indirizzata alla:

   BMW Marine GmbH.
   Ingolstädter Strasse 65c
   8000 München 45
   Abt. Teiledienst

   Fernschreiber:
   52 15580 bmwm d

6. Ordinazioni telefoniche possono essere passare scegliendo il numero (089) 3186 – 212/279.

7. Tutte le spedizioni dei pezzi di ricambio avvengono in base alle rispettive valide condizioni di vendita e di fornitura della BMW Marine GmbH.

Teilenummern-Index
Part Number index
Index des numéros de pièces
Reservdelsnummer-Index
Indice dei numeri dei pezzi di ricambio



| Teile-Nummer | HG | S | Nr. | Teile-Nummer | HG | S | Nr. | Teile-Nummer | HG | S | Nr. |
|---|---|---|---|---|---|---|---|---|---|---|---|
| 07 11 9 902 510 | 62 | 4 | 11 | 07 11 9 909 129 | 11 | 16 | 9 | 07 11 9 913 624 | 11 | 9 | 32 |
| 07 11 9 902 520 | 62 | 2 | 2 | 07 11 9 909 129 | 11 | 17 | 9 | 07 11 9 913 624 | 11 | 20 | 27 |
| 07 11 9 902 520 | 62 | 3 | 26 | 07 11 9 909 186 | 11 | 1 | 17 | 07 11 9 913 624 | 27 | 5 | 5 |
| 07 11 9 902 520 | 62 | 1 | 11 | 07 11 9 909 186 | 11 | 2 | 17 | 07 11 9 913 624 | 11 | 7 | 3 |
| 07 11 9 904 817 | 27 | 3 | 22 | 07 11 9 909 452 | 11 | 10 | 31 | 07 11 9 913 627 | 11 | 20 | 3 |
| 07 11 9 906 020 | 74 | 1 | 14 | 07 11 9 909 452 | 11 | 15 | 14 | 07 11 9 913 627 | 12 | 6 | 8 |
| 07 11 9 906 025 | 74 | 1 | 4 | 07 11 9 909 458 | 13 | 8 | 26 | 07 11 9 913 643 | 11 | 1 | 22 |
| 07 11 9 907 688 | 12 | 5 | 9 | 07 11 9 909 469 | 11 | 6 | 25 | 07 11 9 913 643 | 11 | 2 | 22 |
| 07 11 9 908 295 | 17 | 4 | 21 | 07 11 9 912 303 | 17 | 3 | 18 | 07 11 9 913 644 | 27 | 5 | 7 |
| 07 11 9 908 295 | 11 | 20 | 24 | 07 11 9 912 506 | 12 | 1 | 12 | 07 11 9 913 644 | 27 | 9 | 8 |
| 07 11 9 908 295 | 17 | 5 | 21 | 07 11 9 912 506 | 13 | 1 | 24 | 07 11 9 913 644 | 12 | 1 | 17 |
| 07 11 9 908 297 | 21 | 1 | 5 | 07 11 9 912 562 | 12 | 1 | 26 | 07 11 9 913 655 | 11 | 2 | 12 |
| 07 11 9 908 310 | 17 | 5 | 22 | 07 11 9 912 562 | 13 | 9 | 26 | 07 11 9 913 655 | 11 | 19 | 20 |
| 07 11 9 908 310 | 17 | 4 | 22 | 07 11 9 912 567 | 27 | 5 | 18 | 07 11 9 913 657 | 13 | 8 | 31 |
| 07 11 9 908 365 | 17 | 4 | 23 | 07 11 9 912 567 | 27 | 9 | 7 | 07 11 9 913 662 | 27 | 1 | 2 |
| 07 11 9 908 365 | 17 | 5 | 23 | 07 11 9 912 578 | 27 | 9 | 7 | 07 11 9 913 662 | 13 | 9 | 25 |
| 07 11 9 908 397 | 21 | 1 | 9 | 07 11 9 912 868 | 27 | 2 | 26 | 07 11 9 913 662 | 27 | 8 | 3 |
| 07 11 9 908 402 | 21 | 1 | 6 | 07 11 9 913 089 | 12 | 6 | 5 | 07 11 9 913 662 | 13 | 1 | 14 |
| 07 11 9 909 012 | 11 | 2 | 10 | 07 11 9 913 209 | 13 | 9 | 1 | 07 11 9 913 662 | 12 | 1 | 29 |
| 07 11 9 909 012 | 11 | 1 | 10 | 07 11 9 913 212 | 12 | 1 | 7 | 07 11 9 913 676 | 27 | 4 | 13 |
| 07 11 9 909 063 | 11 | 2 | 11 | 07 11 9 913 218 | 11 | 14 | 10 | 07 11 9 913 676 | 12 | 1 | 12 |
| 07 11 9 909 063 | 11 | 1 | 11 | 07 11 9 913 218 | 11 | 13 | 10 | 07 11 9 913 676 | 27 | 1 | 6 |
| 07 11 9 909 067 | 11 | 21 | 3 | 07 11 9 913 241 | 27 | 8 | 13 | 07 11 9 913 676 | 27 | 8 | 7 |
| 07 11 9 909 067 | 11 | 22 | 3 | 07 11 9 913 241 | 27 | 4 | 6 | 07 11 9 913 679 | 12 | 1 | 14 |
| 07 11 9 909 080 | 27 | 9 | 28 | 07 11 9 913 241 | 13 | 2 | 2 | 07 11 9 913 837 | 27 | 8 | 3 |
| 07 11 9 909 082 | 11 | 5 | 25 | 07 11 9 913 251 | 13 | 1 | 27 | 07 11 9 913 837 | 27 | 8 | 6 |
| 07 11 9 909 098 | 11 | 1 | 27 | 07 11 9 913 251 | 27 | 1 | 13 | 07 11 9 913 837 | 27 | 1 | 5 |
| 07 11 9 909 098 | 11 | 2 | 27 | 07 11 9 913 442 | 17 | 4 | 31 | 07 11 9 913 837 | 27 | 4 | 10 |
| 07 11 9 909 099 | 11 | 6 | 7 | 07 11 9 913 442 | 17 | 5 | 31 | 07 11 9 913 839 | 27 | 4 | 15 |
| 07 11 9 909 099 | 11 | 5 | 7 | 07 11 9 913 472 | 17 | 1 | 18 | 07 11 9 913 880 | 17 | 3 | 23 |
| 07 11 9 909 108 | 11 | 5 | 27 | 07 11 9 913 477 | 17 | 2 | 14 | 07 11 9 913 892 | 11 | 23 | 7 |
| 07 11 9 909 108 | 11 | 6 | 27 | 07 11 9 913 616 | 11 | 9 | 13 | 07 11 9 913 895 | 11 | 23 | 12 |
| 07 11 9 909 110 | 11 | 6 | 26 | 07 11 9 913 624 | 11 | 8 | 3 | 07 11 9 913 904 | 11 | 10 | 6 |
| 07 11 9 909 110 | 11 | 5 | 26 | 07 11 9 913 624 | 27 | 9 | 6 | 07 11 9 913 904 | 11 | 11 | 13 |

Teilenummern-Index
Part Number index
Index des numéros de pièces
Reservdelsnummer-Index
Indice dei numeri dei pezzi di ricambio



| Teile-Nummer | HG | S | Nr. | Teile-Nummer | HG | S | Nr. | Teile-Nummer | HG | S | Nr. |
|---|---|---|---|---|---|---|---|---|---|---|---|
| 07 11 9 913 908 | 27 | 6 | 34 | 07 11 9 919 252 | 11 | 8 | 28 | 07 11 9 919 978 | 27 | 2 | 38 |
| 07 11 9 917 403 | 13 | 4 | 6 | 07 11 9 919 252 | 11 | 2 | 25 | 07 11 9 919 978 | 13 | 9 | 22 |
| 07 11 9 917 403 | 13 | 5 | 6 | 07 11 9 919 362 | 12 | 4 | 17 | 07 11 9 919 979 | 27 | 2 | 46 |
| 07 11 9 917 409 | 13 | 6 | 12 | 07 11 9 919 596 | 11 | 18 | 3 | 07 11 9 921 077 | 12 | 4 | 11 |
| 07 11 9 918 849 | 11 | 9 | 8 | 07 11 9 919 597 | 11 | 2 | 15 | 07 11 9 921 098 | 12 | 4 | 20 |
| 07 11 9 919 004 | 11 | 15 | 2 | 07 11 9 919 597 | 11 | 1 | 15 | 07 11 9 921 631 | 12 | 1 | 21 |
| 07 11 9 919 004 | 11 | 10 | 11 | 07 11 9 919 601 | 11 | 10 | 26 | 07 11 9 921 631 | 12 | 3 | 10 |
| 07 11 9 919 015 | 17 | 3 | 17 | 07 11 9 919 601 | 11 | 11 | 8 | 07 11 9 922 028 | 12 | 5 | 6 |
| 07 11 9 919 015 | 11 | 5 | 29 | 07 11 9 919 657 | 13 | 2 | 17 | 07 11 9 922 028 | 12 | 6 | 9 |
| 07 11 9 919 015 | 11 | 6 | 29 | 07 11 9 919 694 | 11 | 9 | 22 | 07 11 9 922 028 | 12 | 1 | 5 |
| 07 11 9 919 016 | 27 | 5 | 14 | 07 11 9 919 694 | 12 | 1 | 19 | 07 11 9 922 038 | 13 | 2 | 20 |
| 07 11 9 919 016 | 27 | 9 | 19 | 07 11 9 919 728 | 11 | 15 | 8 | 07 11 9 922 038 | 13 | 1 | 3 |
| 07 11 9 919 112 | 17 | 5 | 17 | 07 11 9 919 728 | 11 | 10 | 17 | 07 11 9 922 054 | 13 | 3 | 14 |
| 07 11 9 919 112 | 17 | 4 | 17 | 07 11 9 919 732 | 27 | 2 | 12 | 07 11 9 922 058 | 13 | 1 | 7 |
| 07 11 9 919 112 | 11 | 2 | 20 | 07 11 9 919 738 | 13 | 8 | 20 | 07 11 9 922 058 | 12 | 1 | 3 |
| 07 11 9 919 112 | 11 | 1 | 20 | 07 11 9 919 784 | 13 | 1 | 6 | 07 11 9 922 058 | 17 | 5 | 28 |
| 07 11 9 919 114 | 27 | 2 | 33 | 07 11 9 919 925 | 11 | 7 | 5 | 07 11 9 922 058 | 12 | 4 | 32 |
| 07 11 9 919 131 | 11 | 21 | 15 | 07 11 9 919 925 | 11 | 8 | 5 | 07 11 9 922 058 | 11 | 20 | 25 |
| 07 11 9 919 131 | 11 | 22 | 15 | 07 11 9 919 935 | 13 | 2 | 19 | 07 11 9 922 058 | 17 | 4 | 28 |
| 07 11 9 919 140 | 11 | 4 | 13 | 07 11 9 919 939 | 11 | 1 | 6 | 07 11 9 922 078 | 11 | 15 | 12 |
| 07 11 9 919 140 | 11 | 3 | 13 | 07 11 9 919 939 | 21 | 1 | 2 | 07 11 9 922 078 | 11 | 10 | 10 |
| 07 11 9 919 140 | 11 | 5 | 28 | 07 11 9 919 939 | 11 | 9 | 6 | 07 11 9 922 082 | 13 | 9 | 19 |
| 07 11 9 919 140 | 11 | 6 | 28 | 07 11 9 919 939 | 11 | 2 | 6 | 07 11 9 922 082 | 13 | 10 | 4 |
| 07 11 9 919 171 | 27 | 8 | 18 | 07 11 9 919 939 | 13 | 2 | 16 | 07 11 9 922 087 | 13 | 8 | 29 |
| 07 11 9 919 171 | 27 | 4 | 4 | 07 11 9 919 965 | 17 | 4 | 7 | 07 11 9 922 087 | 17 | 2 | 5 |
| 07 11 9 919 187 | 17 | 4 | 19 | 07 11 9 919 965 | 11 | 11 | 18 | 07 11 9 922 087 | 12 | 5 | 5 |
| 07 11 9 919 187 | 11 | 21 | 7 | 07 11 9 919 965 | 11 | 10 | 30 | 07 11 9 922 087 | 11 | 9 | 37 |
| 07 11 9 919 187 | 11 | 19 | 11 | 07 11 9 919 965 | 17 | 5 | 7 | 07 11 9 922 087 | 27 | 9 | 29 |
| 07 11 9 919 187 | 17 | 5 | 19 | 07 11 9 919 969 | 11 | 8 | 21 | 07 11 9 922 087 | 13 | 8 | 3 |
| 07 11 9 919 187 | 11 | 22 | 7 | 07 11 9 919 969 | 11 | 2 | 7 | 07 11 9 922 087 | 13 | 1 | 2 |
| 07 11 9 919 209 | 11 | 2 | 34 | 07 11 9 919 969 | 11 | 7 | 21 | 07 11 9 922 087 | 27 | 9 | 26 |
| 07 11 9 919 209 | 11 | 1 | 12 | 07 11 9 919 969 | 11 | 19 | 18 | 07 11 9 922 087 | 27 | 5 | 19 |
| 07 11 9 919 252 | 11 | 7 | 28 | 07 11 9 919 969 | 11 | 1 | 7 | 07 11 9 922 113 | 11 | 16 | 10 |
| 07 11 9 919 252 | 11 | 1 | 25 | 07 11 9 919 978 | 11 | 9 | 11 | 07 11 9 922 113 | 11 | 23 | 3 |

Teilenummern-Index
Part Number index
Index des numéros de pièces
Reservdelsnummer-Index
Indice dei numeri dei pezzi di ricambio



| Teile-Nummer | HG | S | Nr. | Teile-Nummer | HG | S | Nr. | Teile-Nummer | HG | S | Nr. |
|---|---|---|---|---|---|---|---|---|---|---|---|
| 07 11 9 922 113 | 12 | 4 | 19 | 07 11 9 931 094 | 11 | 23 | 4 | 07 11 9 933 060 | 11 | 14 | 18 |
| 07 11 9 922 113 | 11 | 17 | 10 | 07 11 9 931 660 | 27 | 2 | 39 | 07 11 9 933 060 | 11 | 13 | 18 |
| 07 11 9 922 113 | 27 | 4 | 11 | 07 11 9 932 020 | 12 | 1 | 4 | 07 11 9 933 082 | 17 | 4 | 32 |
| 07 11 9 922 113 | 27 | 8 | 8 | 07 11 9 932 020 | 12 | 2 | 13 | 07 11 9 933 082 | 13 | 8 | 21 |
| 07 11 9 922 113 | 17 | 3 | 24 | 07 11 9 932 033 | 13 | 9 | 2 | 07 11 9 933 082 | 17 | 5 | 32 |
| 07 11 9 922 113 | 27 | 1 | 4 | 07 11 9 932 043 | 12 | 1 | 6 | 07 11 9 933 082 | 17 | 2 | 15 |
| 07 11 9 922 133 | 12 | 4 | 28 | 07 11 9 932 062 | 12 | 1 | 2 | 07 11 9 933 096 | 11 | 9 | 5 |
| 07 11 9 922 150 | 27 | 2 | 36 | 07 11 9 932 062 | 11 | 10 | 29 | 07 11 9 933 096 | 13 | 10 | 5 |
| 07 11 9 922 156 | 21 | 1 | 8 | 07 11 9 932 062 | 11 | 11 | 17 | 07 11 9 933 096 | 13 | 1 | 5 |
| 07 11 9 922 176 | 11 | 23 | 2 | 07 11 9 932 062 | 13 | 3 | 13 | 07 11 9 933 096 | 11 | 8 | 20 |
| 07 11 9 922 700 | 13 | 2 | 5 | 07 11 9 932 072 | 17 | 4 | 29 | 07 11 9 933 096 | 11 | 7 | 4 |
| 07 11 9 922 700 | 27 | 1 | 10 | 07 11 9 932 072 | 17 | 5 | 29 | 07 11 9 933 096 | 13 | 9 | 24 |
| 07 11 9 930 840 | 11 | 15 | 15 | 07 11 9 932 081 | 13 | 1 | 20 | 07 11 9 933 096 | 11 | 7 | 20 |
| 07 11 9 930 840 | 11 | 10 | 32 | 07 11 9 932 081 | 12 | 1 | 18 | 07 11 9 933 096 | 11 | 15 | 9 |
| 07 11 9 931 027 | 12 | 5 | 7 | 07 11 9 932 081 | 11 | 9 | 14 | 07 11 9 933 096 | 13 | 8 | 4 |
| 07 11 9 931 027 | 12 | 6 | 13 | 07 11 9 932 081 | 17 | 2 | 6 | 07 11 9 933 096 | 11 | 1 | 23 |
| 07 11 9 931 036 | 12 | 2 | 2 | 07 11 9 932 081 | 13 | 12 | 5 | 07 11 9 933 096 | 11 | 2 | 23 |
| 07 11 9 931 044 | 13 | 1 | 12 | 07 11 9 932 081 | 13 | 11 | 5 | 07 11 9 933 096 | 11 | 19 | 21 |
| 07 11 9 931 044 | 17 | 1 | 19 | 07 11 9 932 095 | 11 | 21 | 16 | 07 11 9 933 096 | 11 | 8 | 4 |
| 07 11 9 931 067 | 12 | 6 | 7 | 07 11 9 932 095 | 12 | 4 | 12 | 07 11 9 933 096 | 12 | 4 | 18 |
| 07 11 9 931 067 | 17 | 5 | 24 | 07 11 9 932 095 | 27 | 5 | 4 | 07 11 9 933 096 | 11 | 18 | 4 |
| 07 11 9 931 067 | 12 | 1 | 27 | 07 11 9 932 095 | 27 | 9 | 5 | 07 11 9 933 096 | 11 | 10 | 18 |
| 07 11 9 931 067 | 12 | 5 | 4 | 07 11 9 932 095 | 11 | 22 | 16 | 07 11 9 933 127 | 11 | 7 | 6 |
| 07 11 9 931 067 | 17 | 4 | 24 | 07 11 9 932 104 | 11 | 17 | 11 | 07 11 9 933 127 | 11 | 8 | 6 |
| 07 11 9 931 067 | 11 | 20 | 2 | 07 11 9 932 104 | 11 | 16 | 11 | 07 11 9 933 127 | 11 | 2 | 32 |
| 07 11 9 931 067 | 13 | 1 | 33 | 07 11 9 932 112 | 27 | 4 | 16 | 07 11 9 933 127 | 12 | 4 | 27 |
| 07 11 9 931 067 | 27 | 1 | 3 | 07 11 9 932 112 | 27 | 8 | 2 | 07 11 9 933 127 | 11 | 1 | 32 |
| 07 11 9 931 067 | 27 | 4 | 14 | 07 11 9 932 652 | 11 | 13 | 4 | 07 11 9 933 149 | 12 | 1 | 22 |
| 07 11 9 931 067 | 27 | 8 | 2 | 07 11 9 932 652 | 11 | 14 | 4 | 07 11 9 933 149 | 12 | 3 | 9 |
| 07 11 9 931 067 | 11 | 9 | 39 | 07 11 9 932 685 | 27 | 7 | 16 | 07 11 9 933 241 | 13 | 8 | 30 |
| 07 11 9 931 072 | 11 | 5 | 17 | 07 11 9 932 686 | 27 | 7 | 15 | 07 11 9 933 509 | 27 | 2 | 6 |
| 07 11 9 931 072 | 11 | 6 | 17 | 07 11 9 932 687 | 27 | 7 | 14 | 07 11 9 933 528 | 13 | 8 | 8 |
| 07 11 9 931 088 | 27 | 2 | 37 | 07 11 9 932 852 | 13 | 2 | 12 | 07 11 9 934 035 | 11 | 9 | 40 |
| 07 11 9 931 088 | 21 | 1 | 7 | 07 11 9 932 852 | 13 | 1 | 21 | 07 11 9 934 060 | 13 | 9 | 31 |

Teilenummern-Index
Part Number index
Index des numéros de pièces
Reservdelsnummer-Index
Indice dei numeri dei pezzi di ricambio



| Teile-Nummer | HG | S | Nr. | Teile-Nummer | HG | S | Nr. | Teile-Nummer | HG | S | Nr. |
|---|---|---|---|---|---|---|---|---|---|---|---|
| 07 11 9 934 126 | 11 | 17 | 6 | 07 11 9 941 393 | 11 | 10 | 25 | 07 11 9 963 042 | 13 | 9 | 21 |
| 07 11 9 934 126 | 11 | 16 | 6 | 07 11 9 941 416 | 11 | 9 | 4 | 07 11 9 963 072 | 11 | 1 | 21 |
| 07 11 9 934 133 | 11 | 14 | 7 | 07 11 9 941 431 | 11 | 20 | 11 | 07 11 9 963 072 | 11 | 2 | 21 |
| 07 11 9 934 133 | 11 | 13 | 7 | 07 11 9 941 460 | 11 | 19 | 7 | 07 11 9 963 073 | 17 | 5 | 18 |
| 07 11 9 934 650 | 11 | 12 | 3 | 07 11 9 941 465 | 11 | 18 | 2 | 07 11 9 963 073 | 17 | 4 | 18 |
| 07 11 9 934 650 | 13 | 8 | 2 | 07 11 9 941 495 | 11 | 16 | 8 | 07 11 9 963 129 | 13 | 4 | 3 |
| 07 11 9 934 719 | 11 | 14 | 3 | 07 11 9 941 495 | 11 | 17 | 8 | 07 11 9 963 129 | 13 | 7 | 7 |
| 07 11 9 934 719 | 11 | 13 | 3 | 07 11 9 941 496 | 11 | 10 | 9 | 07 11 9 963 129 | 13 | 6 | 7 |
| 07 11 9 936 432 | 12 | 1 | 11 | 07 11 9 941 496 | 11 | 11 | 16 | 07 11 9 963 129 | 13 | 5 | 3 |
| 07 11 9 937 223 | 11 | 2 | 26 | 07 11 9 941 498 | 11 | 3 | 3 | 07 11 9 963 200 | 11 | 19 | 12 |
| 07 11 9 937 223 | 11 | 1 | 26 | 07 11 9 941 498 | 11 | 4 | 3 | 07 11 9 963 201 | 13 | 5 | 13 |
| 07 11 9 937 274 | 17 | 4 | 4 | 07 11 9 942 033 | 17 | 5 | 5 | 07 11 9 963 201 | 17 | 3 | 6 |
| 07 11 9 937 274 | 17 | 5 | 4 | 07 11 9 942 033 | 17 | 4 | 5 | 07 11 9 963 201 | 13 | 6 | 4 |
| 07 11 9 937 275 | 27 | 5 | 20 | 07 11 9 942 034 | 11 | 12 | 9 | 07 11 9 963 201 | 13 | 4 | 12 |
| 07 11 9 937 306 | 27 | 9 | 27 | 07 11 9 942 034 | 13 | 8 | 17 | 07 11 9 963 201 | 13 | 3 | 10 |
| 07 11 9 937 332 | 17 | 4 | 3 | 07 11 9 942 126 | 11 | 2 | 19 | 07 11 9 963 201 | 27 | 2 | 34 |
| 07 11 9 937 332 | 17 | 5 | 3 | 07 11 9 942 126 | 11 | 1 | 19 | 07 11 9 963 201 | 13 | 7 | 4 |
| 07 11 9 941 304 | 11 | 9 | 38 | 07 11 9 942 156 | 27 | 3 | 3 | 07 11 9 963 201 | 12 | 6 | 12 |
| 07 11 9 941 341 | 27 | 4 | 18 | 07 11 9 943 488 | 27 | 2 | 41 | 07 11 9 963 201 | 11 | 22 | 9 |
| 07 11 9 941 341 | 27 | 1 | 8 | 07 11 9 945 115 | 13 | 9 | 11 | 07 11 9 963 201 | 11 | 20 | 21 |
| 07 11 9 941 341 | 27 | 8 | 15 | 07 11 9 948 511 | 74 | 1 | 13 | 07 11 9 963 201 | 11 | 21 | 9 |
| 07 11 9 941 345 | 27 | 8 | 16 | 07 11 9 951 040 | 11 | 13 | 2 | 07 11 9 963 201 | 12 | 5 | 14 |
| 07 11 9 941 345 | 27 | 1 | 9 | 07 11 9 951 040 | 11 | 14 | 2 | 07 11 9 963 252 | 27 | 4 | 3 |
| 07 11 9 941 345 | 27 | 4 | 19 | 07 11 9 951 074 | 27 | 10 | 2 | 07 11 9 963 252 | 27 | 8 | 17 |
| 07 11 9 941 351 | 27 | 2 | 47 | 07 11 9.951 077 | 11 | 14 | 12 | 07 11 9 963 290 | 11 | 4 | 4 |
| 07 11 9 941 353 | 11 | 6 | 20 | 07 11 9 951 077 | 11 | 13 | 12 | 07 11 9 963 290 | 11 | 6 | 4 |
| 07 11 9 941 353 | 11 | 5 | 20 | 07 11 9 951 078 | 27 | 7 | 21 | 07 11 9 963 290 | 11 | 22 | 17 |
| 07 11 9 941 365 | 13 | 9 | 15 | 07 11 9 963 034 | 13 | 6 | 16 | 07 11 9 963 290 | 11 | 21 | 17 |
| 07 11 9 941 385 | 27 | 9 | 12 | 07 11 9 963 034 | 13 | 7 | 16 | 07 11 9 963 290 | 17 | 1 | 17 |
| 07 11 9 941 385 | 13 | 9 | 32 | 07 11 9 963 034 | 13 | 5 | 11 | 07 11 9 963 290 | 11 | 5 | 4 |
| 07 11 9 941 385 | 27 | 5 | 10 | 07 11 9 963 034 | 13 | 4 | 11 | 07 11 9 963 290 | 11 | 3 | 4 |
| 07 11 9 941 393 | 11 | 2 | 3 | 07 11 9 963 042 | 13 | 5 | 5 | 07 11 9 963 308 | 11 | 19 | 14 |
| 07 11 9 941 393 | 11 | 1 | 3 | 07 11 9 963 042 | 11 | 9 | 7 | 07 11 9 963 308 | 11 | 7 | 15 |
| 07 11 9 941 393 | 11 | 11 | 7 | 07 11 9 963 042 | 13 | 4 | 5 | 07 11 9 963 308 | 11 | 20 | 14 |

Teilenummern-Index
Part Number index
Index des numéros de pièces
Reservdelsnummer-Index
Indice dei numeri dei pezzi di ricambio



| Teile-Nummer | HG | S | Nr. | Teile-Nummer | HG | S | Nr. | Teile-Nummer | HG | S | Nr. |
|---|---|---|---|---|---|---|---|---|---|---|---|
| 07 11 9 963 308 | 11 | 8 | 15 | 07 12 9 952 111 | 11 | 9 | 17 | 11 11 1 331 794 | 11 | 16 | 12 |
| 07 11 9 963 354 | 11 | 1 | 24 | 11 00 1 333 352 | 11 | 1 | 28 | 11 11 1 331 794 | 11 | 17 | 12 |
| 07 11 9 963 354 | 11 | 8 | 7 | 11 00 1 333 353 | 11 | 2 | 28 | 11 11 1 331 794 | 11 | 5 | 21 |
| 07 11 9 963 354 | 11 | 22 | 14 | 11 00 1 761 085 | 11 | 1 | 28 | 11 11 1 331 807 | 11 | 4 | 17 |
| 07 11 9 963 354 | 11 | 21 | 14 | 11 00 1 761 086 | 11 | 2 | 28 | 11 11 1 331 807 | 11 | 3 | 7 |
| 07 11 9 963 354 | 11 | 2 | 24 | 11 00 1 761 134 | 11 | 5 | 31 | 11 11 1 331 808 | 11 | 1 | 18 |
| 07 11 9 963 354 | 11 | 7 | 7 | 11 00 1 761 135 | 11 | 6 | 31 | 11 11 1 331 808 | 11 | 2 | 18 |
| 07 11 9 963 355 | 11 | 19 | 10 | 11 11 1 280 915 | 11 | 20 | 9 | 11 11 1 333 256 | 11 | 1 | 31 |
| 07 11 9 963 473 | 11 | 3 | 17 | 11 11 1 280 915 | 11 | 19 | 19 | 11 11 1 333 256 | 11 | 2 | 31 |
| 07 11 9 963 473 | 11 | 4 | 16 | 11 11 1 331 770 | 11 | 1 | 16 | 11 11 1 333 303 | 11 | 1 | 29 |
| 07 11 9 972 516 | 13 | 7 | 3 | 11 11 1 331 770 | 11 | 2 | 16 | 11 11 1 333 303 | 11 | 2 | 29 |
| 07 11 9 972 516 | 13 | 5 | 10 | 11 11 1 331 771 | 11 | 14 | 8 | 11 11 1 333 341 | 11 | 3 | 15 |
| 07 11 9 972 516 | 13 | 6 | 3 | 11 11 1 331 771 | 11 | 13 | 8 | 11 11 1 333 341 | 11 | 4 | 7 |
| 07 11 9 972 516 | 13 | 4 | 10 | 11 11 1 331 772 | 11 | 13 | 9 | 11 11 1 333 346 | 11 | 4 | 14 |
| 07 11 9 978 254 | 62 | 3 | 16 | 11 11 1 331 772 | 11 | 14 | 9 | 11 11 1 333 346 | 11 | 3 | 14 |
| 07 11 9 978 254 | 62 | 2 | 18 | 11 11 1 331 773 | 11 | 13 | 6 | 11 11 1 333 381 | 11 | 2 | 30 |
| 07 11 9 978 254 | 62 | 1 | 5 | 11 11 1 331 773 | 11 | 14 | 6 | 11 11 1 333 381 | 11 | 1 | 30 |
| 07 11 9 978 254 | 62 | 4 | 4 | 11 11 1 331 774 | 11 | 1 | 8 | 11 11 1 333 384 | 11 | 2 | 33 |
| 07 11 9 978 256 | 62 | 3 | 6 | 11 11 1 331 774 | 11 | 2 | 8 | 11 11 1 333 384 | 11 | 1 | 33 |
| 07 11 9 978 256 | 62 | 2 | 8 | 11 11 1 331 775 | 11 | 2 | 9 | 11 11 1 333 599 | 11 | 3 | 10 |
| 07 11 9 978 256 | 62 | 1 | 19 | 11 11 1 331 775 | 11 | 1 | 9 | 11 11 1 333 599 | 11 | 4 | 9 |
| 07 11 9 978 279 | 62 | 1 | 8 | 11 11 1 331 783 | 11 | 8 | 23 | 11 11 1 761 140 | 11 | 3 | 11 |
| 07 11 9 986 274 | 27 | 11 | 12 | 11 11 1 331 783 | 11 | 7 | 23 | 11 11 1 761 140 | 11 | 6 | 24 |
| 07 11 9 986 280 | 27 | 6 | 10 | 11 11 1 331 784 | 11 | 8 | 22 | 11 11 1 761 140 | 11 | 5 | 24 |
| 07 11 9 986 280 | 27 | 11 | 12 | 11 11 1 331 784 | 11 | 7 | 22 | 11 11 1 761 140 | 11 | 4 | 11 |
| 07 11 9 986 298 | 27 | 11 | 12 | 11 11 1 331 790 | 11 | 1 | 13 | 11 11 1 761 141 | 11 | 5 | 6 |
| 07 11 9 987 302 | 13 | 2 | 9 | 11 11 1 331 790 | 11 | 2 | 13 | 11 11 1 761 141 | 11 | 6 | 6 |
| 07 11 9 999 050 | 74 | 1 | 8 | 11 11 1 331 791 | 11 | 1 | 14 | 11 11 1 761 142 | 11 | 5 | 8 |
| 07 11 9 999 100 | 74 | 1 | 10 | 11 11 1 331 791 | 11 | 2 | 14 | 11 11 1 761 551 | 11 | 3 | 1 |
| 07 11 9 999 117 | 74 | 1 | 7 | 11 11 1 331 792 | 11 | 3 | 7 | 11 11 1 761 552 | 11 | 4 | 1 |
| 07 11 9 999 119 | 74 | 1 | 6 | 11 11 1 331 792 | 11 | 4 | 17 | 11 11 1 763 209 | 11 | 4 | 15 |
| 07 11 9 999 141 | 74 | 1 | 11 | 11 11 1 331 793 | 11 | 3 | 7 | 11 11 1 763 209 | 11 | 3 | 16 |
| 07 12 9 922 410 | 27 | 8 | 14 | 11 11 1 331 793 | 11 | 4 | 17 | 11 11 1 763 372 | 11 | 1 | 1 |
| 07 12 9 952 104 | 11 | 9 | 20 | 11 11 1 331 794 | 11 | 6 | 21 | 11 11 1 763 373 | 11 | 2 | 1 |

Teilenummern-Index
Part Number index
Index des numéros de pièces
Reservdelsnummer-Index
Indice dei numeri dei pezzi di ricambio



| Teile-Nummer | HG | S | Nr. | Teile-Nummer | HG | S | Nr. | Teile-Nummer | HG | S | Nr. |
|---|---|---|---|---|---|---|---|---|---|---|---|
| 11 12 1 329 531 | 11 | 1 | 2 | 11 13 1 331 357 | 11 | 8 | 12 | 11 14 1 763 366 | 11 | 11 | 3 |
| 11 12 1 329 531 | 11 | 2 | 2 | 11 13 1 331 358 | 11 | 8 | 8 | 11 14 1 763 367 | 11 | 9 | 1 |
| 11 12 1 329 584 | 11 | 16 | 7 | 11 13 1 331 358 | 11 | 7 | 8 | 11 15 1 333 003 | 11 | 9 | 18 |
| 11 12 1 329 584 | 11 | 17 | 7 | 11 13 1 331 359 | 11 | 7 | 10 | 11 15 1 333 004 | 11 | 9 | 21 |
| 11 12 1 331 558 | 11 | 6 | 19 | 11 13 1 331 359 | 11 | 8 | 10 | 11 15 1 333 005 | 11 | 9 | 24 |
| 11 12 1 331 558 | 11 | 5 | 19 | 11 13 1 331 360 | 11 | 8 | 9 | 11 15 1 333 008 | 11 | 9 | 19 |
| 11 12 1 331 559 | 11 | 6 | 5 | 11 13 1 331 360 | 11 | 7 | 9 | 11 21 1 331 830 | 11 | 10 | 28 |
| 11 12 1 331 565 | 11 | 3 | 2 | 11 13 1 331 814 | 11 | 7 | 2 | 11 21 1 331 830 | 11 | 11 | 10 |
| 11 12 1 331 565 | 11 | 4 | 2 | 11 13 1 331 815 | 11 | 8 | 2 | 11 21 1 331 833 | 11 | 11 | 11 |
| 11 12 1 331 566 | 11 | 5 | 5 | 11 13 1 761 006 | 11 | 7 | 30 | 11 21 1 331 834 | 11 | 10 | 1 |
| 11 12 1 331 799 | 11 | 6 | 1 | 11 13 1 761 006 | 11 | 8 | 30 | 11 21 1 331 839 | 11 | 11 | 9 |
| 11 12 1 331 800 | 11 | 5 | 1 | 11 13 1 761 023 | 11 | 8 | 31 | 11 21 1 331 839 | 11 | 10 | 27 |
| 11 12 1 331 806 | 11 | 5 | 22 | 11 13 1 761 023 | 11 | 7 | 31 | 11 21 1 333 250 | 11 | 11 | 10 |
| 11 12 1 331 806 | 11 | 6 | 22 | 11 13 1 761 034 | 11 | 7 | 1 | 11 21 1 333 250 | 11 | 10 | 28 |
| 11 12 1 331 810 | 11 | 6 | 18 | 11 13 1 761 035 | 11 | 8 | 1 | 11 21 1 333 829 | 11 | 11 | 6 |
| 11 12 1 331 810 | 11 | 5 | 18 | 11 14 1 331 818 | 11 | 9 | 12 | 11 21 1 333 829 | 11 | 10 | 24 |
| 11 12 1 333 131 | 11 | 6 | 23 | 11 14 1 331 819 | 11 | 9 | 15 | 11 22 1 329 038 | 11 | 11 | 15 |
| 11 12 1 333 131 | 11 | 5 | 23 | 11 14 1 331 820 | 11 | 9 | 16 | 11 22 1 329 038 | 11 | 10 | 4 |
| 11 12 1 333 144 | 11 | 5 | 11 | 11 14 1 331 821 | 11 | 9 | 3 | 11 22 1 329 046 | 11 | 10 | 3 |
| 11 12 1 333 144 | 11 | 6 | 11 | 11 14 1 331 822 | 11 | 9 | 25 | 11 22 1 329 046 | 11 | 11 | 1 |
| 11 12 1 761 142 | 11 | 6 | 8 | 11 14 1 331 823 | 11 | 9 | 10 | 11 22 1 329 432 | 11 | 11 | 2 |
| 11 12 1 761 635 | 11 | 5 | 1 | 11 14 1 331 824 | 11 | 9 | 9 | 11 22 1 329 432 | 11 | 10 | 7 |
| 11 12 1 761 636 | 11 | 6 | 1 | 11 14 1 331 825 | 11 | 9 | 2 | 11 22 1 329 433 | 11 | 10 | 5 |
| 11 12 1 761 640 | 11 | 6 | 30 | 11 14 1 331 827 | 11 | 10 | 23 | 11 22 1 329 433 | 11 | 11 | 14 |
| 11 12 1 761 640 | 11 | 5 | 30 | 11 14 1 331 827 | 11 | 11 | 5 | 11 24 1 331 841 | 11 | 12 | 6 |
| 11 12 1 761 677 | 11 | 5 | 18 | 11 14 1 331 828 | 11 | 10 | 22 | 11 24 1 331 844 | 11 | 12 | 7 |
| 11 12 1 761 677 | 11 | 6 | 18 | 11 14 1 331 828 | 11 | 11 | 4 | 11 24 1 331 845 | 11 | 12 | 8 |
| 11 12 1 761 721 | 11 | 6 | 16 | 11 14 1 333 291 | 11 | 9 | 23 | 11 24 1 333 134 | 11 | 12 | 8 |
| 11 12 1 761 721 | 11 | 5 | 16 | 11 14 1 333 782 | 11 | 9 | 26 | 11 24 1 333 145 | 11 | 12 | 5 |
| 11 12 1 763 261 | 11 | 21 | 10 | 11 14 1 333 785 | 11 | 9 | 28 | 11 25 1 331 846 | 11 | 12 | 1 |
| 11 12 1 763 261 | 11 | 22 | 10 | 11 14 1 333 786 | 11 | 9 | 29 | 11 25 1 331 848 | 11 | 12 | 2 |
| 11 13 1 331 356 | 11 | 7 | 11 | 11 14 1 333 787 | 11 | 9 | 30 | 11 25 1 331 852 | 11 | 12 | 4 |
| 11 13 1 331 356 | 11 | 8 | 11 | 11 14 1 761 131 | 11 | 9 | 27 | 11 25 1 333 135 | 11 | 12 | 1 |
| 11 13 1 331 357 | 11 | 7 | 12 | 11 14 1 763 366 | 11 | 10 | 21 | 11 25 1 333 137 | 11 | 12 | 2 |

Teilenummern-Index
Part Number index
Index des numéros de pièces
Reservdelsnummer-Index
Indice dei numeri dei pezzi di ricambio



| Teile-Nummer | HG | S | Nr. | Teile-Nummer | HG | S | Nr. | Teile-Nummer | HG | S | Nr. |
|---|---|---|---|---|---|---|---|---|---|---|---|
| 11 27 1 331 856 | 11 | 15 | 5 | 11 32 1 329 611 | 13 | 9 | 30 | 11 34 1 333 018 | 11 | 6 | 15 |
| 11 27 1 331 856 | 11 | 10 | 20 | 11 32 1 329 880 | 13 | 9 | 30 | 11 34 1 333 018 | 11 | 5 | 15 |
| 11 27 1 331 859 | 11 | 10 | 15 | 11 32 1 329 881 | 13 | 9 | 30 | 11 34 1 333 019 | 11 | 6 | 12 |
| 11 27 1 331 859 | 11 | 15 | 11 | 11 32 1 329 882 | 13 | 9 | 30 | 11 34 1 333 019 | 11 | 5 | 12 |
| 11 27 1 331 862 | 11 | 10 | 19 | 11 32 1 331 885 | 11 | 17 | 13 | 11 34 1 333 020 | 11 | 5 | 13 |
| 11 27 1 331 862 | 11 | 15 | 7 | 11 32 1 331 885 | 11 | 16 | 13 | 11 34 1 333 020 | 11 | 6 | 13 |
| 11 27 1 331 863 | 11 | 15 | 10 | 11 32 1 331 889 | 11 | 17 | 16 | 11 34 1 333 021 | 11 | 5 | 14 |
| 11 27 1 331 864 | 11 | 15 | 6 | 11 32 1 331 889 | 11 | 16 | 16 | 11 34 1 333 021 | 11 | 6 | 14 |
| 11 27 1 331 864 | 11 | 10 | 16 | 11 32 1 331 890 | 11 | 16 | 18 | 11 41 1 304 178 | 11 | 20 | 6 |
| 11 27 1 331 865 | 11 | 15 | 1 | 11 32 1 331 890 | 11 | 17 | 18 | 11 41 1 331 562 | 11 | 19 | 16 |
| 11 27 1 331 866 | 11 | 10 | 14 | 11 32 1 331 891 | 11 | 17 | 17 | 11 41 1 333 033 | 11 | 8 | 25 |
| 11 27 1 331 867 | 11 | 10 | 12 | 11 32 1 331 891 | 11 | 16 | 17 | 11 41 1 333 034 | 11 | 7 | 25 |
| 11 27 1 331 867 | 11 | 15 | 3 | 11 32 1 331 892 | 11 | 17 | 14 | 11 41 1 333 130 | 11 | 18 | 5 |
| 11 27 1 331 868 | 11 | 15 | 4 | 11 32 1 331 892 | 11 | 16 | 14 | 11 41 1 335 529 | 11 | 20 | 17 |
| 11 27 1 331 868 | 11 | 10 | 13 | 11 32 1 761 667 | 11 | 16 | 13 | 11 41 1 763 360 | 11 | 18 | 1 |
| 11 27 1 331 869 | 11 | 15 | 13 | 11 32 1 761 667 | 11 | 17 | 13 | 11 42 1 333 036 | 11 | 8 | 14 |
| 11 27 1 331 869 | 11 | 10 | 8 | 11 32 1 763 378 | 11 | 8 | 24 | 11 42 1 333 036 | 11 | 7 | 14 |
| 11 27 1 331 870 | 11 | 10 | 2 | 11 32 1 763 378 | 11 | 7 | 24 | 11 42 1 333 143 | 11 | 7 | 14 |
| 11 27 1 331 870 | 11 | 11 | 12 | 11 32 1 763 378 | 11 | 17 | 15 | 11 42 1 333 143 | 11 | 8 | 14 |
| 11 27 1 331 872 | 11 | 14 | 14 | 11 32 1 763 378 | 11 | 16 | 15 | 11 42 1 761 087 | 11 | 20 | 10 |
| 11 27 1 331 872 | 11 | 13 | 14 | 11 33 1 331 557 | 11 | 17 | 4 | 11 42 1 761 087 | 11 | 8 | 27 |
| 11 27 1 331 873 | 13 | 8 | 15 | 11 33 1 331 557 | 11 | 16 | 4 | 11 42 1 761 087 | 11 | 19 | 23 |
| 11 27 1 331 873 | 11 | 13 | 5 | 11 33 1 331 893 | 11 | 17 | 1 | 11 42 1 761 087 | 11 | 7 | 27 |
| 11 27 1 331 873 | 11 | 14 | 5 | 11 33 1 331 893 | 11 | 16 | 1 | 11 43 1 333 041 | 11 | 7 | 17 |
| 11 27 1 331 874 | 11 | 14 | 16 | 11 33 1 331 896 | 11 | 17 | 2 | 11 43 1 333 041 | 11 | 8 | 17 |
| 11 27 1 331 874 | 11 | 13 | 16 | 11 33 1 331 896 | 11 | 16 | 2 | 11 43 1 333 046 | 11 | 8 | 16 |
| 11 27 1 331 875 | 11 | 13 | 17 | 11 33 1 331 898 | 11 | 16 | 3 | 11 43 1 333 046 | 11 | 7 | 16 |
| 11 27 1 331 875 | 11 | 14 | 17 | 11 33 1 331 898 | 11 | 17 | 3 | 11 43 1 333 054 | 11 | 8 | 18 |
| 11 27 1 763 483 | 11 | 13 | 15 | 11 33 1 333 000 | 11 | 17 | 5 | 11 43 1 333 054 | 11 | 7 | 18 |
| 11 27 1 763 483 | 11 | 14 | 15 | 11 33 1 333 000 | 11 | 16 | 5 | 11 43 1 333 397 | 11 | 7 | 19 |
| 11 31 1 331 880 | 11 | 14 | 11 | 11 34 1 333 016 | 11 | 5 | 9 | 11 43 1 333 398 | 11 | 8 | 19 |
| 11 31 1 331 881 | 11 | 13 | 11 | 11 34 1 333 016 | 11 | 6 | 9 | 11 43 1 763 368 | 11 | 8 | 29 |
| 11 31 1 331 882 | 11 | 14 | 13 | 11 34 1 333 017 | 11 | 5 | 10 | 11 43 1 763 368 | 11 | 7 | 29 |
| 11 31 1 331 882 | 11 | 13 | 13 | 11 34 1 333 017 | 11 | 6 | 10 | 11 44 1 333 358 | 11 | 19 | 3 |

Teilenummern-Index
Part Number index
Index des numéros de pièces
Reservdelsnummer-Index
Indice dei numeri dei pezzi di ricambio



| Teile-Nummer | HG | S | Nr. | Teile-Nummer | HG | S | Nr. | Teile-Nummer | HG | S | Nr. |
|---|---|---|---|---|---|---|---|---|---|---|---|
| 11 44 1 333 359 | 11 | 19 | 17 | 11 51 1 761 747 | 17 | 4 | 30 | 11 53 1 333 759 | 17 | 4 | 14 |
| 11 44 1 333 360 | 11 | 19 | 9 | 11 53 1 326 497 | 17 | 4 | 6 | 11 53 1 761 179 | 17 | 3 | 15 |
| 11 44 1 333 361 | 11 | 19 | 6 | 11 53 1 326 497 | 17 | 5 | 6 | 11 53 1 761 179 | 17 | 2 | 18 |
| 11 44 1 333 362 | 11 | 19 | 22 | 11 53 1 326 498 | 17 | 5 | 33 | 11 61 1 271 607 | 11 | 8 | 13 |
| 11 44 1 333 363 | 11 | 20 | 12 | 11 53 1 326 498 | 17 | 4 | 33 | 11 61 1 271 607 | 11 | 7 | 13 |
| 11 44 1 333 363 | 11 | 19 | 5 | 11 53 1 326 523 | 11 | 4 | 10 | 11 62 1 329 055 | 11 | 21 | 1 |
| 11 44 1 333 366 | 11 | 19 | 15 | 11 53 1 326 523 | 17 | 3 | 2 | 11 62 1 329 138 | 11 | 22 | 11 |
| 11 44 1 333 366 | 11 | 20 | 16 | 11 53 1 326 523 | 11 | 3 | 9 | 11 62 1 329 139 | 11 | 21 | 11 |
| 11 44 1 333 367 | 11 | 19 | 2 | 11 53 1 326 638 | 17 | 2 | 16 | 11 62 1 329 207 | 11 | 22 | 1 |
| 11 44 1 333 370 | 11 | 19 | 4 | 11 53 1 328 591 | 17 | 5 | 13 | 11 62 1 329 808 | 11 | 22 | 4 |
| 11 44 1 333 370 | 11 | 20 | 19 | 11 53 1 328 591 | 17 | 4 | 13 | 11 62 1 329 808 | 11 | 21 | 4 |
| 11 44 1 333 371 | 11 | 20 | 23 | 11 53 1 328 635 | 11 | 3 | 8 | 11 62 1 331 363 | 11 | 21 | 5 |
| 11 44 1 333 371 | 11 | 19 | 8 | 11 53 1 328 635 | 11 | 4 | 8 | 11 62 1 331 363 | 11 | 22 | 5 |
| 11 44 1 333 379 | 11 | 19 | 13 | 11 53 1 328 646 | 17 | 4 | 16 | 11 62 1 331 556 | 11 | 22 | 8 |
| 11 44 1 761 000 | 11 | 19 | 1 | 11 53 1 328 646 | 17 | 5 | 16 | 11 62 1 331 556 | 11 | 21 | 8 |
| 11 44 1 761 011 | 11 | 20 | 22 | 11 53 1 328 653 | 17 | 5 | 10 | 11 62 1 331 556 | 17 | 4 | 20 |
| 11 44 1 761 015 | 11 | 20 | 13 | 11 53 1 328 653 | 17 | 4 | 10 | 11 62 1 331 556 | 17 | 5 | 20 |
| 11 44 1 761 018 | 11 | 20 | 18 | 11 53 1 328 654 | 17 | 5 | 15 | 11 62 1 333 233 | 17 | 4 | 25 |
| 11 44 1 761 024 | 11 | 20 | 1 | 11 53 1 328 654 | 17 | 4 | 15 | 11 62 1 333 233 | 13 | 12 | 4 |
| 11 44 1 761 025 | 11 | 20 | 4 | 11 53 1 328 742 | 17 | 4 | 9 | 11 62 1 333 233 | 11 | 22 | 6 |
| 11 44 1 761 026 | 11 | 20 | 15 | 11 53 1 328 742 | 17 | 5 | 9 | 11 62 1 333 233 | 12 | 1 | 9 |
| 11 44 1 761 027 | 11 | 20 | 8 | 11 53 1 328 892 | 17 | 4 | 8 | 11 62 1 333 233 | 11 | 21 | 6 |
| 11 44 1 761 028 | 11 | 20 | 7 | 11 53 1 328 892 | 17 | 5 | 8 | 11 62 1 333 233 | 13 | 11 | 4 |
| 11 44 1 761 029 | 11 | 20 | 5 | 11 53 1 333 321 | 17 | 4 | 1 | 11 62 1 333 233 | 17 | 5 | 25 |
| 11 44 1 761 720 | 11 | 20 | 26 | 11 53 1 333 321 | 17 | 5 | 1 | 11 62 1 333 344 | 11 | 22 | 12 |
| 11 44 1 763 260 | 17 | 3 | 5 | 11 53 1 333 323 | 17 | 5 | 2 | 11 62 1 333 344 | 11 | 21 | 12 |
| 11 44 1 763 260 | 11 | 20 | 20 | 11 53 1 333 323 | 17 | 4 | 2 | 11 62 1 333 345 | 11 | 21 | 13 |
| 11 51 1 333 330 | 17 | 4 | 26 | 11 53 1 333 335 | 17 | 3 | 16 | 11 62 1 333 345 | 11 | 22 | 13 |
| 11 51 1 333 330 | 17 | 5 | 26 | 11 53 1 333 338 | 17 | 5 | 12 | 11 81 1 329 348 | 21 | 1 | 10 |
| 11 51 1 333 331 | 17 | 5 | 27 | 11 53 1 333 338 | 17 | 4 | 12 | 11 81 1 329 394 | 21 | 1 | 4 |
| 11 51 1 333 331 | 17 | 4 | 27 | 11 53 1 333 339 | 17 | 5 | 11 | 11 81 1 329 410 | 21 | 1 | 3 |
| 11 51 1 333 394 | 17 | 5 | 30 | 11 53 1 333 339 | 17 | 4 | 11 | 11 81 1 329 413 | 11 | 23 | 5 |
| 11 51 1 333 394 | 17 | 4 | 30 | 11 53 1 333 343 | 17 | 3 | 14 | 11 81 1 331 372 | 11 | 23 | 11 |
| 11 51 1 761 747 | 17 | 5 | 30 | 11 53 1 333 759 | 17 | 5 | 14 | 11 81 1 331 375 | 11 | 23 | 8 |

Teilenummern-Index
Part Number index
Index des numéros de pièces
Reservdelsnummer-Index
Indice dei numeri dei pezzi di ricambio



| Teile-Nummer | HG | S | Nr. | Teile-Nummer | HG | S | Nr. | Teile-Nummer | HG | S | Nr. |
|---|---|---|---|---|---|---|---|---|---|---|---|
| 11 81 1 333 276 | 11 | 23 | 6 | 12 31 1 333 937 | 12 | 3 | 2 | 12 51 1 333 913 | 62 | 3 | 24 |
| 11 81 1 333 279 | 11 | 23 | 1 | 12 31 1 333 938 | 12 | 3 | 7 | 12 51 1 333 913 | 62 | 2 | 23 |
| 11 81 1 333 669 | 21 | 1 | 4 | 12 31 1 333 939 | 12 | 3 | 8 | 12 51 1 333 915 | 12 | 6 | 1 |
| 11 81 1 333 728 | 11 | 23 | 9 | 12 31 1 334 010 | 12 | 3 | 3 | 12 52 1 329 943 | 12 | 5 | 3 |
| 11 81 1 333 744 | 11 | 23 | 10 | 12 31 1 334 011 | 12 | 3 | 4 | 12 52 1 329 968 | 12 | 5 | 2 |
| 11 81 1 761 348 | 21 | 1 | 4 | 12 31 1 334 012 | 12 | 3 | 5 | 12 52 1 333 917 | 12 | 6 | 2 |
| 12 14 1 333 921 | 11 | 9 | 36 | 12 31 1 334 013 | 12 | 3 | 6 | 12 61 1 331 930 | 12 | 5 | 12 |
| 12 31 1 328 424 | 12 | 2 | 1 | 12 31 1 361 611 | 12 | 1 | 23 | 12 62 1 331 929 | 12 | 6 | 11 |
| 12 31 1 328 425 | 12 | 2 | 4 | 12 32 1 326 690 | 12 | 2 | 11 | 12 62 1 331 929 | 12 | 5 | 13 |
| 12 31 1 328 426 | 12 | 2 | 16 | 12 41 1 329 906 | 12 | 4 | 1 | 12 62 1 334 016 | 12 | 6 | 10 |
| 12 31 1 328 427 | 12 | 2 | 19 | 12 41 1 331 494 | 12 | 4 | 2 | 13 11 0 642 194 | 13 | 2 | 11 |
| 12 31 1 328 428 | 12 | 2 | 17 | 12 41 1 331 495 | 12 | 4 | 6 | 13 21 0 743 138 | 13 | 2 | 10 |
| 12 31 1 329 265 | 12 | 1 | 13 | 12 41 1 331 496 | 12 | 4 | 7 | 13 21 1 256 320 | 13 | 1 | 17 |
| 12 31 1 329 266 | 12 | 1 | 20 | 12 41 1 331 497 | 12 | 4 | 10 | 13 21 1 326 421 | 13 | 2 | 8 |
| 12 31 1 329 282 | 12 | 1 | 8 | 12 41 1 331 498 | 12 | 4 | 14 | 13 21 1 326 574 | 27 | 1 | 12 |
| 12 31 1 329 282 | 11 | 7 | 32 | 12 41 1 331 499 | 12 | 4 | 33 | 13 21 1 326 574 | 13 | 2 | 18 |
| 12 31 1 329 282 | 11 | 8 | 32 | 12 41 1 331 500 | 12 | 4 | 13 | 13 21 1 326 574 | 13 | 1 | 28 |
| 12 31 1 329 935 | 12 | 1 | 25 | 12 41 1 331 501 | 12 | 4 | 29 | 13 21 1 326 574 | 27 | 4 | 7 |
| 12 31 1 329 997 | 12 | 1 | 1 | 12 41 1 331 503 | 12 | 4 | 22 | 13 21 1 326 574 | 27 | 8 | 12 |
| 12 31 1 330 089 | 12 | 2 | 6 | 12 41 1 331 504 | 12 | 4 | 23 | 13 21 1 328 524 | 13 | 1 | 11 |
| 12 31 1 330 090 | 12 | 2 | 7 | 12 41 1 331 505 | 12 | 4 | 26 | 13 21 1 329 149 | 13 | 1 | 18 |
| 12 31 1 330 091 | 12 | 2 | 8 | 12 41 1 331 506 | 12 | 4 | 25 | 13 21 1 329 184 | 13 | 1 | 23 |
| 12 31 1 330 092 | 12 | 2 | 9 | 12 41 1 331 508 | 12 | 4 | 31 | 13 21 1 329 185 | 13 | 1 | 22 |
| 12 31 1 330 093 | 12 | 2 | 10 | 12 41 1 331 509 | 12 | 4 | 16 | 13 21 1 329 186 | 13 | 1 | 30 |
| 12 31 1 330 094 | 12 | 2 | 12 | 12 41 1 331 510 | 12 | 4 | 24 | 13 21 1 329 186 | 13 | 1 | 25 |
| 12 31 1 330 095 | 12 | 2 | 14 | 12 41 1 331 511 | 12 | 4 | 8 | 13 21 1 329 198 | 13 | 1 | 8 |
| 12 31 1 330 097 | 12 | 2 | 5 | 12 41 1 331 512 | 12 | 4 | 5 | 13 21 1 329 200 | 13 | 1 | 15 |
| 12 31 1 330 098 | 12 | 2 | 15 | 12 41 1 331 513 | 12 | 4 | 15 | 13 21 1 329 726 | 12 | 1 | 31 |
| 12 31 1 330 099 | 12 | 2 | 18 | 12 41 1 331 514 | 12 | 4 | 9 | 13 21 1 329 726 | 13 | 1 | 16 |
| 12 31 1 330 130 | 12 | 2 | 3 | 12 41 1 331 515 | 12 | 4 | 3 | 13 21 1 330 287 | 27 | 8 | 9 |
| 12 31 1 331 436 | 12 | 1 | 24 | 12 41 1 331 516 | 12 | 4 | 4 | 13 21 1 330 287 | 27 | 4 | 8 |
| 12 31 1 333 332 | 12 | 1 | 28 | 12 41 1 331 517 | 12 | 4 | 30 | 13 21 1 330 287 | 13 | 2 | 6 |
| 12 31 1 333 788 | 12 | 1 | 16 | 12 41 1 354 571 | 12 | 4 | 21 | 13 21 1 330 287 | 27 | 1 | 11 |
| 12 31 1 333 935 | 12 | 3 | 1 | 12 51 1 329 998 | 12 | 5 | 1 | 13 21 1 331 336 | 13 | 1 | 4 |

Teilenummern-Index
Part Number index
Index des numéros de pièces
Reservdelsnummer-Index
Indice dei numeri dei pezzi di ricambio



| Teile-Nummer | HG | S | Nr. | Teile-Nummer | HG | S | Nr. | Teile-Nummer | HG | S | Nr. |
|---|---|---|---|---|---|---|---|---|---|---|---|
| 13 21 1 331 338 | 13 | 1 | 13 | 13 31 1 331 588 | 13 | 7 | 5 | 13 41 1 333 065 | 13 | 9 | 23 |
| 13 21 1 331 346 | 13 | 1 | 29 | 13 31 1 331 589 | 13 | 5 | 9 | 13 41 1 333 066 | 13 | 9 | 29 |
| 13 21 1 331 462 | 13 | 1 | 10 | 13 31 1 331 589 | 13 | 4 | 9 | 13 41 1 333 067 | 13 | 9 | 14 |
| 13 21 1 331 463 | 13 | 1 | 26 | 13 31 1 333 013 | 13 | 3 | 1 | 13 41 1 333 068 | 13 | 9 | 13 |
| 13 21 1 331 464 | 13 | 1 | 1 | 13 31 1 333 055 | 13 | 5 | 12 | 13 41 1 333 069 | 13 | 9 | 16 |
| 13 21 1 331 465 | 13 | 1 | 19 | 13 31 1 333 055 | 13 | 6 | 14 | 13 41 1 333 070 | 12 | 1 | 30 |
| 13 21 1 331 467 | 13 | 1 | 9 | 13 31 1 333 055 | 13 | 7 | 14 | 13 41 1 333 071 | 13 | 9 | 9 |
| 13 21 1 331 467 | 13 | 2 | 7 | 13 31 1 333 056 | 13 | 7 | 13 | 13 41 1 333 072 | 13 | 9 | 12 |
| 13 21 1 333 265 | 13 | 2 | 3 | 13 31 1 333 056 | 13 | 6 | 13 | 13 41 1 333 073 | 13 | 9 | 18 |
| 13 21 1 333 265 | 27 | 8 | 4 | 13 31 1 333 057 | 13 | 4 | 14 | 13 41 1 333 076 | 11 | 14 | 1 |
| 13 21 1 333 625 | 13 | 1 | 32 | 13 31 1 333 057 | 13 | 7 | 8 | 13 41 1 333 077 | 11 | 13 | 1 |
| 13 21 1 333 626 | 13 | 1 | 31 | 13 31 1 333 057 | 13 | 6 | 8 | 13 41 1 333 082 | 13 | 8 | 28 |
| 13 21 1 333 649 | 13 | 2 | 14 | 13 31 1 333 057 | 13 | 5 | 15 | 13 41 1 333 084 | 13 | 8 | 25 |
| 13 21 1 333 652 | 13 | 2 | 4 | 13 31 1 333 058 | 13 | 5 | 14 | 13 41 1 333 085 | 13 | 8 | 16 |
| 13 21 1 333 653 | 13 | 2 | 1 | 13 31 1 333 058 | 13 | 7 | 9 | 13 41 1 333 086 | 13 | 8 | 18 |
| 13 21 1 333 654 | 13 | 2 | 15 | 13 31 1 333 058 | 13 | 6 | 9 | 13 41 1 333 087 | 13 | 8 | 22 |
| 13 21 1 333 662 | 13 | 2 | 13 | 13 31 1 333 058 | 13 | 4 | 13 | 13 41 1 333 088 | 13 | 8 | 19 |
| 13 31 0 075 779 | 13 | 3 | 2 | 13 31 1 333 310 | 13 | 4 | 1 | 13 41 1 333 089 | 13 | 8 | 23 |
| 13 31 1 329 256 | 13 | 3 | 9 | 13 31 1 333 311 | 13 | 4 | 8 | 13 41 1 333 090 | 13 | 8 | 24 |
| 13 31 1 329 258 | 13 | 5 | 7 | 13 31 1 333 312 | 13 | 5 | 1 | 13 41 1 333 091 | 13 | 8 | 27 |
| 13 31 1 329 258 | 13 | 4 | 7 | 13 31 1 333 313 | 13 | 5 | 8 | 13 41 1 333 092 | 13 | 8 | 1 |
| 13 31 1 330 072 | 13 | 3 | 6 | 13 31 1 333 387 | 13 | 7 | 12 | 13 41 1 333 093 | 13 | 8 | 10 |
| 13 31 1 330 073 | 13 | 3 | 7 | 13 31 1 333 600 | 13 | 5 | 2 | 13 41 1 333 094 | 13 | 8 | 11 |
| 13 31 1 330 074 | 13 | 3 | 8 | 13 31 1 333 600 | 13 | 4 | 2 | 13 41 1 333 095 | 13 | 8 | 12 |
| 13 31 1 330 075 | 13 | 3 | 4 | 13 31 1 333 601 | 13 | 5 | 4 | 13 41 1 333 096 | 13 | 8 | 14 |
| 13 31 1 330 076 | 13 | 3 | 5 | 13 31 1 333 601 | 13 | 4 | 4 | 13 41 1 333 097 | 13 | 8 | 13 |
| 13 31 1 331 042 | 13 | 3 | 11 | 13 32 1 329 270 | 13 | 7 | 2 | 13 41 1 333 098 | 13 | 8 | 9 |
| 13 31 1 331 519 | 13 | 3 | 3 | 13 32 1 329 270 | 13 | 6 | 2 | 13 41 1 333 099 | 13 | 8 | 7 |
| 13 31 1 331 562 | 13 | 3 | 12 | 13 32 1 329 272 | 13 | 6 | 1 | 13 41 1 333 100 | 13 | 8 | 6 |
| 13 31 1 331 575 | 13 | 7 | 10 | 13 32 1 329 272 | 13 | 7 | 1 | 13 41 1 333 101 | 13 | 8 | 5 |
| 13 31 1 331 576 | 13 | 7 | 15 | 13 41 1 329 369 | 13 | 9 | 20 | 13 41 1 333 102 | 13 | 9 | 33 |
| 13 31 1 331 577 | 13 | 6 | 10 | 13 41 1 333 062 | 13 | 9 | 17 | 13 41 1 333 103 | 13 | 9 | 5 |
| 13 31 1 331 578 | 13 | 6 | 15 | 13 41 1 333 063 | 13 | 9 | 27 | 13 41 1 333 104 | 13 | 9 | 3 |
| 13 31 1 331 588 | 13 | 6 | 5 | 13 41 1 333 064 | 13 | 9 | 28 | 13 41 1 333 105 | 13 | 9 | 4 |

Teilenummern-Index
Part Number index
Index des numéros de pièces
Reservdelsnummer-Index
Indice dei numeri dei pezzi di ricambio



| Teile-Nummer | HG | S | Nr. | Teile-Nummer | HG | S | Nr. | Teile-Nummer | HG | S | Nr. |
|---|---|---|---|---|---|---|---|---|---|---|---|
| 13 41 1 333 106 | 13 | 9 | 8 | 13 72 1 331 443 | 13 | 12 | 7 | 17 11 1 763 099 | 17 | 3 | 21 |
| 13 41 1 333 107 | 13 | 9 | 6 | 13 72 1 763 453 | 13 | 11 | 7 | 17 11 1 763 100 | 17 | 3 | 19 |
| 13 41 1 333 108 | 13 | 9 | 7 | 13 72 1 763 454 | 13 | 12 | 6 | 17 11 1 763 345 | 11 | 6 | 2 |
| 13 41 1 333 254 | 13 | 9 | 10 | 17 11 1 329 064 | 17 | 1 | 20 | 17 11 1 763 345 | 11 | 21 | 19 |
| 13 41 1 333 655 | 13 | 9 | 27 | 17 11 1 329 157 | 17 | 1 | 12 | 17 11 1 763 345 | 11 | 22 | 19 |
| 13 41 1 333 779 | 11 | 9 | 33 | 17 11 1 329 166 | 17 | 1 | 2 | 17 11 1 763 345 | 11 | 5 | 2 |
| 13 41 1 333 783 | 11 | 9 | 34 | 17 11 1 329 168 | 17 | 1 | 8 | 17 11 1 763 345 | 11 | 3 | 6 |
| 13 41 1 761 138 | 11 | 9 | 35 | 17 11 1 329 169 | 17 | 1 | 10 | 17 11 1 763 345 | 11 | 4 | 6 |
| 13 41 1 763 351 | 13 | 9 | 5 | 17 11 1 329 170 | 17 | 1 | 11 | 17 12 1 119 294 | 17 | 5 | 34 |
| 13 41 1 763 352 | 13 | 9 | 33 | 17 11 1 329 171 | 17 | 1 | 9 | 17 12 1 119 294 | 17 | 4 | 34 |
| 13 51 1 329 372 | 13 | 10 | 3 | 17 11 1 329 197 | 11 | 21 | 18 | 17 12 1 329 240 | 17 | 2 | 7 |
| 13 51 1 329 435 | 13 | 10 | 2 | 17 11 1 329 197 | 11 | 5 | 3 | 17 12 1 329 242 | 17 | 2 | 10 |
| 13 51 1 329 436 | 13 | 10 | 2 | 17 11 1 329 197 | 11 | 3 | 5 | 17 12 1 331 448 | 11 | 3 | 12 |
| 13 51 1 329 437 | 13 | 10 | 2 | 17 11 1 329 197 | 11 | 6 | 3 | 17 12 1 331 449 | 11 | 22 | 2 |
| 13 51 1 329 438 | 13 | 10 | 2 | 17 11 1 329 197 | 11 | 22 | 18 | 17 12 1 331 449 | 11 | 21 | 2 |
| 13 51 1 333 109 | 13 | 10 | 1 | 17 11 1 329 197 | 11 | 4 | 5 | 17 12 1 331 567 | 17 | 2 | 9 |
| 13 51 1 333 123 | 11 | 2 | 4 | 17 11 1 329 391 | 17 | 2 | 11 | 17 12 1 331 568 | 17 | 2 | 8 |
| 13 51 1 333 123 | 11 | 1 | 4 | 17 11 1 331 422 | 17 | 1 | 15 | 17 12 1 333 340 | 17 | 3 | 8 |
| 13 51 1 761 132 | 11 | 9 | 31 | 17 11 1 331 424 | 17 | 1 | 5 | 17 12 1 333 608 | 17 | 3 | 11 |
| 13 51 1 763 470 | 11 | 1 | 5 | 17 11 1 331 426 | 17 | 1 | 3 | 17 12 1 333 609 | 17 | 3 | 9 |
| 13 51 1 763 470 | 11 | 2 | 5 | 17 11 1 331 427 | 17 | 1 | 4 | 17 12 1 333 610 | 17 | 3 | 10 |
| 13 53 1 331 561 | 13 | 10 | 9 | 17 11 1 331 430 | 17 | 1 | 13 | 17 12 1 333 611 | 17 | 3 | 10 |
| 13 53 1 331 563 | 13 | 10 | 8 | 17 11 1 331 435 | 17 | 1 | 14 | 17 12 1 333 615 | 17 | 3 | 12 |
| 13 53 1 333 124 | 13 | 10 | 7 | 17 11 1 331 444 | 17 | 1 | 16 | 17 12 1 333 752 | 17 | 3 | 4 |
| 13 53 1 333 127 | 13 | 10 | 6 | 17 11 1 331 469 | 17 | 2 | 13 | 17 12 1 333 753 | 17 | 3 | 7 |
| 13 53 1 333 128 | 13 | 6 | 11 | 17 11 1 333 337 | 17 | 1 | 22 | 17 12 1 333 754 | 17 | 3 | 3 |
| 13 53 1 333 128 | 13 | 7 | 11 | 17 11 1 333 605 | 17 | 1 | 6 | 17 12 1 333 755 | 17 | 3 | 1 |
| 13 72 1 257 060 | 13 | 12 | 3 | 17 11 1 333 640 | 17 | 1 | 1 | 17 12 1 333 756 | 17 | 3 | 1 |
| 13 72 1 329 293 | 13 | 11 | 2 | 17 11 1 333 641 | 17 | 1 | 7 | 17 12 1 333 839 | 17 | 2 | 17 |
| 13 72 1 329 294 | 13 | 11 | 3 | 17 11 1 333 794 | 11 | 20 | 28 | 17 12 1 763 101 | 11 | 4 | 12 |
| 13 72 1 329 296 | 13 | 12 | 2 | 17 11 1 761 129 | 17 | 2 | 12 | 17 21 1 329 340 | 17 | 2 | 1 |
| 13 72 1 331 097 | 13 | 11 | 1 | 17 11 1 761 670 | 17 | 1 | 21 | 17 21 1 329 341 | 17 | 2 | 1 |
| 13 72 1 331 098 | 13 | 12 | 1 | 17 11 1 761 671 | 17 | 1 | 23 | 17 21 1 331 413 | 17 | 2 | 2 |
| 13 72 1 331 443 | 13 | 11 | 6 | 17 11 1 763 098 | 17 | 3 | 22 | 17 21 1 331 418 | 17 | 2 | 3 |

Teilenummern-Index
Part Number index
Index des numéros de pièces
Reservdelsnummer-Index
Indice dei numeri dei pezzi di ricambio

**00**
**22**
2/85
D 35/D 50

| Teile-Nummer | HG | S | Nr. | Teile-Nummer | HG | S | Nr. | Teile-Nummer | HG | S | Nr. |
|---|---|---|---|---|---|---|---|---|---|---|---|
| 17 21 1 331 518 | 17 | 2 | 4 | 27 62 1 328 385 | 27 | 11 | 19 | 27 63 1 331 295 | 27 | 5 | 16 |
| 21 21 1 329 049 | 21 | 1 | 1 | 27 62 1 328 389 | 27 | 10 | 5 | 27 63 1 331 295 | 27 | 9 | 16 |
| 21 21 1 331 419 | 21 | 1 | 1 | 27 62 1 328 389 | 27 | 6 | 23 | 27 63 1 331 297 | 27 | 10 | 3 |
| 21 21 1 761 059 | 21 | 1 | 1 | 27 62 1 328 390 | 27 | 6 | 22 | 27 63 1 331 298 | 27 | 10 | 8 |
| 27 62 1 328 147 | 27 | 11 | 20 | 27 62 1 328 390 | 27 | 10 | 4 | 27 63 1 331 299 | 27 | 9 | 4 |
| 27 62 1 328 147 | 27 | 6 | 28 | 27 62 1 328 408 | 27 | 7 | 17 | 27 63 1 331 300 | 27 | 10 | 10 |
| 27 62 1 328 149 | 27 | 6 | 27 | 27 62 1 328 409 | 27 | 7 | 18 | 27 63 1 331 300 | 27 | 11 | 20 |
| 27 62 1 328 149 | 27 | 11 | 20 | 27 62 1 330 208 | 27 | 11 | 15 | 27 63 1 331 301 | 27 | 11 | 20 |
| 27 62 1 328 150 | 27 | 11 | 20 | 27 63 1 328 387 | 27 | 11 | 6 | 27 63 1 331 301 | 27 | 10 | 10 |
| 27 62 1 328 150 | 27 | 6 | 25 | 27 63 1 331 262 | 27 | 9 | 25 | 27 63 1 331 302 | 27 | 10 | 10 |
| 27 62 1 328 151 | 27 | 6 | 26 | 27 63 1 331 262 | 27 | 5 | 17 | 27 63 1 331 303 | 27 | 11 | 20 |
| 27 62 1 328 151 | 27 | 11 | 20 | 27 63 1 331 264 | 27 | 9 | 9 | 27 63 1 331 303 | 27 | 10 | 10 |
| 27 62 1 328 152 | 27 | 7 | 8 | 27 63 1 331 264 | 27 | 5 | 6 | 27 63 1 331 304 | 27 | 10 | 10 |
| 27 62 1 328 153 | 27 | 7 | 7 | 27 63 1 331 265 | 27 | 5 | 9 | 27 63 1 331 304 | 27 | 11 | 20 |
| 27 62 1 328 154 | 27 | 7 | 6 | 27 63 1 331 265 | 27 | 9 | 11 | 27 63 1 331 305 | 27 | 10 | 10 |
| 27 62 1 328 162 | 27 | 6 | 12 | 27 63 1 331 266 | 27 | 9 | 13 | 27 63 1 331 306 | 27 | 9 | 2 |
| 27 62 1 328 162 | 27 | 11 | 15 | 27 63 1 331 266 | 27 | 5 | 11 | 27 63 1 331 307 | 27 | 11 | 23 |
| 27 62 1 328 173 | 27 | 11 | 18 | 27 63 1 331 270 | 27 | 9 | 10 | 27 63 1 331 307 | 27 | 10 | 6 |
| 27 62 1 328 174 | 27 | 11 | 9 | 27 63 1 331 270 | 27 | 5 | 8 | 27 63 1 331 308 | 27 | 10 | 1 |
| 27 62 1 328 174 | 27 | 6 | 18 | 27 63 1 331 271 | 27 | 5 | 25 | 27 63 1 331 309 | 27 | 11 | 18 |
| 27 62 1 328 175 | 27 | 11 | 9 | 27 63 1 331 271 | 27 | 9 | 14 | 27 63 1 331 310 | 27 | 11 | 19 |
| 27 62 1 328 175 | 27 | 6 | 8 | 27 63 1 331 273 | 27 | 9 | 18 | 27 63 1 331 311 | 27 | 11 | 5 |
| 27 62 1 328 176 | 27 | 6 | 7 | 27 63 1 331 274 | 27 | 9 | 23 | 27 63 1 331 312 | 27 | 11 | 3 |
| 27 62 1 328 176 | 27 | 11 | 9 | 27 63 1 331 275 | 27 | 9 | 1 | 27 63 1 331 313 | 27 | 11 | 7 |
| 27 62 1 328 177 | 27 | 11 | 9 | 27 63 1 331 281 | 27 | 9 | 21 | 27 63 1 331 314 | 27 | 11 | 8 |
| 27 62 1 328 177 | 27 | 6 | 17 | 27 63 1 331 282 | 27 | 9 | 22 | 27 63 1 331 315 | 27 | 11 | 2 |
| 27 62 1 328 179 | 27 | 11 | 8 | 27 63 1 331 283 | 27 | 9 | 20 | 27 63 1 331 316 | 27 | 11 | 9 |
| 27 62 1 328 202 | 27 | 11 | 14 | 27 63 1 331 284 | 27 | 9 | 24 | 27 63 1 331 317 | 27 | 11 | 9 |
| 27 62 1 328 202 | 27 | 6 | 11 | 27 63 1 331 288 | 27 | 11 | 11 | 27 63 1 331 318 | 27 | 11 | 9 |
| 27 62 1 328 203 | 27 | 11 | 16 | 27 63 1 331 289 | 27 | 11 | 13 | 27 63 1 331 319 | 27 | 11 | 9 |
| 27 62 1 328 203 | 27 | 6 | 19 | 27 63 1 331 290 | 27 | 11 | 17 | 27 63 1 331 321 | 27 | 11 | 4 |
| 27 62 1 328 204 | 27 | 6 | 9 | 27 63 1 331 291 | 27 | 11 | 14 | 27 63 1 331 324 | 27 | 10 | 7 |
| 27 62 1 328 204 | 27 | 11 | 10 | 27 63 1 331 292 | 27 | 11 | 16 | 27 63 1 331 325 | 27 | 11 | 6 |
| 27 62 1 328 206 | 27 | 11 | 11 | 27 63 1 331 294 | 27 | 10 | 11 | 27 63 1 331 326 | 27 | 11 | 1 |

Teilenummern-Index
Part Number index
Index des numéros de pièces
Reservdelsnummer-Index
Indice dei numeri dei pezzi di ricambio



| Teile-Nummer | HG | S | Nr. | Teile-Nummer | HG | S | Nr. | Teile-Nummer | HG | S | Nr. |
|---|---|---|---|---|---|---|---|---|---|---|---|
| 27 63 1 331 327 | 27 | 10 | 4 | 27 63 1 333 177 | 27 | 2 | 45 | 27 63 1 333 197 | 27 | 3 | 13 |
| 27 63 1 331 327 | 27 | 11 | 21 | 27 63 1 333 178 | 27 | 2 | 44 | 27 63 1 333 198 | 27 | 3 | 13 |
| 27 63 1 331 328 | 27 | 10 | 5 | 27 63 1 333 179 | 27 | 2 | 43 | 27 63 1 333 198 | 27 | 2 | 54 |
| 27 63 1 331 328 | 27 | 11 | 22 | 27 63 1 333 180 | 27 | 3 | 21 | 27 63 1 333 199 | 27 | 3 | 13 |
| 27 63 1 331 421 | 27 | 1 | 1 | 27 63 1 333 181 | 27 | 3 | 20 | 27 63 1 333 199 | 27 | 2 | 54 |
| 27 63 1 331 423 | 27 | 1 | 1 | 27 63 1 333 182 | 27 | 3 | 8 | 27 63 1 333 200 | 27 | 3 | 13 |
| 27 63 1 331 451 | 27 | 9 | 3 | 27 63 1 333 182 | 27 | 3 | 19 | 27 63 1 333 200 | 27 | 2 | 54 |
| 27 63 1 333 152 | 27 | 3 | 1 | 27 63 1 333 183 | 27 | 3 | 17 | 27 63 1 333 201 | 27 | 3 | 13 |
| 27 63 1 333 153 | 27 | 2 | 28 | 27 63 1 333 183 | 27 | 2 | 49 | 27 63 1 333 201 | 27 | 2 | 54 |
| 27 63 1 333 154 | 27 | 2 | 23 | 27 63 1 333 184 | 27 | 3 | 7 | 27 63 1 333 202 | 27 | 2 | 54 |
| 27 63 1 333 155 | 27 | 2 | 24 | 27 63 1 333 185 | 27 | 3 | 9 | 27 63 1 333 202 | 27 | 3 | 13 |
| 27 63 1 333 156 | 27 | 2 | 21 | 27 63 1 333 185 | 27 | 2 | 50 | 27 63 1 333 203 | 27 | 3 | 13 |
| 27 63 1 333 157 | 27 | 2 | 17 | 27 63 1 333 186 | 27 | 2 | 51 | 27 63 1 333 203 | 27 | 2 | 54 |
| 27 63 1 333 158 | 27 | 2 | 20 | 27 63 1 333 186 | 27 | 3 | 10 | 27 63 1 333 204 | 27 | 3 | 15 |
| 27 63 1 333 159 | 27 | 2 | 15 | 27 63 1 333 187 | 27 | 2 | 51 | 27 63 1 333 204 | 27 | 2 | 55 |
| 27 63 1 333 160 | 27 | 2 | 16 | 27 63 1 333 187 | 27 | 3 | 10 | 27 63 1 333 205 | 27 | 3 | 14 |
| 27 63 1 333 161 | 27 | 2 | 19 | 27 63 1 333 188 | 27 | 2 | 52 | 27 63 1 333 205 | 27 | 2 | 56 |
| 27 63 1 333 162 | 27 | 2 | 18 | 27 63 1 333 189 | 27 | 3 | 12 | 27 63 1 333 206 | 27 | 2 | 2 |
| 27 63 1 333 163 | 27 | 2 | 14 | 27 63 1 333 189 | 27 | 2 | 53 | 27 63 1 333 207 | 27 | 2 | 1 |
| 27 63 1 333 164 | 27 | 2 | 22 | 27 63 1 333 190 | 27 | 3 | 3 | 27 63 1 333 208 | 27 | 2 | 3 |
| 27 63 1 333 165 | 27 | 2 | 32 | 27 63 1 333 190 | 27 | 2 | 54 | 27 63 1 333 209 | 27 | 2 | 4 |
| 27 63 1 333 165 | 27 | 3 | 6 | 27 63 1 333 191 | 27 | 2 | 54 | 27 63 1 333 210 | 27 | 2 | 5 |
| 27 63 1 333 165 | 27 | 2 | 29 | 27 63 1 333 191 | 27 | 3 | 13 | 27 63 1 333 211 | 27 | 2 | 7 |
| 27 63 1 333 166 | 27 | 3 | 5 | 27 63 1 333 192 | 27 | 3 | 13 | 27 63 1 333 212 | 27 | 2 | 11 |
| 27 63 1 333 167 | 27 | 3 | 4 | 27 63 1 333 192 | 27 | 2 | 54 | 27 63 1 333 213 | 27 | 2 | 8 |
| 27 63 1 333 168 | 27 | 3 | 4 | 27 63 1 333 193 | 27 | 3 | 13 | 27 63 1 333 214 | 27 | 2 | 8 |
| 27 63 1 333 169 | 27 | 3 | 4 | 27 63 1 333 193 | 27 | 2 | 54 | 27 63 1 333 215 | 27 | 2 | 9 |
| 27 63 1 333 170 | 27 | 3 | 4 | 27 63 1 333 194 | 27 | 2 | 54 | 27 63 1 333 216 | 27 | 2 | 10 |
| 27 63 1 333 171 | 27 | 3 | 4 | 27 63 1 333 194 | 27 | 3 | 13 | 27 63 1 333 217 | 27 | 2 | 42 |
| 27 63 1 333 172 | 27 | 3 | 4 | 27 63 1 333 195 | 27 | 2 | 54 | 27 63 1 333 218 | 27 | 2 | 40 |
| 27 63 1 333 173 | 27 | 3 | 4 | 27 63 1 333 195 | 27 | 3 | 13 | 27 63 1 333 219 | 27 | 2 | 25 |
| 27 63 1 333 174 | 27 | 3 | 4 | 27 63 1 333 196 | 27 | 2 | 54 | 27 63 1 333 220 | 27 | 2 | 48 |
| 27 63 1 333 175 | 27 | 3 | 4 | 27 63 1 333 196 | 27 | 3 | 13 | 27 63 1 333 220 | 27 | 3 | 16 |
| 27 63 1 333 176 | 27 | 3 | 24 | 27 63 1 333 197 | 27 | 2 | 54 | 27 63 1 333 221 | 27 | 2 | 31 |

Teilenummern-Index
Part Number index
Index des numéros de pièces
Reservdelsnummer-Index
Indice dei numeri dei pezzi di ricambio

**00**
**24**
2/85
D 35/D 50

| Teile-Nummer | HG | S | Nr. | Teile-Nummer | HG | S | Nr. | Teile-Nummer | HG | S | Nr. |
|---|---|---|---|---|---|---|---|---|---|---|---|
| 27 63 1 333 222 | 27 | 2 | 30 | 27 63 1 761 428 | 27 | 9 | 15 | 27 63 1 761 469 | 27 | 7 | 13 |
| 27 63 1 333 223 | 27 | 2 | 27 | 27 63 1 761 447 | 27 | 10 | 9 | 27 63 1 761 470 | 27 | 10 | 1 |
| 27 63 1 333 224 | 27 | 3 | 23 | 27 63 1 761 448 | 27 | 10 | 9 | 27 63 1 761 471 | 27 | 6 | 15 |
| 27 63 1 333 225 | 27 | 3 | 2 | 27 63 1 761 449 | 27 | 11 | 24 | 27 63 1 761 471 | 27 | 11 | 5 |
| 27 63 1 333 227 | 27 | 3 | 18 | 27 63 1 761 450 | 27 | 11 | 24 | 27 63 1 761 472 | 27 | 6 | 3 |
| 27 63 1 333 228 | 27 | 3 | 11 | 27 63 1 761 451 | 27 | 5 | 23 | 27 63 1 761 472 | 27 | 11 | 3 |
| 27 63 1 333 230 | 27 | 3 | 18 | 27 63 1 761 451 | 27 | 9 | 23 | 27 63 1 761 473 | 27 | 6 | 16 |
| 27 63 1 333 231 | 27 | 3 | 11 | 27 63 1 761 452 | 27 | 9 | 1 | 27 63 1 761 473 | 27 | 11 | 7 |
| 27 63 1 333 232 | 27 | 2 | 35 | 27 63 1 761 453 | 27 | 9 | 15 | 27 63 1 761 474 | 27 | 11 | 8 |
| 27 63 1 333 354 | 27 | 2 | 13 | 27 63 1 761 453 | 27 | 5 | 12 | 27 63 1 761 474 | 27 | 6 | 6 |
| 27 63 1 333 368 | 27 | 1 | 7 | 27 63 1 761 454 | 27 | 5 | 21 | 27 63 1 761 475 | 27 | 11 | 2 |
| 27 63 1 333 368 | 27 | 4 | 9 | 27 63 1 761 454 | 27 | 9 | 21 | 27 63 1 761 475 | 27 | 6 | 2 |
| 27 63 1 333 368 | 27 | 8 | 5 | 27 63 1 761 455 | 27 | 9 | 22 | 27 63 1 761 476 | 27 | 6 | 4 |
| 27 63 1 333 646 | 27 | 1 | 15 | 27 63 1 761 456 | 27 | 9 | 20 | 27 63 1 761 476 | 27 | 11 | 4 |
| 27 63 1 333 647 | 27 | 1 | 15 | 27 63 1 761 457 | 27 | 9 | 24 | 27 63 1 761 477 | 27 | 7 | 11 |
| 27 63 1 333 648 | 27 | 1 | 15 | 27 63 1 761 457 | 27 | 5 | 24 | 27 63 1 761 477 | 27 | 10 | 7 |
| 27 63 1 333 793 | 27 | 8 | 10 | 27 63 1 761 458 | 27 | 6 | 14 | 27 63 1 761 478 | 27 | 11 | 6 |
| 27 63 1 333 793 | 27 | 4 | 5 | 27 63 1 761 458 | 27 | 11 | 11 | 27 63 1 761 478 | 27 | 6 | 5 |
| 27 63 1 333 805 | 27 | 3 | 1 | 27 63 1 761 459 | 27 | 6 | 20 | 27 63 1 761 479 | 27 | 11 | 1 |
| 27 63 1 333 811 | 27 | 8 | 1 | 27 63 1 761 459 | 27 | 11 | 13 | 27 63 1 761 479 | 27 | 6 | 1 |
| 27 63 1 333 812 | 27 | 8 | 1 | 27 63 1 761 460 | 27 | 11 | 17 | 27 63 1 761 481 | 27 | 9 | 1 |
| 27 63 1 333 813 | 27 | 8 | 1 | 27 63 1 761 460 | 27 | 6 | 13 | 27 63 1 761 482 | 27 | 10 | 2 |
| 27 63 1 761 064 | 27 | 4 | 1 | 27 63 1 761 462 | 27 | 10 | 11 | 27 63 1 761 482 | 27 | 7 | 19 |
| 27 63 1 761 065 | 27 | 4 | 1 | 27 63 1 761 462 | 27 | 5 | 2 | 27 63 1 761 483 | 27 | 10 | 9 |
| 27 63 1 761 066 | 27 | 4 | 1 | 27 63 1 761 462 | 27 | 9 | 3 | 27 63 1 761 483 | 27 | 6 | 24 |
| 27 63 1 761 068 | 27 | 8 | 1 | 27 63 1 761 463 | 27 | 10 | 8 | 27 63 1 761 484 | 27 | 11 | 24 |
| 27 63 1 761 069 | 27 | 8 | 1 | 27 63 1 761 465 | 27 | 10 | 3 | 27 63 1 761 484 | 27 | 6 | 29 |
| 27 63 1 761 070 | 27 | 8 | 1 | 27 63 1 761 465 | 27 | 6 | 21 | 27 63 1 761 485 | 27 | 10 | 9 |
| 27 63 1 761 106 | 27 | 4 | 12 | 27 63 1 761 466 | 27 | 9 | 16 | 27 63 1 761 485 | 27 | 6 | 24 |
| 27 63 1 761 106 | 27 | 8 | 11 | 27 63 1 761 467 | 27 | 9 | 4 | 27 63 1 761 486 | 27 | 11 | 24 |
| 27 63 1 761 205 | 27 | 8 | 1 | 27 63 1 761 468 | 27 | 9 | 2 | 27 63 1 761 486 | 27 | 6 | 29 |
| 27 63 1 761 206 | 27 | 8 | 1 | 27 63 1 761 468 | 27 | 5 | 26 | 27 63 1 761 487 | 27 | 6 | 24 |
| 27 63 1 761 423 | 27 | 9 | 17 | 27 63 1 761 469 | 27 | 11 | 23 | 27 63 1 761 487 | 27 | 10 | 9 |
| 27 63 1 761 423 | 27 | 5 | 15 | 27 63 1 761 469 | 27 | 6 | 30 | 27 63 1 761 488 | 27 | 6 | 29 |

Teilenummern-Index
Part Number index
Index des numéros de pièces
Reservdelsnummer-Index
Indice dei numeri dei pezzi di ricambio



| Teile-Nummer | HG | S | Nr. | Teile-Nummer | HG | S | Nr. | Teile-Nummer | HG | S | Nr. |
|---|---|---|---|---|---|---|---|---|---|---|---|
| 27 63 1 761 488 | 27 | 11 | 24 | 27 63 1 761 532 | 27 | 9 | 2 | 61 11 1 333 927 | 62 | 3 | 2 |
| 27 63 1 761 489 | 27 | 9 | 18 | 27 63 1 761 533 | 27 | 11 | 23 | 61 11 1 334 140 | 62 | 4 | 2 |
| 27 63 1 761 489 | 27 | 5 | 13 | 27 63 1 761 534 | 27 | 10 | 1 | 61 11 1 334 216 | 62 | 4 | 9 |
| 27 63 1 761 490 | 27 | 5 | 1 | 27 63 1 761 535 | 27 | 11 | 5 | 61 12 1 362 920 | 12 | 1 | 10 |
| 27 63 1 761 491 | 27 | 9 | 22 | 27 63 1 761 536 | 27 | 11 | 3 | 61 13 1 243 092 | 12 | 6 | 6 |
| 27 63 1 761 491 | 27 | 5 | 22 | 27 63 1 761 537 | 27 | 11 | 7 | 61 13 1 328 916 | 62 | 2 | 13 |
| 27 63 1 761 492 | 27 | 5 | 3 | 27 63 1 761 539 | 27 | 11 | 4 | 61 13 1 328 974 | 62 | 2 | 12 |
| 27 63 1 761 493 | 27 | 7 | 20 | 27 63 1 761 540 | 27 | 10 | 4 | 61 13 1 328 974 | 62 | 1 | 10 |
| 27 63 1 761 494 | 27 | 6 | 33 | 27 63 1 761 541 | 27 | 10 | 5 | 61 13 1 328 974 | 62 | 3 | 11 |
| 27 63 1 761 495 | 27 | 6 | 32 | 27 63 1 761 542 | 27 | 10 | 2 | 61 13 1 329 978 | 12 | 6 | 4 |
| 27 63 1 761 496 | 27 | 6 | 31 | 27 63 1 761 543 | 27 | 10 | 9 | 61 13 1 331 901 | 12 | 6 | 3 |
| 27 63 1 761 497 | 27 | 7 | 3 | 27 63 1 761 544 | 27 | 11 | 24 | 61 13 1 331 916 | 62 | 3 | 12 |
| 27 63 1 761 498 | 27 | 7 | 12 | 27 63 1 761 546 | 27 | 10 | 9 | 61 13 1 331 916 | 62 | 1 | 9 |
| 27 63 1 761 499 | 27 | 7 | 9 | 27 63 1 761 547 | 27 | 11 | 24 | 61 13 1 331 928 | 12 | 5 | 11 |
| 27 63 1 761 500 | 27 | 7 | 10 | 27 63 1 761 548 | 27 | 10 | 7 | 61 13 1 334 153 | 62 | 4 | 15 |
| 27 63 1 761 501 | 27 | 7 | 4 | 27 63 1 761 549 | 27 | 10 | 9 | 61 13 1 334 307 | 62 | 4 | 12 |
| 27 63 1 761 502 | 27 | 7 | 5 | 27 63 1 761 550 | 27 | 11 | 24 | 61 13 1 334 308 | 62 | 4 | 13 |
| 27 63 1 761 503 | 27 | 7 | 2 | 27 63 1 761 857 | 27 | 8 | 19 | 61 13 1 353 136 | 12 | 5 | 8 |
| 27 63 1 761 504 | 27 | 7 | 1 | 27 63 1 761 857 | 27 | 4 | 2 | 61 13 8 760 139 | 12 | 5 | 10 |
| 27 63 1 761 505 | 27 | 9 | 23 | 27 63 1 763 200 | 27 | 1 | 14 | 61 14 1 334 179 | 62 | 4 | 18 |
| 27 63 1 761 507 | 27 | 9 | 15 | 27 63 1 763 200 | 27 | 4 | 17 | 61 14 8 648 136 | 62 | 3 | 4 |
| 27 63 1 761 508 | 27 | 9 | 21 | 32 41 1 117 181 | 13 | 6 | 6 | 61 14 8 648 136 | 62 | 1 | 3 |
| 27 63 1 761 509 | 27 | 9 | 24 | 32 41 1 117 181 | 13 | 7 | 6 | 61 14 8 648 136 | 62 | 2 | 6 |
| 27 63 1 761 520 | 27 | 11 | 13 | 32 41 1 261 404 | 12 | 1 | 15 | 61 31 1 331 910 | 62 | 1 | 4 |
| 27 63 1 761 521 | 27 | 11 | 17 | 51 91 1 330 467 | 51 | 1 | 1 | 61 31 1 331 910 | 62 | 3 | 13 |
| 27 63 1 761 523 | 27 | 9 | 3 | 51 91 1 330 468 | 51 | 1 | 2 | 61 31 1 331 910 | 62 | 2 | 14 |
| 27 63 1 761 523 | 27 | 10 | 11 | 51 91 1 330 469 | 51 | 1 | 3 | 61 31 1 331 993 | 62 | 3 | 23 |
| 27 63 1 761 525 | 27 | 10 | 3 | 51 91 1 330 470 | 51 | 1 | 4 | 61 31 1 333 901 | 62 | 3 | 14 |
| 27 63 1 761 526 | 27 | 9 | 16 | 51 91 1 330 471 | 51 | 1 | 5 | 61 31 1 333 901 | 62 | 2 | 15 |
| 27 63 1 761 527 | 27 | 9 | 4 | 51 91 1 330 481 | 51 | 1 | 7 | 61 31 1 333 903 | 62 | 3 | 25 |
| 27 63 1 761 528 | 27 | 11 | 20 | 51 91 1 330 502 | 51 | 1 | 6 | 61 31 1 333 903 | 62 | 2 | 16 |
| 27 63 1 761 529 | 27 | 11 | 20 | 61 11 1 331 907 | 62 | 1 | 15 | 61 31 1 334 110 | 62 | 4 | 20 |
| 27 63 1 761 530 | 27 | 11 | 20 | 61 11 1 331 923 | 62 | 1 | 2 | 61 31 1 334 113 | 62 | 4 | 5 |
| 27 63 1 761 531 | 27 | 11 | 20 | 61 11 1 331 957 | 62 | 2 | 4 | 61 31 1 334 114 | 62 | 4 | 6 |

Teilenummern-Index
Part Number index
Index des numéros de pièces
Reservdelsnummer-Index
Indice dei numeri dei pezzi di ricambio



| Teile-Nummer | HG | S | Nr. | Teile-Nummer | HG | S | Nr. | Teile-Nummer | HG | S | Nr. |
|---|---|---|---|---|---|---|---|---|---|---|---|
| 61 31 1 334 117 | 62 | 4 | 17 | 61 32 1 331 972 | 62 | 2 | 11 | 62 14 8 680 131 | 62 | 3 | 5 |
| 61 31 1 334 401 | 62 | 4 | 16 | 61 32 1 334 019 | 62 | 2 | 3 | 62 14 8 680 131 | 62 | 2 | 7 |
| 61 31 1 334 402 | 62 | 4 | 16 | 62 10 1 331 951 | 62 | 2 | 1 | 62 32 1 333 975 | 62 | 1 | 21 |
| 61 31 1 334 403 | 62 | 4 | 16 | 62 10 1 334 138 | 62 | 4 | 1 | 62 32 1 334 019 | 62 | 3 | 10 |
| 61 31 1 334 404 | 62 | 4 | 16 | 62 10 1 334 141 | 62 | 4 | 1 | 71 11 1 103 086 | 74 | 1 | 5 |
| 61 31 1 334 405 | 62 | 4 | 16 | 62 11 1 331 908 | 62 | 1 | 14 | 71 11 9 092 709 | 74 | 1 | 9 |
| 61 31 1 334 406 | 62 | 4 | 16 | 62 11 1 331 919 | 62 | 1 | 1 | 74 51 1 331 003 | 74 | 1 | 2 |
| 61 31 1 334 407 | 62 | 4 | 16 | 62 11 1 331 959 | 62 | 2 | 5 | 74 51 1 331 552 | 74 | 1 | 12 |
| 61 31 1 334 408 | 62 | 4 | 16 | 62 11 1 333 928 | 62 | 3 | 3 | 74 51 1 331 553 | 74 | 1 | 1 |
| 61 31 1 334 409 | 62 | 4 | 16 | 62 11 1 333 933 | 62 | 3 | 1 | 74 51 1 333 567 | 74 | 1 | 3 |
| 61 31 1 334 410 | 62 | 4 | 16 | 62 11 1 334 100 | 62 | 4 | 10 | 74 93 1 763 133 | 17 | 3 | 20 |
| 61 31 1 334 411 | 62 | 4 | 16 | 62 13 1 326 917 | 62 | 1 | 18 | | | | |
| 61 31 1 334 412 | 62 | 4 | 16 | 62 13 1 326 918 | 62 | 1 | 17 | | | | |
| 61 31 1 334 413 | 62 | 4 | 16 | 62 13 1 326 927 | 62 | 1 | 7 | | | | |
| 61 31 1 334 414 | 62 | 4 | 16 | 62 13 1 328 355 | 62 | 1 | 16 | | | | |
| 61 31 1 334 415 | 62 | 4 | 16 | 62 13 1 329 954 | 62 | 1 | 6 | | | | |
| 61 31 1 334 416 | 62 | 4 | 16 | 62 13 1 331 965 | 62 | 3 | 17 | | | | |
| 61 31 1 334 417 | 62 | 4 | 16 | 62 13 1 331 965 | 62 | 2 | 19 | | | | |
| 61 31 1 334 418 | 62 | 4 | 16 | 62 13 1 331 967 | 62 | 3 | 19 | | | | |
| 61 31 1 334 419 | 62 | 4 | 16 | 62 13 1 331 967 | 62 | 2 | 21 | | | | |
| 61 31 1 334 420 | 62 | 4 | 16 | 62 13 1 331 969 | 62 | 2 | 22 | | | | |
| 61 31 1 334 421 | 62 | 4 | 16 | 62 13 1 331 969 | 62 | 3 | 20 | | | | |
| 61 31 1 334 422 | 62 | 4 | 16 | 62 13 1 331 970 | 62 | 3 | 18 | | | | |
| 61 31 1 334 423 | 62 | 4 | 16 | 62 13 1 331 970 | 62 | 2 | 20 | | | | |
| 61 31 1 334 424 | 62 | 4 | 16 | 62 13 1 331 989 | 62 | 3 | 21 | | | | |
| 61 31 1 334 425 | 62 | 4 | 16 | 62 13 1 333 924 | 62 | 3 | 22 | | | | |
| 61 31 1 373 586 | 62 | 4 | 3 | 62 13 1 333 981 | 62 | 2 | 17 | | | | |
| 61 32 1 326 929 | 62 | 1 | 13 | 62 13 1 334 001 | 62 | 3 | 15 | | | | |
| 61 32 1 326 930 | 62 | 1 | 12 | 62 13 1 334 120 | 62 | 4 | 8 | | | | |
| 61 32 1 331 960 | 62 | 2 | 9 | 62 13 1 334 121 | 62 | 4 | 21 | | | | |
| 61 32 1 331 960 | 62 | 3 | 7 | 62 13 1 334 214 | 62 | 4 | 7 | | | | |
| 61 32 1 331 971 | 62 | 3 | 8 | 62 14 1 334 105 | 62 | 4 | 14 | | | | |
| 61 32 1 331 971 | 62 | 2 | 10 | 62 14 1 334 106 | 62 | 4 | 19 | | | | |
| 61 32 1 331 972 | 62 | 3 | 9 | 62 14 8 680 131 | 62 | 1 | 20 | | | | |

Kurbelgehäuse
Crankcase
Carter-moteur
Vevhus
Carter del manovellismo



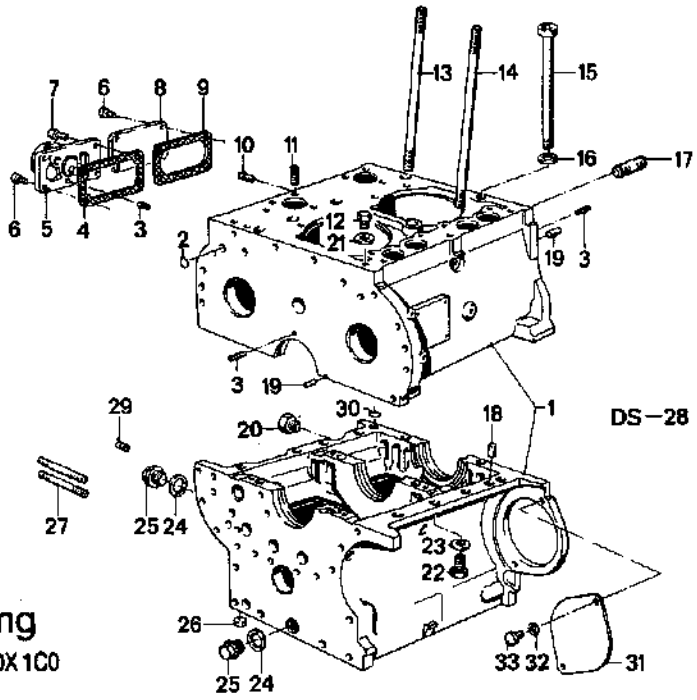


V12 Engineering
Box 50, Ontario, Canada P0X 1C0
www.bmwmarine.net



**11 1/1** 2/85

| Nr. | Teile-Nummer | Symbol | Benennung | D35—1 | D35—2 | D50—1 | D50—2 | Bemerkung |
|---|---|---|---|---|---|---|---|---|
| 1 | 11 11 1 763 372 | | kpl. Kurbelgehäuse / Crankcase / Carter-cylindres / Vevhus / Carter del manovellismo | 1 | 1 | | | |
| 2 | 11 12 1 329 531 | | O-Ring / O-Ring / Joint torique / O-ring / Anello-O | 1 | 1 | 1 | 1 | |
| 3 | 07 11 9 941 393 | | 5 × 24 Spannstift / Spring dowel sleeve / Goupille de serrage / Spännstift / Perno tenditore di fissaggio | 1 | 1 | 1 | 1 | |
| 4 | 13 51 1 333 123 | | Dichtung / Seal / Garniture / Packning 0 Guarnizione | 1 | 1 | 1 | 1 | |
| 5 | 13 51 1 763 470 | | kpl. Startfüllung / Start filling / Remplissage de départ / Startfyllning / Ripieno start | 1 | 1 | 1 | 1 | |
| 6 | 07 11 9 919 939 | | ZYL SHR M 8 × 16 | 2 | 2 | 6 | 6 | |
| 7 | 07 11 9 919 969 | | ZYL SHR M 8 × 20 | 4 | 4 | 4 | 4 | |
| 8 | 11 11 1 331 774 | | Deckel / Cover / Couvercle / Lock / Coperchio | 1 | 1 | 2 | 2 | |
| 9 | 11 11 1 331 775 | | Dichtung / Seal / Garniture / Packning / Guarnizione | 1 | 1 | 2 | 2 | |
| 10 | 07 11 9 909 012 | | STI SHR M 6 × 16 | 2 | 2 | 2 | 2 | |
| 11 | 07 11 9 909 063 | | STI SHR M 8 × 18 | 6 | 6 | 9 | 9 | |
| 12 | 07 11 9 919 209 | | VSL SHR M 8 × 1 | 1 | 1 | 1 | 1 | |
| 13 | 11 11 1 331 790 | | STI SHR | 8 | 8 | 12 | 12 | |
| 14 | 11 11 1 331 791 | | STI SHR | 2 | 2 | 3 | 3 | |
| 15 | 07 11 9 919 597 | | ZYL SHR M 12 × 1 | 6 | 6 | 8 | 8 | |
| 16 | 11 11 1 331 770 | | Scheibe / Washer / Rondelle / Bricka / Rondella | 6 | 6 | 8 | 8 | |
| 17 | 07 11 9 909 186 | | STI SHR M 14 × 45 | 4 | 4 | 4 | 4 | |
| 18 | 11 11 1 331 808 | | ZYL STI | 1 | 1 | 1 | 1 | |
| 19 | 07 11 9 942 126 | | ZYL STI | 2 | 2 | 2 | 2 | |
| 20 | 07 11 9 919 112 | | VSL SHR M 10 × 1 | 1 | 1 | 1 | 1 | |
| 21 | 07 11 9 963 072 | | DT RG A 10 | | | 1 | 1 | |
| 22 | 07 11 9 913 643 | | 6 KT SHR M 8 × 20 | 8 | 8 | 10 | 10 | |
| 23 | 07 11 9 933 096 | | B 8 Federring / Spring lockwasher / Rondelle élastique / Fjäderbricka / Anello elastico | 8 | 8 | 12 | 12 | |
| 24 | 07 11 9 963 354 | | DT RG A 22 × 27 | 2 | 2 | 2 | 2 | |
| 25 | 07 11 9 919 252 | | VSL SHR M 22 × 1,5 | 2 | 2 | 2 | 2 | |
| 26 | 07 11 9 937 223 | | 13 Deckel / Cover / Couvercle / Lock / Coperchio | 4 | 4 | 4 | 4 | |
| 27 | 07 11 9 909 098 | | STI SHR M 8 × 80 | 4 | | 4 | | |

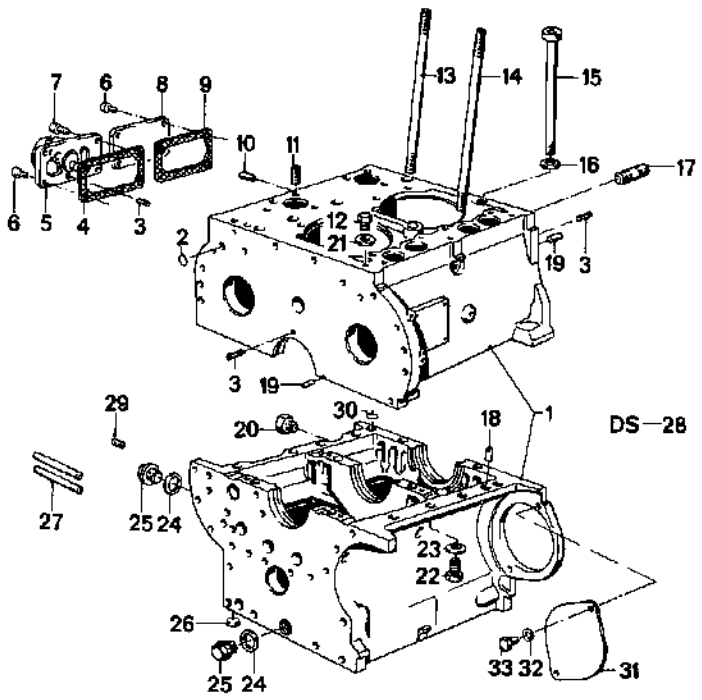


**11**
**1/2**
D 35
2/85

**11 1/2** 2/85

| Nr. | Teile-Nummer | Symbol | Benennung | D 35–1 | D 35–2 | D 50–1 | D 50–2 | Bemerkung |
|---|---|---|---|---|---|---|---|---|
| 28 | 11 00 1 333 352 | D S | kpl. Motor / Engine / Moteur / Motor / Motor | 1 | | | | |
| | 11 00 1 761 085 | D S | dito | | 1 | | | |
| 29 | 11 11 1 333 303 | | Gewindestift / Threaded pin / Goupille filetée / Gängstift / Spina filettata | 1 | | 1 | | |
| 30 | 11 11 1 333 381 | | O-Ring / O-ring / Joint torique / O-ring / Anello-O | 1 | 1 | 1 | 1 | |
| 31 | 11 11 1 333 256 | | Verschlußdeckel / Blanking cover / Couvercle d'obturation / Täcklock / Coperchio di chiusura | 1 | 1 | 1 | 1 | |
| 32 | 07 11 9 933 127 | | B 12 Federring / Spring lock washer / Rondelle élastique / Fjäderbricka Anello elastico | 2 | 2 | 2 | 2 | |
| 33 | 11 11 1 333 384 | | 6 KT SHR M 12 × 16 | 2 | 2 | 2 | 2 | |

Kurbelgehäuse
Crankcase
Carter-moteur
Vevhus
Carter del manovellismo

BMW D 35 / D 50

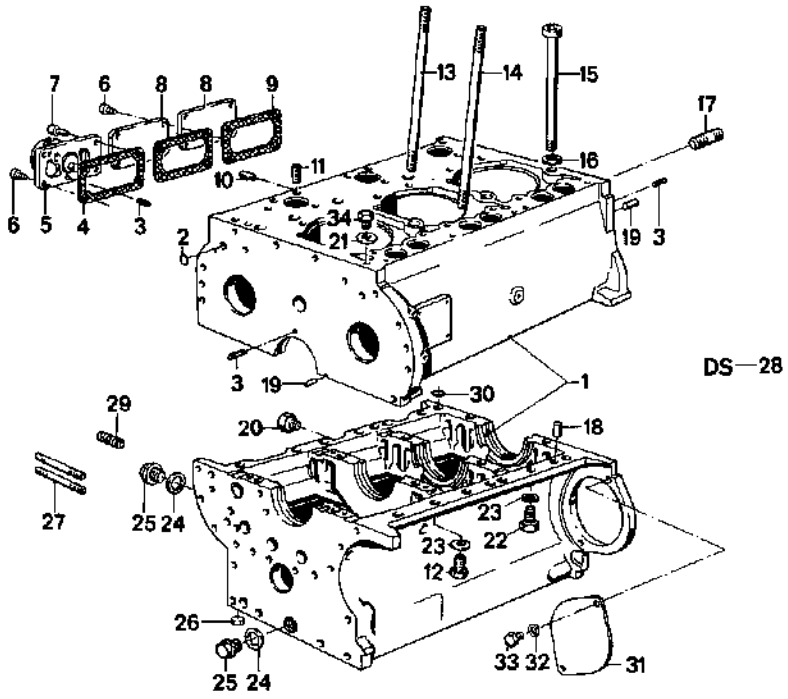


**11 / 2/1**
D 50
2/85

**11 / 2/1** 2/85

| Nr. | Teile-Nummer | Symbol | Benennung | D35-1 | D35-2 | D50-1 | D50-2 | Bemerkung |
|---|---|---|---|---|---|---|---|---|
| 1 | 11 11 1 783 373 | | kpl. Kurbelgehäuse / Crankcase / Carter-cylindres / Vevhus / Carter del manovellismo | | | 1 | 1 | |
| 2 | 11 12 1 329 531 | | O-Ring / O-Ring / Joint torique / O-ring / Anello-O | 1 | 1 | 1 | 1 | |
| 3 | 07 11 9 941 393 | | 5 x 24 Spannstift / Spring dowel sleeve / Goupille de serrage / Spännstift / Perno tenditore di fissaggio | 1 | 1 | 1 | 1 | |
| 4 | 13 51 1 333 123 | | Dichtung / Seal / Garniture / Packning / Guarnizione | 1 | 1 | 1 | 1 | |
| 5 | 13 51 1 763 470 | | kpl. Startfüllung / Start filling / Remplissage de départ / Startfyllning / Ripieno start | 1 | 1 | 1 | 1 | |
| 6 | 07 11 9 919 939 | | ZYL SHR M 8 x 16 | 2 | 2 | 6 | 6 | |
| 7 | 07 11 9 919 969 | | ZYL SHR M 8 x 20 | 4 | 4 | 4 | 4 | |
| 8 | 11 11 1 331 774 | | Deckel / Cover / Couvercle / Lock / Coperchio | 1 | 1 | 2 | 2 | |
| 9 | 11 11 1 331 775 | | Dichtung / Seal / Garniture / Packning / Guarnizione | 1 | 1 | 2 | 2 | |
| 10 | 07 11 9 909 012 | | STI SHR M 6 x 16 | 2 | 2 | 2 | 2 | |
| 11 | 07 11 9 909 063 | | STI SHR M 8 x 18 | 6 | 6 | 9 | 9 | |
| 12 | 07 11 9 913 855 | | 6 KT SHR M 8 x 25 | | | 2 | 2 | |
| 13 | 11 11 1 331 790 | | STI SHR | 8 | 8 | 12 | 12 | |
| 14 | 11 11 1 331 791 | | STI SHR | 2 | 2 | 3 | 3 | |
| 15 | 07 11 9 919 597 | | ZYL SHR M 12 x 1 | 6 | 6 | 8 | 8 | |
| 16 | 11 11 1 331 770 | | Scheibe / Washer / Rondelle / Bricka / Rondella | 6 | 6 | 8 | 8 | |
| 17 | 07 11 9 909 186 | | STI SHR M 14 x 45 | 4 | 4 | 4 | 4 | |
| 18 | 11 11 1 331 808 | | ZYL STI | 1 | | 1 | | |
| 19 | 07 11 9 942 126 | | ZYL STI | 2 | 2 | 2 | 2 | |
| 20 | 07 11 9 919 112 | | VSL SHR M 10 x 1 | 1 | 1 | 1 | 1 | |
| 21 | 07 11 9 963 072 | | DT RG A 10 | | | 1 | 1 | |
| 22 | 07 11 9 913 643 | | 6 KT SHR M 8 x 20 | 8 | 6 | 10 | 10 | |
| 23 | 07 11 9 933 096 | | B 8 Federring / Spring lock washer / Rondelle élastique / Fjäderbricka / Anello elastico | 8 | 8 | 12 | 12 | |
| 24 | 07 11 9 963 354 | | DT RG A 22 x 27 | 2 | 2 | 2 | 2 | |
| 25 | 07 11 9 919 252 | | VSL SHR M 22 x 1,5 | 2 | 2 | 2 | 2 | |
| 26 | 07 11 9 937 223 | | 13 Deckel / Cover / Couvercle / Lock / Coperchio | 4 | 4 | 4 | 4 | |
| 27 | 07 11 9 909 098 | | STI SHR M 8 x 80 | 4 | | 4 | | |

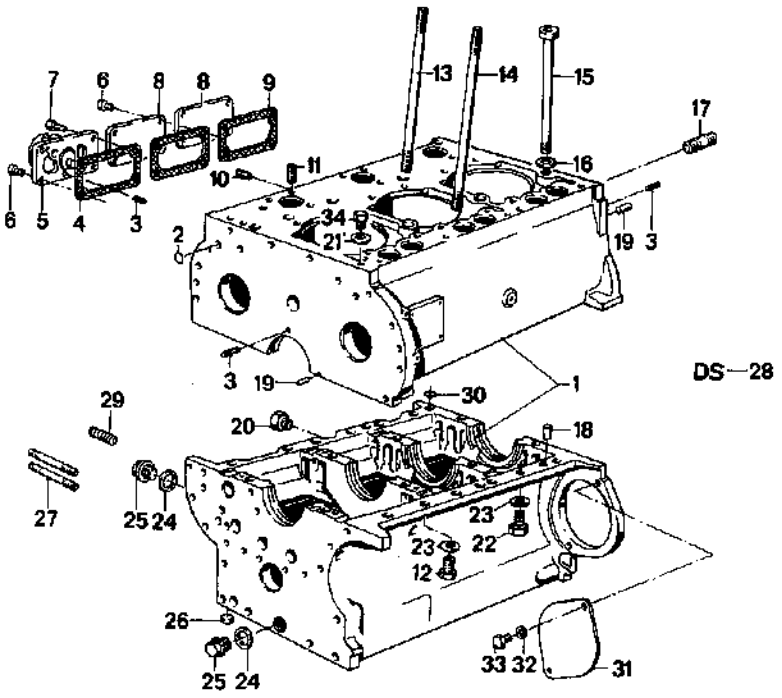


**11**
**2/2**
D 50
2/85

**11 2/2** 2/85

| Nr. | Teile-Nummer | Symbol | Benennung | D 35–1 | D 35–2 | D 50–1 | D 50–2 | Bemerkung |
|---|---|---|---|---|---|---|---|---|
| 28 | 11 00 1 333 353 | DS | kpl. Motor / Engine / Moteur / Motor / Motor | | | 1 | | |
| | 11 00 1 761 086 | DS | dito | | | | 1 | |
| 29 | 11 11 1 333 303 | | Gewindestift / Threaded pin / Goupille filetée / Gängstift / Spina filettata | 1 | | 1 | | |
| 30 | 11 11 1 333 381 | | O-Ring / O-ring / Joint torique / O-ring / Anello-O | 1 | 1 | 1 | 1 | |
| 31 | 11 11 1 333 256 | | Verschlußdeckel / Blanking cover / Couvercle d'obturation / Täcklock / Coperchio di chiusura | 1 | 1 | 1 | 1 | |
| 32 | 07 11 9 933 127 | | B 12 Federring / Spring lock washer / Rondelle élastique / Fjäderbricka / Anello elastico | 2 | 2 | 2 | 2 | |
| 33 | 11 11 1 333 384 | | 6 KT SHR M 12 × 16 | 2 | 2 | 2 | 2 | |
| 34 | 07 11 9 919 209 | | VSL SHR M 8 × 1 | 1 | 1 | 1 | 1 | |

Zylinder mit Kolben
Cylinder with piston
Cylindre avec piston
Cylinder med kolv
Cilindro con pistone

BMW D35 / D50

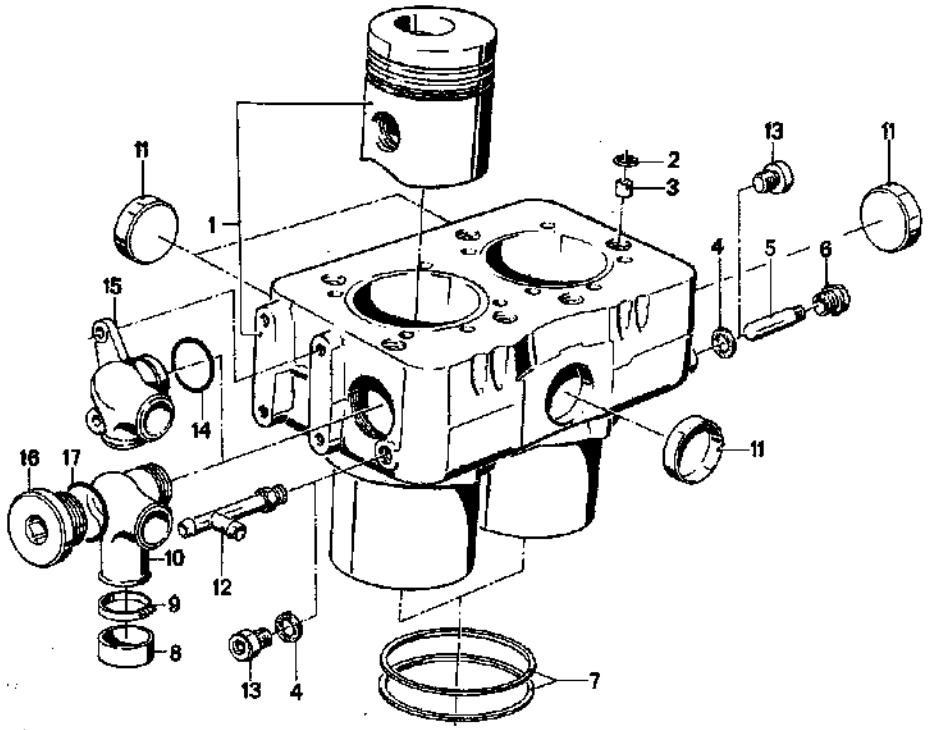


11/3 D35 2/85

| 11/3 2/85 Nr. | Teile-Nummer | Symbol | Benennung | D35-1 | D35-2 | D50-1 | D50-2 | Bemerkung |
|---|---|---|---|---|---|---|---|---|
| 1 | 11 11 1 761 551 | | Zylinder mit Kolben / Cylinder with piston / Cylindre avec piston / Cylinder med kolv / Cilindro con pistone | 1 | 1 | | | |
| 2 | 11 12 1 331 565 | | 10 x 3,5 O-Ring / O-ring / Joint torique / O-ring / Anello-O | 6 | 6 | 9 | 9 | |
| 3 | 07 11 9 941 486 | | Spannstift / Spring dowel sleeve / Goupille de serrage / Spännstift / Perno tenditore di fissaggio | 2 | 2 | 3 | 3 | |
| 4 | 07 11 9 963 290 | | DT RG A 17 | 1 | 2 | 1 | 1 | |
| 5 | 17 11 1 329 197 | | Opferanode / Reactive anode / Anode consommable / Offeranod / Anodo anticorrosione | 1 | | 1 | | |
| 6 | 17 11 1 763 345 | | VSL SHR 3/8" | 1 | | 1 | | |
| 7 | 11 11 1 331 793 | | 0,1 Dichtung / Seal / Garniture / Packning / Guarnizione | X | X | X | X | |
| | 11 11 1 331 807 | | 0,15 dito | X | X | X | X | |
| | 11 11 1 331 792 | | 0,2 dito | X | X | X | X | |
| 8 | 11 53 1 326 635 | | Verschlußklappe / Cap / Capuchon / Tillslutningskåpe / Cuffia di chiusura | | 1 | | 1 | |
| 9 | 11 53 1 326 623 | | 25–40 Schelle / Clamp / Collier / Klämma / Fascetta | | 1 | | 1 | |
| 10 | 11 11 1 333 699 | | Stutzen / Connection / Tubulure / Stuts / Bocchettone | | 1 | | 1 | |
| 11 | 11 11 1 761 140 | | 45 Verschlußdeckel / Cover / Bouchon / Lock / Coperchio di chiusura | 4 | 4 | 6 | 6 | |
| 12 | 17 12 1 331 448 | | T-Stück / Tee / Raccord à trois voies / T-stycke / Elemento a T | 1 | | 1 | | |
| 13 | 07 11 9 919 140 | | VSL SHR 3/8" | | 2 | | 1 | |
| 14 | 11 11 1 333 346 | | O-Ring / O-ring / Joint torique / O-ring / Anello-O | | 1 | | 1 | |
| 15 | 11 11 1 333 341 | | Stutzen / Connection / Tubulure / Stuts / Bocchettone | | 1 | | 1 | |
| 16 | 11 11 1 763 209 | | VSL SHR 1" | | 1 | | 1 | |
| 17 | 07 11 9 963 473 | | DT RG A 33 | 1 | | 1 | | |

V12 Engineering
Box 50, Ontario, Canada P0X 1C0
www.bmwmarine.net

Zylinder mit Kolben
Cylinder with piston
Cylindre avec piston
Cylinder med kolv
Cilindro con pistone



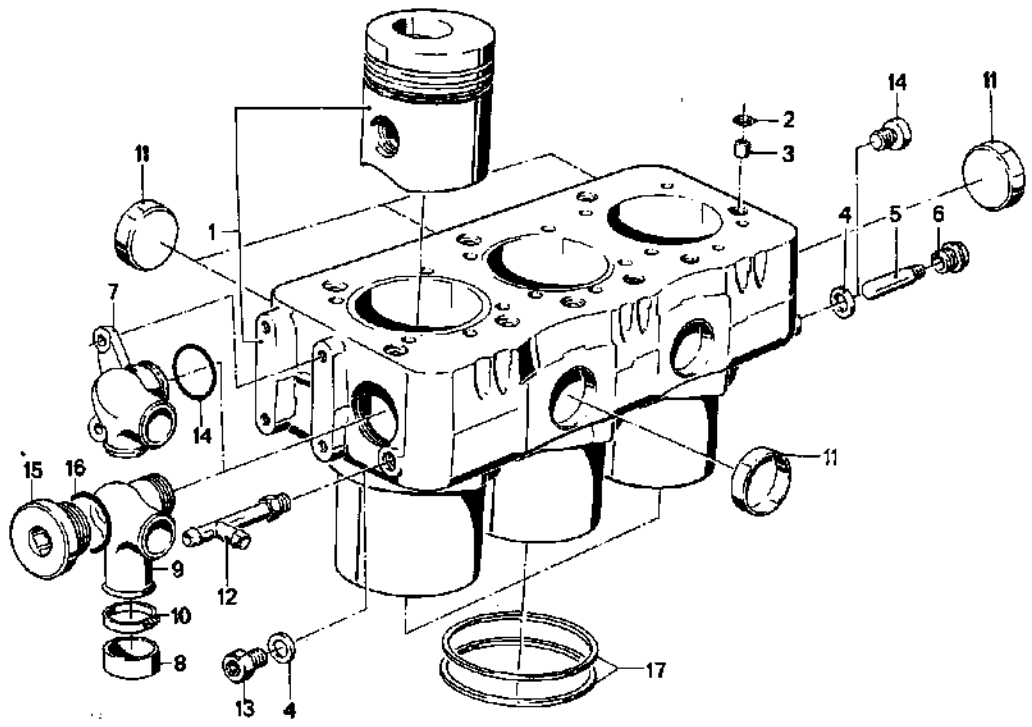


**11/4** D 50 2/85

**11/4** 2/85

| Nr. | Teile-Nummer | Symbol | Benennung | D 35–1 | D 35–2 | D 50–1 | D 50–2 | Bemerkung |
|---|---|---|---|---|---|---|---|---|
| 1 | 11 11 1 761 552 | | Zylinder mit Kolben / Cylinder with piston / Cylindre avec piston / Cylinder med kolv / Cilindro con pistone | | | 2 | 2 | |
| 2 | 11 12 1 331 565 | | 10 × 3,5 O-Ring / O-ring / Joint torique / O-ring / Anello-O | 6 | 8 | 9 | 9 | |
| 3 | 07 11 9 941 498 | | Spannstift / Spring dowel sleeve / Goupille de serrage / Spännstift / Perno tenditore di fissaggio | 2 | 2 | 3 | 3 | |
| 4 | 07 11 9 963 290 | | DT RG A 17 | 1 | 2 | 1 | 1 | |
| 5 | 17 11 1 329 197 | | Opferanode / Reactive anode / Anode consommable / Offeranod / Teile- anticorrosione | 1 | | 1 | | |
| 6 | 17 11 1 763 345 | | VSL SHR 3/8" | 1 | | 1 | | |
| 7 | 11 11 1 333 341 | | Stutzen / Connection / Tubulare / Stuts / Bocchettone | | 1 | | 1 | |
| 8 | 11 53 1 328 635 | | Verschlußkappe / Cap / Capuchon / Tillslutningskåpa / Chuffia di chiusura | | 1 | | 1 | |
| 9 | 11 11 1 333 599 | | Stutzen / Connection / Tubulare / Stuts / Bocchettone | | 1 | | 1 | |
| 10 | 11 53 1 326 523 | | 25–40 Schelle / Clamp / Collier / Klämma / Fascetta | | 1 | | 1 | |
| 11 | 11 11 1 761 140 | | 45 Verschlußdeckel / Cover / Bouchon / Lock / Coperchio di chiusura | 4 | 4 | 6 | 6 | |
| 12 | 17 12 1 763 101 | | T-Stück / Tee / Raccord à trois voies / T-stycke / Elemento a T | | | 1 | | |
| 13 | 07 11 9 919 140 | | VSL SHR 3/8" | | 2 | | 1 | |
| 14 | 11 11 1 333 346 | | O-Ring / O-ring / Joint torique / O-ring / Anello-O | | 1 | | 1 | |
| 15 | 11 11 1 763 209 | | VSL SHR 1" | 1 | | 1 | | |
| 16 | 07 11 9 963 473 | | DT RG A 33 | | 1 | | 1 | |
| 17 | 11 11 1 331 793 | | 0,1 Dichtung / Seal / Garniture / Packning / Guarnizione | X | X | X | X | |
| | 11 11 1 331 807 | | 0,15 dito | X | X | X | X | |
| | 11 11 1 331 792 | | 0,2 dito | X | X | X | X | |

# Zylinderkopf
# Cylinder head
# Culasse de cylindre
# Cylindertopp
# Testata

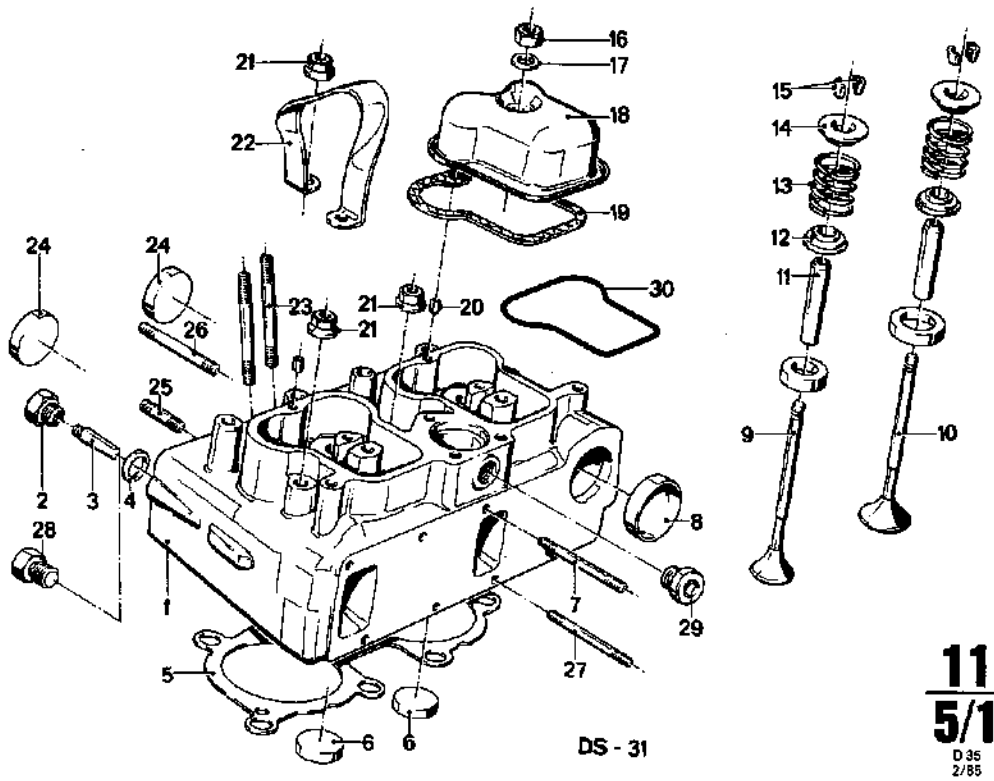


DS - 31

**11 / 5/1**
D 35
2/85

**11 / 5/1** 2/85

| Nr. | Teile-Nummer | Symbol | Benennung | D 35–1 | D 35–2 | D 50–1 | D 50–2 | Bemerkung |
|---|---|---|---|---|---|---|---|---|
| 1 | e a 11 12 1 331 800 | | Zylinderkopf / Cylinder head / Culasse de cylindre / Cylindertopp / Testata | 1 | 1 | | | |
| | e b 11 12 1 761 535 | | dito | 1 | 1 | | | |
| 2 | 17 11 1 763 345 | | VSL SHR R 3/8" | 1 | | 1 | | |
| 3 | 17 11 1 329 197 | | Opferanode / Reactive anode / Anode consommable / Offeranod / Anodo anticorrosione | 1 | | 1 | | |
| 4 | 07 11 9 963 290 | | DT RG A 17 | 1 | | 1 | | |
| 5 | 11 12 1 331 566 | | Dichtung / Seal / Garniture / Packning / Guarnizione | 1 | 1 | | | |
| 6 | 11 11 1 761 141 | | 36 Verschlußdeckel / Cover / Bouchon / Lock / Coperchio di chiusura | 2 | 2 | 3 | 3 | |
| 7 | 07 11 9 909 099 | | STI SHR M 8 × 85 | 6 | | 10 | | |
| 8 | 11 11 1 761 142 | | 38 Verschlußdeckel / Cover / Bouchon / Lock / Coperchio di chiusura | 1 | 1 | 1 | 1 | |
| 9 | 11 34 1 333 016 | | Ventilkegel-Einlaß / Inlet valve cone / Tête de soupape d'admission / Ventilkägla, intag / Entrata cono valvola | 2 | 2 | 3 | 3 | |
| 10 | 11 34 1 333 017 | | Ventilkegel-Auslaß / Outlet valve cone / Tête de soupape d'échappement / Ventilkägla, utlopp / Uscita cono valvola | 2 | 2 | 3 | 3 | |
| 11 | 11 12 1 333 144 | | Ventilführung / Valve guide / Guide de soupape / Ventilstyrning / Guidavalvola | 4 | 4 | 6 | 6 | |
| 12 | 11 34 1 333 019 | | Unterlegscheibe / Washer / Rondelle / Underläggsbricka / Disco d'appoggio | 4 | 4 | 6 | 6 | |
| 13 | 11 34 1 333 020 | | Ventilfeder / Valve spring / Ressort de soupape / Ventilfjäder / Molla della valvola | 4 | 4 | 6 | 6 | |
| 14 | 11 34 1 333 021 | | Federteller / Spring plate / Disque de ressort / Fjäderbricka / Scondellino | 4 | 4 | 6 | 6 | |
| 15 | 11 34 1 333 018 | | Ventilkonus / Valve cone / Cône de soupape / Ventilkona / Cono valvola | 4 | 4 | 6 | 6 | |
| 16 | 11 12 1 761 721 | | 6 KT MU M 10 | 2 | 2 | 3 | 3 | |
| 17 | 07 11 9 931 072 | | B 10,5 Scheibe / Washer / Rondelle / Bricka / Rondella | 2 | 2 | 3 | 3 | |
| 18 | c 11 12 1 331 810 | | Deckel / Cover / Couvercle / Lock / Coperchio | 2 | 2 | 3 | 3 | |
| | d 11 12 1 761 677 | | dito | 2 | 2 | 3 | 3 | |
| 19 | c 11 12 1 331 558 | | Dichtung / Seal / Garniture / Packning / Guarnizione | 2 | 2 | 3 | 3 | |

a) → Mot. Nr. 1098
b) Mot. Nr. 1099 →
c) → Mot. Nr. 1571
d) Mot. Nr. 1572 →

e) ohne Ventile / without valve / sans soupape / utan ventil / senza valvola

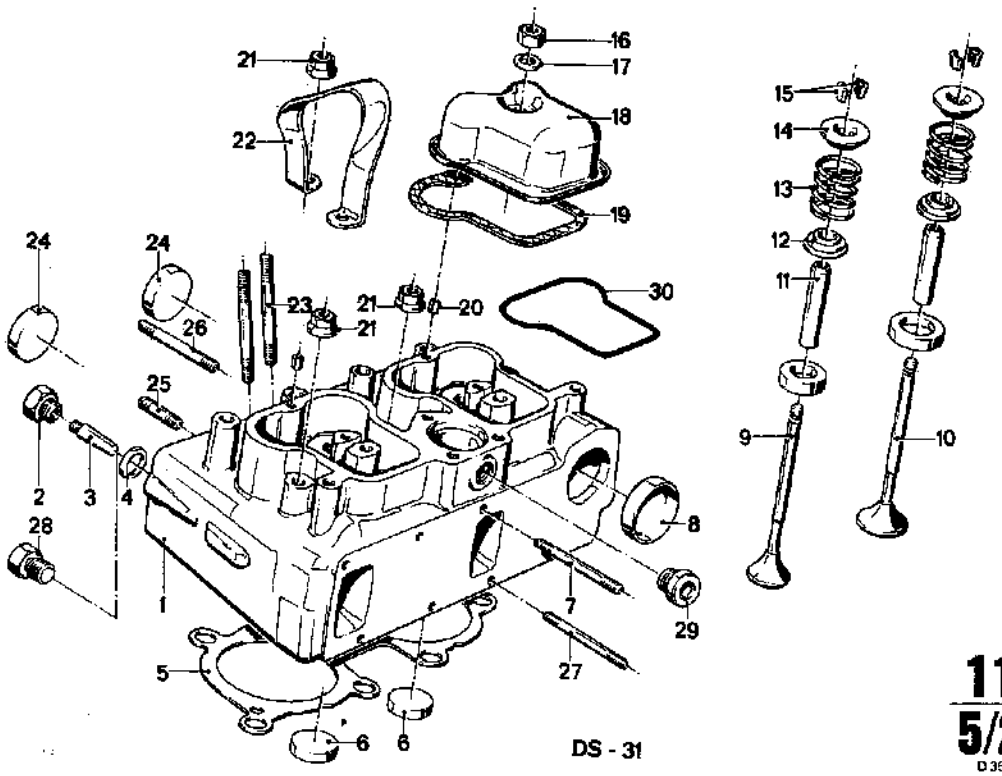






| Nr. | Teile-Nummer | Symbol | Benennung | D35–1 | D35–2 | D50–1 | D50–2 | Bemerkung |
|---|---|---|---|---|---|---|---|---|
| 20 | 07 11 9 941 353 | | 6 × 12 Spannhülse / Clamping sleeve / Douille de serrage / Spännhylsa / Boccola a tache | 2 | 2 | 3 | 3 | |
| 21 | 11 11 1 331 794 | | M 9 Bundmutter / Coupling nut / Ecrou à bourrelet / Flänsmutter / Dado a colletto | 10 | 10 | 15 | 15 | |
| 22 | 11 12 1 331 806 | | Aufzuglasche / Pull clip / Eclisse de levage / Uppdragningslask / Coprigiunto di elevazione | 1 | 1 | 1 | 1 | |
| 23 | 11 12 1 333 131 | | STI SHR M 8 × 65 | 4 | 4 | 6 | 6 | |
| 24 | 11 11 1 761 140 | | 45 Verschlußdeckel / Cover / Bouchon / Lock / Coperchio di chiusura | 2 | 2 | 4 | 4 | |
| 25 | 07 11 9 909 082 | | STI SHR M 8 × 35 | 4 | 4 | | | |
| 26 | 07 11 9 909 110 | | STI SHR M 8 × 120 | | 3 | | 5 | |
| 27 | 07 11 9 909 108 | | STI SHR M 8 × 110 | | 3 | | 5 | |
| 28 | 07 11 9 919 140 | | VSL SHR 3/8" | | 1 | | 1 | |
| 29 | 07 11 9 919 015 | | VSL SHR M 14 × 1,5 | | 1 | | 1 | |
| 30 | d 11 12 1 761 640 | | O-Ring / O-ring / Joint torique / O-ring / Anello-O | 2 | 2 | 3 | 3 | |
| 31 | 11 00 1 761 134 | DS | Zylinderkopf / Cylinder head / Culasse de cylindre / Cylindertopp / Testata | 1 | 1 | | | |

a) → Mot. Nr. 1098
b) Mot. Nr. 1099 →
c) → Mot. Nr. 1571
d) Mot. Nr. 1572 →
e) ohne Ventile / without valve / sans soupape / utan ventil / senza valvole

Zylinderkopf
Cylinder head
Culasse de cylindre
Cylindertopp
Testata

BMW D 35 / D 50

V12 Engineering
Box 50, Ontario, Canada P0X 1C0
www.bmwmarine.net

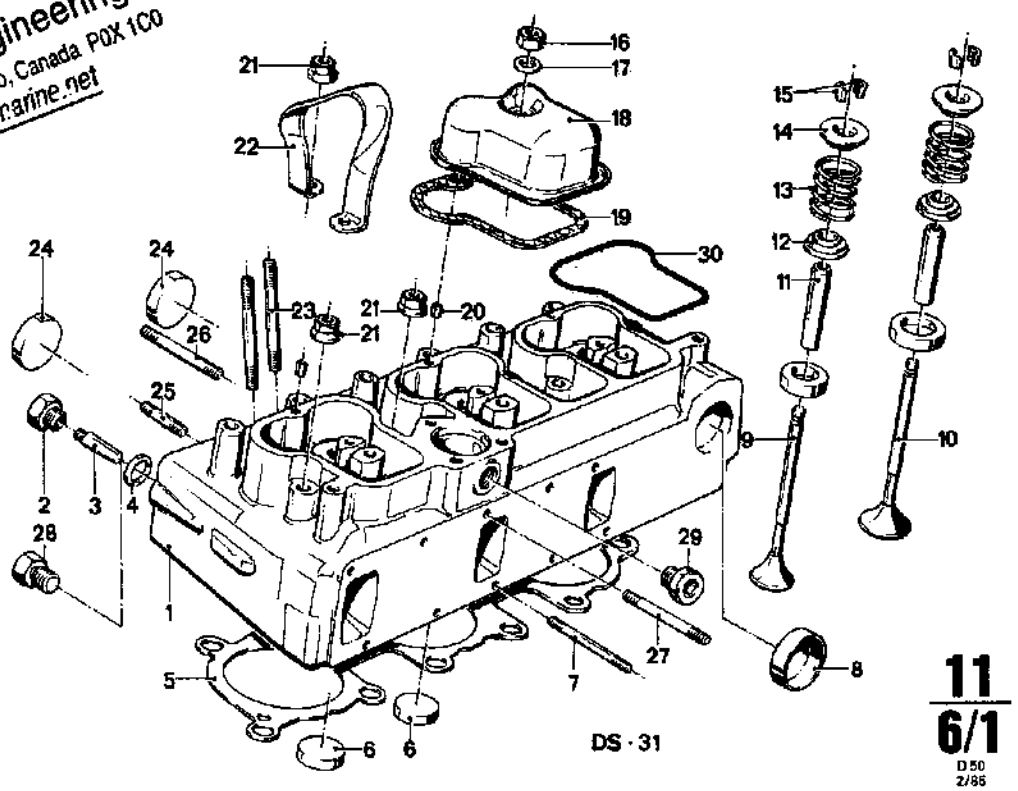


**11 / 6/1**
D 50
2/85

| 11 / 6/1 | 2/85 | | | D 35–1 | D 35–2 | D 50–1 | D 50–2 | | |
|---|---|---|---|---|---|---|---|---|---|
| Nr. | Teile-Nummer | Symbol | Benennung | | | | | | Bemerkung |
| 1 | e a 11 12 1 331 799 | | Zylinderkopf / Cylinder head / Culasse de cylindre / Cylindertopp / Testata | | | 1 | 1 | | |
| | e b 11 12 1 761 636 | | dito | | | 1 | 1 | | |
| 2 | 17 11 1 763 345 | | VSLSHR R 3/8" | 1 | | 1 | | | |
| 3 | 17 11 1 329 197 | | Opferanode / Reactive anode / Anode consommable / Offeranod / Anodo anticorrosione | 1 | | 1 | | | |
| 4 | 07 11 9 963 290 | | DTRG A 17 | 1 | | 1 | | | |
| 5 | 11 12 1 331 559 | | Dichtung / Seal / Garniture / Packning / Guarnizione | | | 1 | 1 | | |
| 6 | 11 11 1 761 141 | | 36 Verschlußdeckel / Cover / Bouchon / Lock / Coperchio di chiusura | 2 | 2 | 3 | 3 | | |
| 7 | 07 11 9 909 099 | | STISHR M 8 × 85 | 6 | 6 | 10 | 10 | | |
| 8 | 11 12 1 761 142 | | 38 Verschlußdeckel / Cover / Bouchon / Lock / Coperchio di chiusura | 1 | 1 | 1 | 1 | | |
| 9 | 11 34 1 333 016 | | Ventilkegel-Einlaß / Inlet valve cone / Tête de soupape d'admission / Ventilkägla, intag / Entrata cono valvola | 2 | 2 | 3 | 3 | | |
| 10 | 11 34 1 333 017 | | Ventilkegel-Auslaß / Outlet valve cone / Tête de soupape d'échappement / Ventilkägla, utlopp / Uscita cono valvola | 2 | 2 | 3 | 3 | | |
| 11 | 11 12 1 333 144 | | Ventilführung / Valve guide / Guide de soupape / Ventilstyrning / Guidavalvola | 4 | 4 | 6 | 6 | | |
| 12 | 11 34 1 333 019 | | Unterlegscheibe / Washer / Rondelle / Underläggsbricka / Disco d'appoggio | 4 | 4 | 6 | 6 | | |
| 13 | 11 34 1 333 020 | | Ventilfeder / Valve spring / Ressort de soupape / Ventilfjäder / Molla della valvola | 4 | 4 | 6 | 6 | | |
| 14 | 11 34 1 333 021 | | Federteller / Spring plate / Disque de ressort / Fjäderbricka / Scodellino | 4 | 4 | 6 | 6 | | |
| 15 | 11 34 1 333 018 | | Ventilkonus / Valve cone / Cône de soupape / Ventilkona / Cono valvola | 4 | 4 | 6 | 6 | | |
| 16 | 11 12 1 761 721 | | 6 KT MU M 10 | 2 | 2 | 3 | 3 | | |
| 17 | 07 11 9 931 072 | | B 10,5 Scheibe / Washer / Rondelle / Bricka / Rondella | 2 | 2 | 3 | 3 | | |
| 18 | c 11 12 1 331 810 | | Deckel / Cover / Couvercle / Lock / Coperchio | 2 | 2 | 3 | 3 | | |
| | d 11 12 1 761 677 | | dito | 2 | 2 | 3 | 3 | | |
| 19 | c 11 12 1 331 558 | | Dichtung / Seal / Garniture / Packning / Guarnizione | 2 | 2 | 3 | 3 | | |

a) → Mot. Nr. 1098
b) Mot. Nr. 1099 →
c) → Mot. Nr. 1571
d) Mot. Nr. 1572 →

e) ohne Ventile / without valve / sans soupape / utan ventil / senza valvola

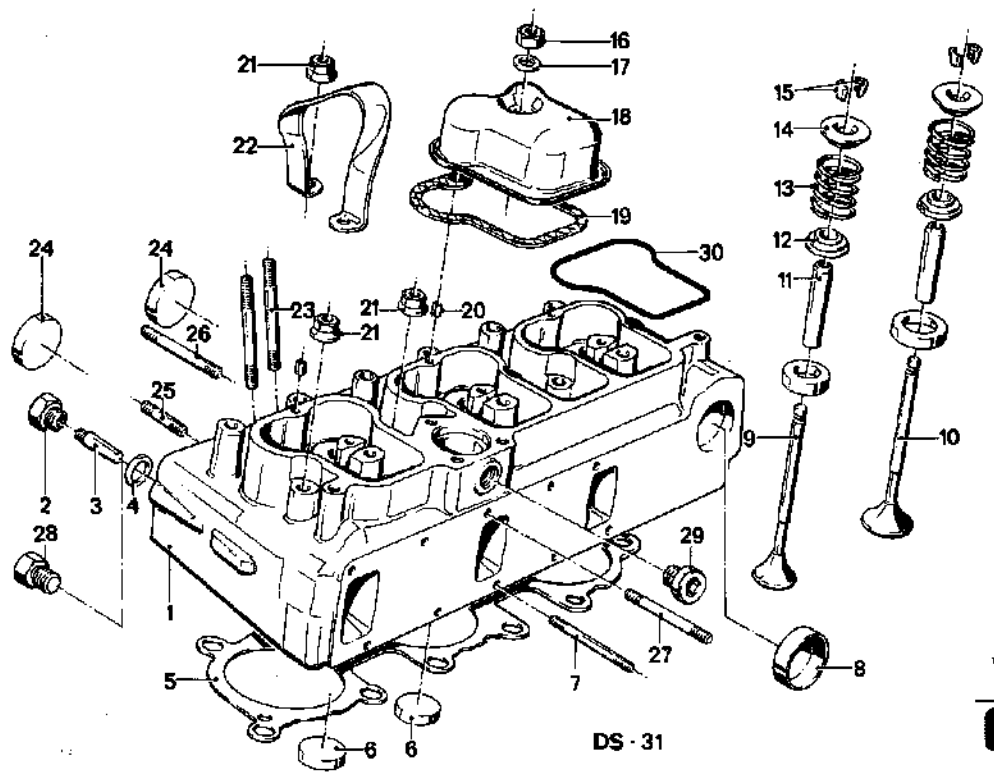


DS - 31

**11 / 6/2**
D 50
2/85

**11 / 6/2**

| Nr. | Teile-Nummer | Symbol | Benennung | D 35–1 | D 35–2 | D 50–1 | D 50–2 | Bemerkung |
|---|---|---|---|---|---|---|---|---|
| 20 | 07 11 9 941 353 | | 6 × 12 Spannhülse / Clamping sleeve / Douille de serrage / Spännhylsa / Boccola a tache | 2 | 2 | 3 | 3 | |
| 21 | 11 11 1 331 794 | | M 9 Bundmutter / Coupling nut / Ecrou à bourrelet / Flänsmutter / Dado a colletto | 10 | 10 | 15 | 15 | |
| 22 | 11 12 1 331 806 | | Aufzuglasche / Pull clip / Eclisse de levage / Uppdragningslask / Coprigiunto di elevazione | 1 | 1 | 1 | 1 | |
| 23 | 11 12 1 333 131 | | STI SHR M 8 × 65 | 4 | 4 | 6 | 6 | |
| 24 | 11 11 1 761 140 | | 45 Verschlußdeckel / Cover / Bouchon / Lock / Coperchio di chiusura | 2 | 2 | 4 | 4 | |
| 25 | 07 11 9 909 469 | | STI SHR M 8 × 50 | | | 6 | 6 | |
| 26 | 07 11 9 909 110 | | STI SHR M 8 × 120 | | 3 | | 5 | |
| 27 | 07 11 9 909 106 | | STI SHR M 8 × 110 | | 3 | | 5 | |
| 28 | 07 11 9 919 140 | | VSL SHR 3/8" | | 1 | | 1 | |
| 29 | 07 11 9 919 015 | | VSL SHR M 14 × 1,5 | | 1 | | 1 | |
| 30 | d 11 12 1 761 640 | | O-Ring / O-ring / Joint torique / O-ring / Anello-O | 2 | 2 | 3 | 3 | |
| 31 | 11 00 1 761 135 | DS | Zylinderkopf / Cylinder head / Culasse de cylindre / Cylindertopp / Testata | | | 1 | 1 | |

a) → Mot. Nr. 863 / 882–918
b) Mot. Nr. 864 → 883, 919 →
c) → Mot. Nr. 1945
d) Mot. Nr. 1946 →
e) ohne Ventile / without valve / sans soupape / utan ventil

Ölversorgung
Oil supply
Distribution d'huile
Oljeförsörjning
Alimentazione olio

BMW D 35 / D 50

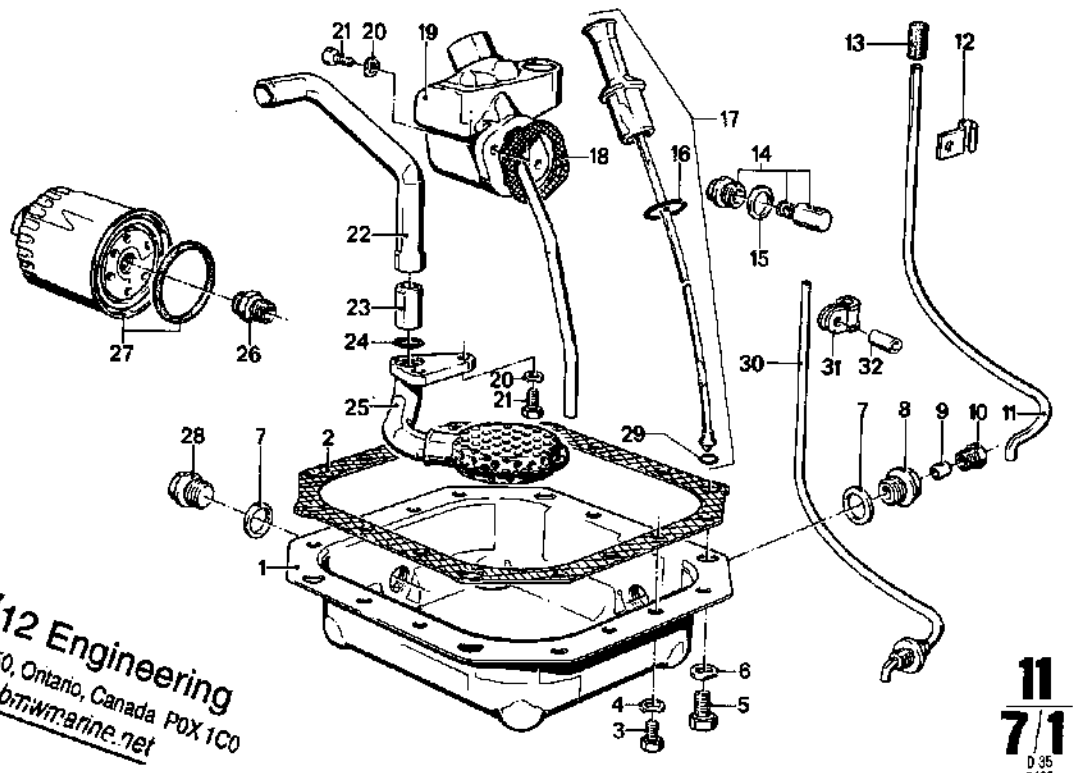


V12 Engineering
Box 50, Ontario, Canada P0X 1C0
www.bmwmarine.net

11
7/1
D 35
2/85

| 11 7/1 2/85 | | | | D 35-1 | D 35-2 | D 50-1 | D 50-2 | |
|---|---|---|---|---|---|---|---|---|
| Nr. | Teile-Nummer | Symbol | Benennung | | | | | Bemerkung |
| 1 | 11 13 1 761 034 | | Ölwanne / Oil pan / Carter d'huile / Oljetråg / Coppa dell'olio | 1 | 1 | | | |
| 2 | 11 13 1 331 814 | | Dichtung / Seal / Garniture / Packning / Guarnizione | 1 | 1 | | | |
| 3 | 07 11 9 913 624 | | 6 KT SHR M 8 × 16 | 12 | 12 | 18 | 18 | |
| 4 | 07 11 9 933 096 | | A 8 Federring / Spring lock washer / Rondelle élastique / Fjäderbricka / Anello elastico | 12 | 12 | 18 | 18 | |
| 5 | 07 11 9 919 925 | | ZYL SHR M 12 × 20 | 4 | 4 | 4 | 4 | |
| 6 | 07 11 9 933 127 | | A 12 Federring / Spring lock washer / Rondelle élastique / Fjäderbricka / Anello elastico | 4 | 4 | 4 | 4 | |
| 7 | 07 11 9 963 354 | | DTRG A 22 | 2 | 2 | 2 | 2 | |
| 8 | 11 13 1 331 358 | | VSL SHR | 1 | 1 | 1 | 1 | |
| 9 | 11 13 1 331 360 | | Doppelkegelring / Double taper ring / Double anneau conque / Dubbelkägelring / Anello a doppio cono | 1 | 1 | 1 | 1 | |
| 10 | 11 13 1 331 359 | | Überwurfschraube / Coupling screw / Vis-raccord / Huvskruv / Vite a capello | 1 | 1 | 1 | 1 | |
| 11 | c 11 13 1 331 356 | | Ölabsaugleitung / Oil drain line / Conduite d'aspiration d'huile / Oljeutsugningsledning / Conduttura di aspirazione dell'olio | 1 | 1 | 1 | 1 | |
| 12 | c 11 13 1 331 357 | | Schelle / Coil clip / Collier / Klammer / Fascetta | 1 | 1 | 1 | 1 | |
| 13 | 11 81 1 271 607 | | Verschlußkappe / Cap / Capuchon / Tillslutningskåpa / Cuffia di chiusura | 1 | 1 | 1 | 1 | |
| 14 | a 11 42 1 333 036 | | Öldruckventil / Oil pressure valve / Soupape de refoulement d'huile / Oljetrycksventil / Valvola pressione olio | 1 | | 1 | | |
| | b 11 42 1 333 143 | | dito | 1 | 1 | 1 | 1 | |
| 15 | 07 11 9 963 308 | | DTRG A 18 × 22 | 1 | 1 | 1 | 1 | |
| 16 | 11 43 1 333 046 | | O-Ring / O-ring / Joint torique / O-ring / Anello-O | 1 | 1 | 1 | 1 | |
| 17 | 11 43 1 333 041 | | Tauchstab / Dipstick / Jauge / Mätsticka / Asta d'immersione | 1 | 1 | 1 | 1 | |
| 18 | 11 43 1 333 054 | | Dichtung / Seal / Garniture / Packning / Guarnizione | 1 | 1 | 1 | 1 | |
| 19 | 11 43 1 333 397 | | Öleinfüllstutzen / Oil filler neck / Tubulure de remplissage d'huile / Oljepåfyllningsstuts / Tubo d. riempimento olio | 1 | 1 | | | |
| 20 | 07 11 9 933 096 | | 8 Federring / Spring lock washer / Rondelle élastique / Fjäderbricka / Anello elastico | 4 | 4 | 4 | 4 | |
| 21 | 07 11 9 919 969 | | ZYL SHR M 8 × 20 | 4 | 4 | 4 | 4 | |
| 22 | 11 11 1 331 784 | | Ölsaugrohr / Oil suction pipe / Tube d'aspiration d'huile / Oljeutsugningsrör / Tubo di aspirazione olio | 1 | 1 | 1 | 1 | |

a) → Mot. Nr. 165 (D 35), 122 (D 50)
b) Mot. Nr. → dito
c) → Mot. Nr. 1029
d) Mot. Nr. → dito

Ölversorgung
Oil supply
Distribution d'huile
Oljeförsörjning
Alimentazione olio

BMW D 35 / D 50

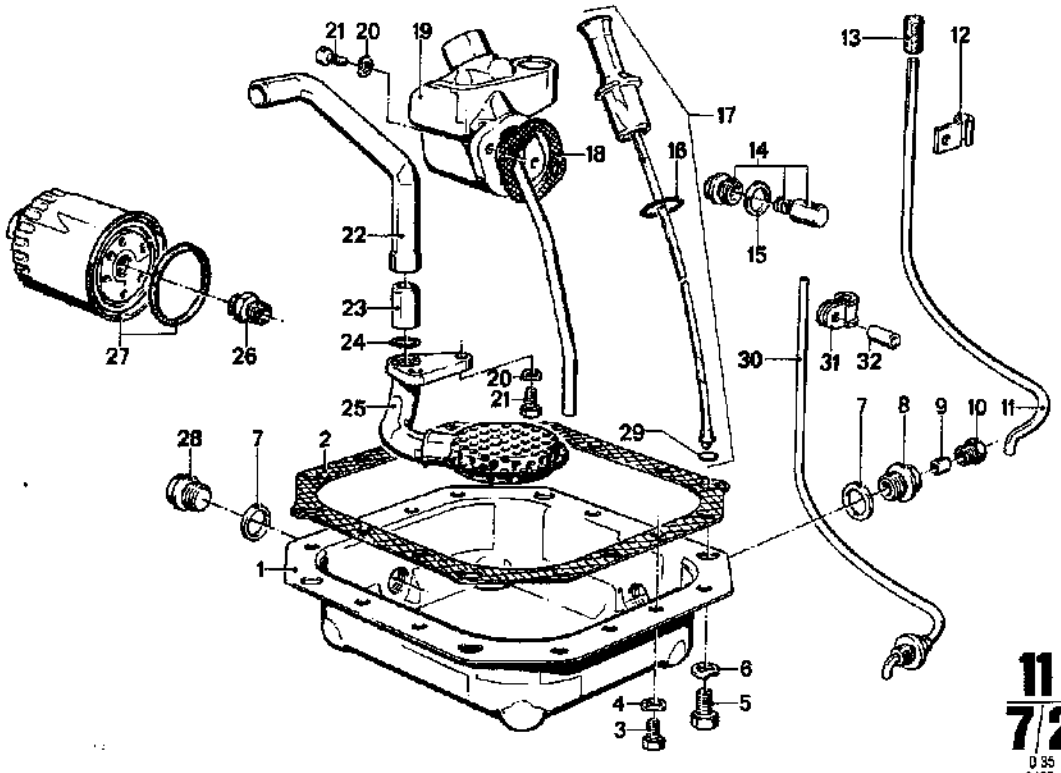


11
7/2
D 35
2/85

| 11 7/2 | 2/85 | | | D 35-1 | D 35-2 | D 50-1 | D 50-2 | | |
|---|---|---|---|---|---|---|---|---|---|
| Nr. | Teile-Nummer | Symbol | Benennung | | | | | | Bemerkung |
| 23 | 11 11 1 331 783 | | Rohrstutzen / Tube adapter / Tubulure / Rörstuts / Bocchettone | 1 | 1 | 1 | 1 | | |
| 24 | 11 32 1 763 378 | | O-Ring / O-ring / Joint torique / O-ring / Anello-O | 1 | 1 | 1 | 1 | | |
| 25 | 11 41 1 333 034 | | Ölsaugleitung / Oil suction line / Conduite d'aspiration d'huile / Sugledningar olja / Conduttura di aspirazione olio | 1 | 1 | | | | |
| 27 | 11 42 1 761 087 | | Wechselpatrone / Replaceable cartridge / Cartouche interchangeable / Växelpatron / Cartuccia intercambiabile | 1 | 1 | 1 | 1 | | |
| 28 | 07 11 9 919 252 | | VSL SHR AM 22 x 1,5 | 1 | 1 | 1 | 1 | | |
| 29 | 11 43 1 763 368 | | O-Ring / O-ring / Joint torique / O-ring / Anello-O | 1 | 1 | 1 | 1 | | |
| 30 | d 11 13 1 761 006 | | Ölabsaugleitung / Oil drain line / Conduite d'aspiration d'huile / Oljeutsugningsledning / Conduttura di aspirazione dell'olio | 1 | 1 | 1 | 1 | | |
| 31 | d 11 13 1 761 023 | | Rohrschelle / Pipe clamp / Bride de tuyau / Rörklämma / Fascetta di tubo | 1 | 1 | 1 | 1 | | |
| 32 | d 12 31 1 329 282 | | Distanzbuchse / Spacer socket / Douille d'écartement / Distanshylsa / Boccola distanziatore | 1 | 1 | 1 | 1 | | |

a) → Mot. Nr. 165 (D 35), 122 (D 50)
b) Mot. Nr. → dito
c) → Mot. Nr. 1029
d) Mot. Nr. → dito

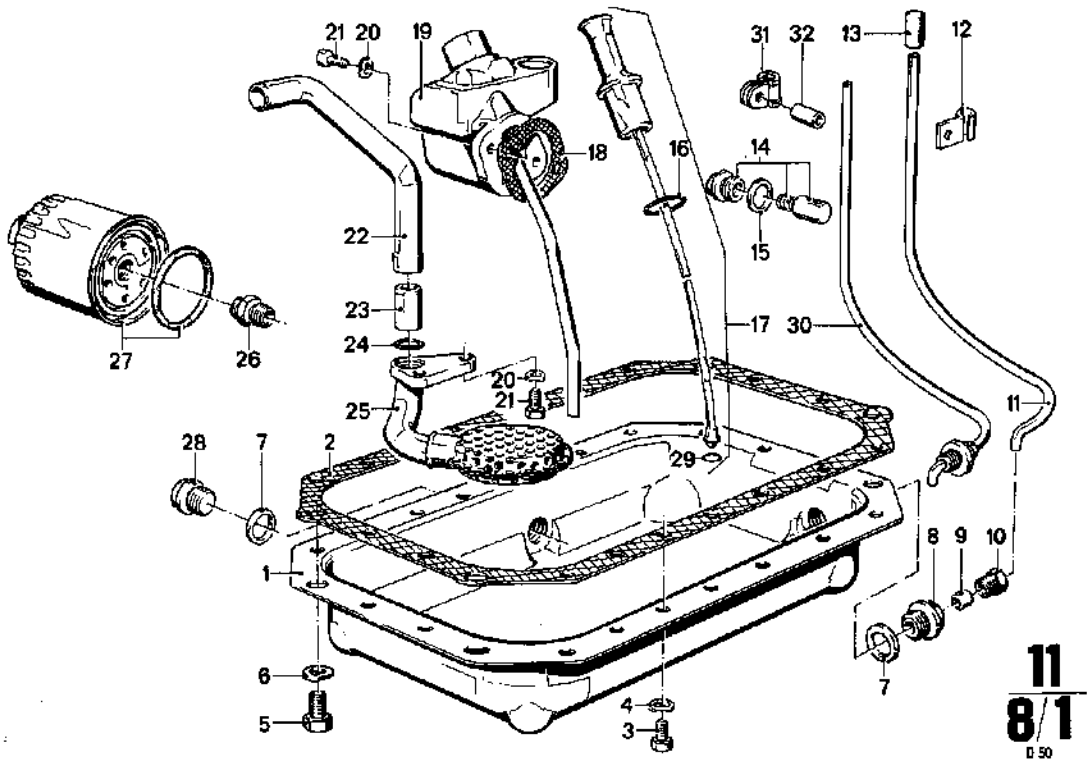


**11 / 8/1**
D 50
2/85

**11 / 8/1** 2/85

| Nr. | Teile-Nummer | Symbol | Benennung | D35–1 | D35–2 | D50–1 | D50–2 | Bemerkung |
|---|---|---|---|---|---|---|---|---|
| 1 | 11 13 1 761 035 | | Ölwanne / Oil pen / Carter d'huile / Oljetråg / Coppa dell'olio | | | 1 | 1 | |
| 2 | 11 13 1 331 815 | | Dichtung / Seal / Garniture / Packning / Guarnizione | | | 1 | 1 | |
| 3 | 07 11 9 913 624 | | 6 KT SHR M 8 × 16 | 12 | 12 | 18 | 18 | |
| 4 | 07 11 9 933 096 | | A 8 Federring / Spring lock washer / Rondelle élastique / Fjäderbricka / Anello elastico | 12 | 12 | 18 | 18 | |
| 5 | 07 11 9 919 925 | | ZYL SHR M 12 × 20 | 4 | 4 | 4 | 4 | |
| 6 | 07 11 9 933 127 | | A 12 Federring / Spring lock washer / Rondelle élastique / Fjäderbricka / Anello elastico | 4 | 4 | 4 | 4 | |
| 7 | 07 11 9 963 354 | | DT RG A 22 | 2 | 2 | 2 | 2 | |
| 8 | 11 13 1 331 358 | | VSL SHR | 1 | 1 | 1 | 1 | |
| 9 | 11 13 1 331 360 | | Doppelkegelring / Double taper ring / Double anneau conque / Dubbelkägelring / Anello a doppio cono | 1 | 1 | 1 | 1 | |
| 10 | 11 13 1 331 359 | | Überwurfschraube / Coupling screw / Vis-raccord / Huvskruv / Vite a capello | 1 | 1 | 1 | 1 | |
| 11 | c 11 13 1 331 356 | | Ölabsaugleitung / Oil drain line / Conduite d'aspiration d'huile / Oljeutsugningsledning / Conduttura di aspirazione dell'olio | 1 | 1 | 1 | 1 | |
| 12 | c 11 13 1 331 357 | | Schelle / Coil clip / Collier / Klammer / Fascetta | 1 | 1 | 1 | 1 | |
| 13 | 11 61 1 271 607 | | Verschlußkappe / Cap / Capuchon / Tillslutningskåpa / Cuffia di chiusura | 1 | 1 | 1 | 1 | |
| 14 | a 11 42 1 333 036 | | Öldruckventil / Oil pressure valve / Soupape de refoulement d'huile / Oljetrycksventil / Valvola pressione olio | 1 | | 1 | | |
| | b 11 42 1 333 143 | | dito | 1 | 1 | 1 | 1 | |
| 15 | 07 11 9 963 308 | | DT RG A 18 × 22 | 1 | 1 | 1 | 1 | |
| 16 | 11 43 1 333 046 | | O-Ring / O-ring / Joint torique / O-ring / Anello-O | 1 | 1 | 1 | 1 | |
| 17 | 11 43 1 333 041 | | Tauchstab / Dipstick / Jauge / Mätsticka / Asta d'immersione | 1 | 1 | 1 | 1 | |
| 18 | 11 43 1 333 054 | | Dichtung / Seal / Garniture / Packning / Guarnizione | 1 | 1 | 1 | 1 | |
| 19 | 11 43 1 333 398 | | Öleinfüllstutzen / Oil filler neck / Tubulure de remplissage d'huile / Oljepåfyllningsstuts / Tubo d. riempimento olio | | | 1 | 1 | |
| 20 | 07 11 9 933 096 | | 8 Federring / Spring lock washer / Rondelle élastique / Fjäderbricka / Anello elastico | 4 | 4 | 4 | 4 | |
| 21 | 07 11 9 919 969 | | ZYL SHR M 8 × 20 | 4 | 4 | 4 | 4 | |
| 22 | 11 11 1 331 784 | | Ölsaugrohr / Oil suction pipe / Tube d'aspiration d'huile / Oljeutsugningsrör / Tubo di aspirazione olio | 1 | 1 | 1 | 1 | |

a) → Mot. Nr. 165 (D 35), 122 (D 50)
b) Mot. Nr. → dito
c) → Mot. Nr. 1029
d) Mot. Nr. → dito

Ölversorgung
Oil supply
Distribution d'huile
Oljeförsörjning
Alimentazione olio

BMW D 35 / D 50

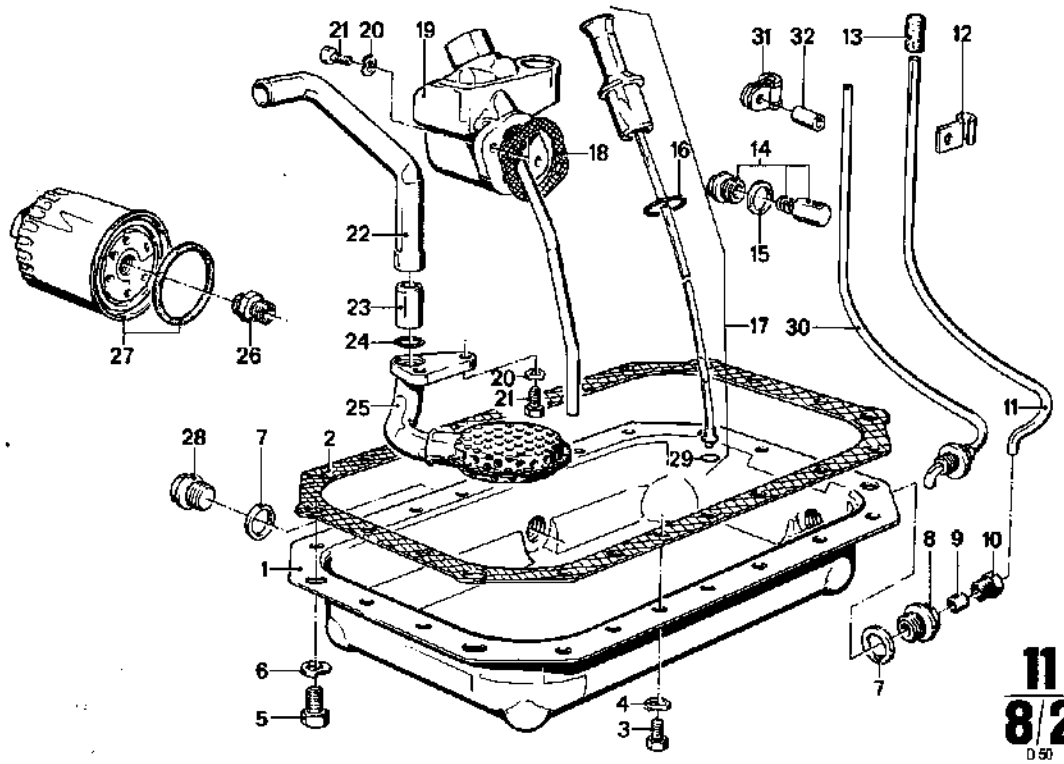


**11**
**8/2**
D 50
2/85

**11 / 8/2** 2/85

| Nr. | Teile-Nummer | Symbol | Benennung | D 35 – 1 | D 35 – 2 | D 50 – 1 | D 50 – 2 | Bemerkung |
|---|---|---|---|---|---|---|---|---|
| 22 | 11 11 1 331 784 | | Ölsaugrohr / Oil suction pipe / Tube d'aspiration d'huile / Oljeutsugningsrör / Tubo di aspirazione olio | 1 | 1 | 1 | 1 | |
| 23 | 11 11 1 331 783 | | Rohrstutzen / Tube adapter / Tubulure / Rörstuts / Bocchettone | 1 | 1 | 1 | 1 | |
| 24 | 11 32 1 763 378 | | O-Ring / O-ring / Joint torique / O-ring / Anello-O | 1 | 1 | 1 | 1 | |
| 25 | 11 41 1 333 033 | | Ölsaugleitung / Oil suction line / Conduite d'aspiration d'huile / Sugledningar olja / Conduttura di espirazione olio | | | 1 | 1 | |
| 27 | 11 42 1 761 087 | | Wechselpatrone / Replaceable cartridge / Cartouche interchangeable / Växelpatron / Cartuccia intercambiabile | 1 | 1 | 1 | 1 | |
| 26 | 07 11 9 919 252 | | VSL SHR AM 22 | 1 | 1 | 1 | 1 | |
| 29 | 11 43 1 763 368 | | O-Ring / O-ring / Joint torique / O-ring / Anello-O | 1 | 1 | 1 | 1 | |
| 30 | d 11 13 1 761 006 | | Ölabsaugleitung / Oil drain line / Conduite d'aspiration d'huile / Oljeutsugningsledning / Conduttura di aspirazione dell'olio | 1 | 1 | 1 | 1 | |
| 31 | d 11 13 1 761 023 | | Rohrschelle / Pipe clamp / Bride de tuyau / Rörklämma / Fascetta di tubo | 1 | 1 | 1 | 1 | |
| 32 | d 12 31 1 329 282 | | Distanzstück / Spacer / Pièce d'écartement / Distansstycke / Pezzo distanziatore | 1 | 1 | 1 | 1 | |

a) → Mot. Nr. 165 (D 35), 122 (D 50)
b) Mot. Nr. → dito
c) → Mot. Nr. 1029
d) Mot. Nr. → dito

Steuerdeckel
Timing case cover
Couvercle de distribution
Styrningslock
Coperchio di distribuzione

BMW D 35 / D 50

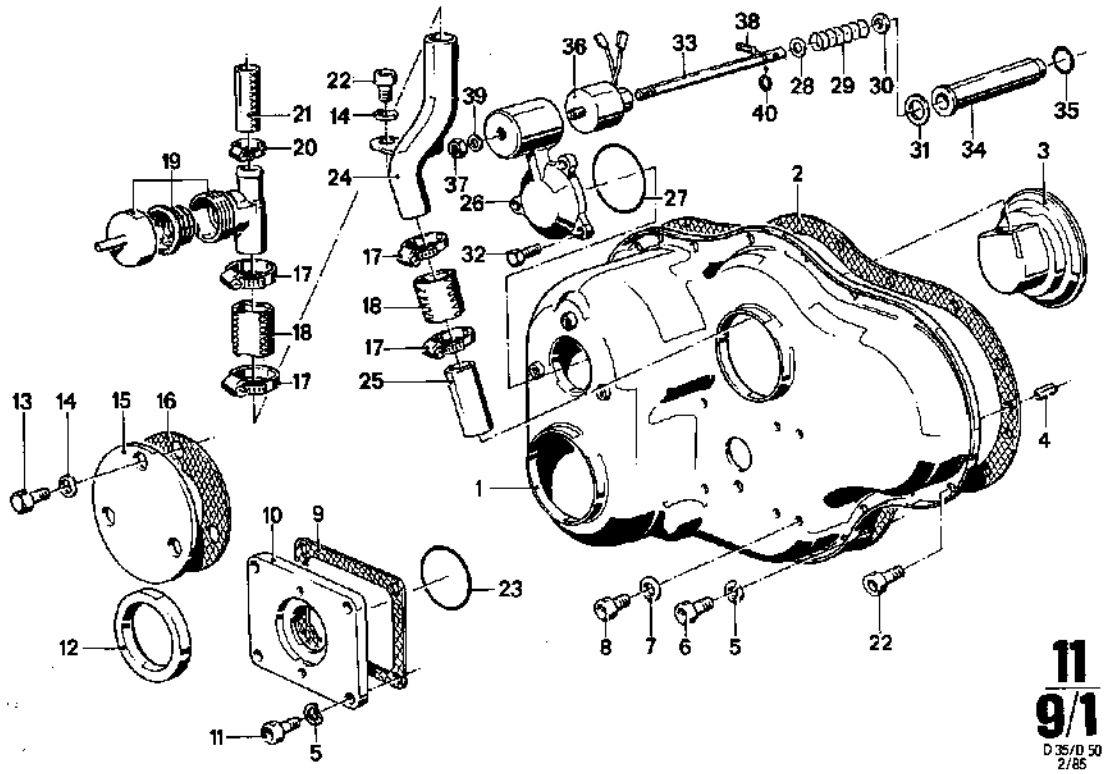


**11**
**9/1**
D 35/D 50
2/85

| 11 / 9/1 | 2/85 | | | D 35–1 | D 35–2 | D 50–1 | D 50–2 | |
|---|---|---|---|---|---|---|---|---|
| Nr. | Teile-Nummer | Symbol | Benennung | | | | | Bemerkung |
| 1 | 11 14 1 763 367 | | Steuerdeckel / Timing case cover / Couvercle de distribution / Styrningslock / Coperchio di distribuzione | 1 | 1 | 1 | 1 | |
| 2 | 11 14 1 331 825 | | Dichtung / Seal / Garniture / Packning / Guarnizione | 1 | 1 | 1 | 1 | |
| 3 | 11 14 1 331 821 | | Einsatz / Filter element / Cartouche filtrante / Filterinsats / Elemento amovibile | 1 | 1 | 1 | 1 | |
| 4 | 07 11 9 941 416 | | 8 x 40 Spannstift / Tightening pin / Goupille / Spännstift / Perno tenditore di fissaggio | 2 | 2 | 2 | 2 | |
| 5 | 07 11 9 933 096 | | 8 Federring / Spring lock washer / Rondelle élastique / Fjäderbricka / Anello elastico | 26 | 26 | 26 | 26 | |
| 6 | 07 11 9 919 939 | | ZYL SHR 8 x 16 | 18 | 18 | 18 | 18 | |
| 7 | 07 11 9 963 042 | | DTRG A 8 x 11,5 | 2 | | 2 | | |
| 8 | 07 11 9 918 849 | | ZYL SHR M 8 x 10 | 2 | | 2 | | |
| 9 | 11 14 1 331 824 | WW | Dichtung / Seal / Garniture / Packning / Guarnizione | 1 | | 1 | | |
| 10 | 11 14 1 331 823 | | Flansch / Flange / Bride / Fläns / Flangia | 1 | 1 | 1 | 1 | |
| 11 | 07 11 9 919 978 | | ZYL SHR M 8 x 25 | 4 | 4 | 4 | 4 | |
| 12 | 11 14 1 331 818 | | Wellendichtring / Shaft seal / Bague d'étanchéité radiale / Tätningsring, axel / Anello di tenuta | 1 | 1 | 1 | 1 | |
| 13 | 07 11 9 913 616 | | ZYL SHR M 8 x 12 | 3 | 3 | 3 | 3 | |
| 14 | 07 11 9 932 081 | | 8 Federscheibe / Spring washer / Rondelle élastique / Fjäderbricka / Rosetta elastica | 3 | 5 | 3 | 5 | |
| 15 | 11 14 1 331 819 | | Deckel / Cover / Couvercle / Lock / Coperchio | 1 | | 1 | | |
| 16 | 11 14 1 331 820 | | Dichtung / Seal / Garniture / Packning / Guarnizione | 1 | | 1 | | |
| 17 | 07 12 9 952 111 | | 20–32 Schelle / Coil clip / Collier / Klammer / Fascetta | 4 | 4 | 4 | 4 | |
| 18 | 11 15 1 333 003 | | Schlauch / Hose / Flexible / Slang / Tubo flessibile | 2 | 2 | 2 | 2 | |
| 19 | 11 15 1 333 008 | | Entlüftungsventil / Bleed valve / Soupape de purge / Luftningsventil / Valvole spurgo dria | 1 | 1 | 1 | 1 | |
| 20 | 07 12 9 952 104 | | 11–16 Schelle / Coil clip / Collier / Klammer / Fascetta | 1 | 1 | 1 | 1 | |
| 21 | 11 15 1 333 004 | | Schlauch / Hose / Flexible / Slang / Tubo flessibile | 1 | 1 | 1 | 1 | |
| 22 | 07 11 9 919 694 | | ZYL SHR M 8 x 12 | 5 | 5 | 5 | 5 | |
| 23 | 11 14 1 333 291 | WW | O-Ring / O-ring / Joint torique / O-ring / Anello-O | 1 | 1 | 1 | 1 | |
| 24 | 11 15 1 333 005 | | Rohrbogen / Pipe bend / Coude de tuyau / Rörkrök / Tubo a gomito | 1 | 1 | 1 | 1 | |
| 25 | 11 14 1 331 822 | | Rohr / tube / Tuyau / Rör / Tubo | 1 | 1 | 1 | 1 | |
| 26 | 11 14 1 333 782 | | Deckel / Cover / Couvercle / Lock / Coperchio | 1 | 1 | 1 | 1 | |

V12 Engineering
Box 50, Ontario, Canada P0X 1C0
www.bmwmarine.net

Steuerdeckel
Timing case cover
Couvercle de distribution
Styrningslock
Coperchio di distribuzione



V12 Engineering
Box 50, Ontario, Canada P0X 1C0
www.bmwmarine.net

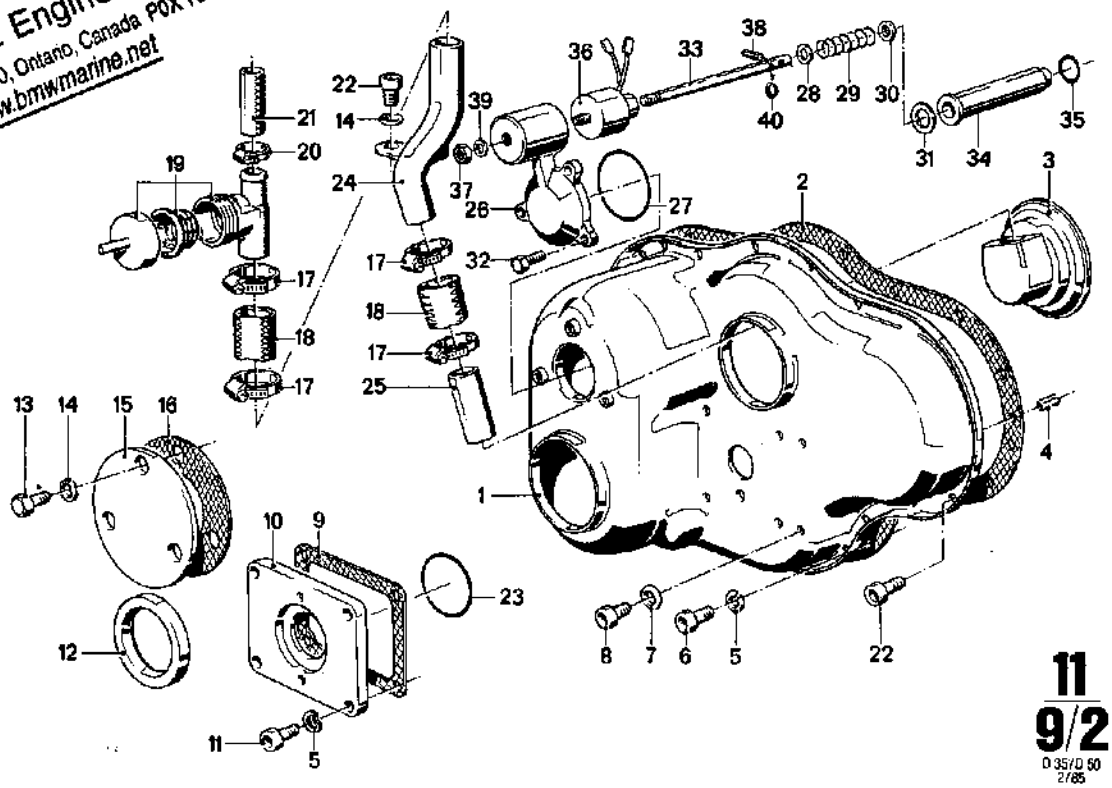


**11**
**9/2**
D 35/D 50
2/85

**11 9/2** 2/85

| Nr. | Teile-Nummer | Symbol | Benennung | D 35–1 | D 35–2 | D 50–1 | D 50–2 | Bemerkung |
|---|---|---|---|---|---|---|---|---|
| 27 | 11 14 1 761 131 | | O-Ring / O-ring / Joint torique / O-ring / Anello-O | | 1 | | 1 | |
| 28 | 11 14 1 333 785 | | Scheibe / Washer / Rondelle / Bricka / Rondella | 1 | 1 | 1 | 1 | |
| 29 | 11 14 1 333 786 | | Druckfeder / Compression spring / Ressort de pression / Tryckfjäder / Molla di compressione | 1 | 1 | 1 | 1 | |
| 30 | 11 14 1 333 787 | | Scheibe / Washer / Rondelle / Bricka / Rondella | 1 | 1 | 1 | 1 | |
| 31 | 13 51 1 761 132 | | O-Ring / O-ring / Joint torique / O-ring / Anello-O | 1 | 1 | 1 | 1 | |
| 32 | 07 11 9 913 624 | | 6 KT SHR M 8 × 16 | 3 | 3 | 3 | 3 | |
| 33 | 13 41 1 333 779 | | Zugstange / Traction rod / Barre d'attelage / Dragstång / Tirante | 1 | 1 | 1 | 1 | |
| 34 | 13 41 1 333 783 | | Schutzrohr / Protective tube / Tube protecteur / Skyddsrör / Tubo di protezione | 1 | 1 | 1 | 1 | |
| 35 | 13 41 1 761 138 | | O-Ring / O-ring / Joint torique / O-ring / Anello-O | 1 | 1 | 1 | 1 | |
| 36 | 12 14 1 333 921 | | Hubmagnet / Lifting magnet / Aimant de levage / Lyftmagnet / Magnete di sollevamento | 1 | 1 | 1 | 1 | |
| 37 | 07 11 9 922 087 | | 6 KT MU | 1 | 1 | 1 | 1 | |
| 38 | 07 11 9 941 304 | | 2,5 × 10 Spannstift / Spring dowel sleeve / Goupille de serrage / Spännstift / Perno tenditore di fissaggio | 1 | 1 | 1 | 1 | |
| 39 | 07 11 9 931 067 | | 8,4 Scheibe / Washer / Rondelle / Bricka / Rondella | 1 | 1 | 1 | 1 | |
| 40 | 07 11 9 934 035 | | Sicherungsring / Snap ring / Circlip / Låsring / Anello di sicurezza | 1 | 1 | 1 | 1 | |

Kurbelwelle, Schwungrad
Crankshaft, Flywheel
Vilebrequin, Volant du moteur
Vevaxel, Svånghjul
Albero a gomiti



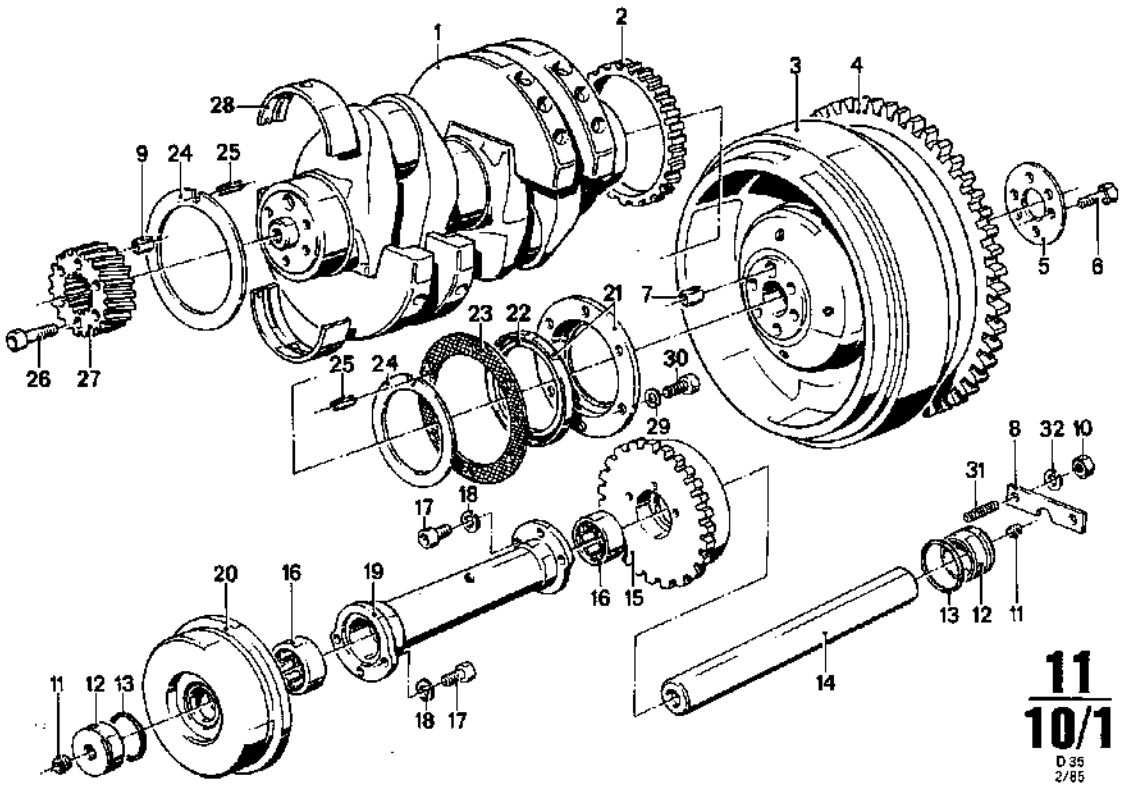


**11/10/1**
D 35
2/85

| 11/10/1 | 2/85 | | | D 35–1 | D 35–2 | D 50–1 | D 50–2 | | |
|---|---|---|---|---|---|---|---|---|---|
| Nr. | Teile-Nummer | Symbol | Benennung | | | | | | Bemerkung |
| 1 | 11 21 1 331 834 | | Kurbelwelle / Crankshaft / Vilebrequin / Vevaxel / Albero a gomiti | | 1 | 1 | | | |
| 2 | 11 27 1 331 870 | | Zahnrad / Toothed wheel / Roue dentée / Kugghjul / Ruota dentata | | 1 | 1 | 1 | 1 | |
| 3 | 11 22 1 329 046 | | Schwungrad / Flywheel / Volant du moteur / Svånghjul / Volans | | 1 | 1 | 1 | 1 | |
| 4 | 11 22 1 329 038 | | Zahnkranz/ Ring gear / Couronne dentée / Kuggkrans / Corona dentata | | 1 | 1 | 1 | 1 | |
| 5 | 11 22 1 329 433 | | Scheibe / Washer / Rondelle / Bricka / Rondella | | 1 | 1 | 1 | 1 | |
| 6 | 07 11 9 913 904 | | 6 KT SHR M 12 × 45 | | 6 | 6 | 6 | 6 | |
| 7 | 11 22 1 329 432 | | Scherbüchse / Shear bushing / Douille de cisaillement / Saxbussning / Bussola di sicurezza | | 1 | 1 | 1 | 1 | |
| 8 | 11 27 1 331 869 | | Lasche / Shackle / Attache / Länk / Biscottino | | 1 | 1 | 1 | 1 | |
| 9 | 07 11 9 941 496 | | Spannstift / Spring dowel sleeve / Goupille de serrage / Spännstift / Perno tenditore di fissaggio | | 1 | 1 | 1 | 1 | |
| 10 | 07 11 9 922 078 | | 6 KT MU M 8 | | 2 | 2 | 2 | 2 | |
| 11 | 07 11 9 919 004 | | VSL SHR M 10 × 1 | | 2 | 2 | 2 | 2 | |
| 12 | 11 27 1 331 867 | | Anlaufbüchse / Check bushing / Douille de butée / Starterbussning / Bussola di avviamento | | 2 | 2 | 2 | 2 | |
| 13 | 11 27 1 331 868 | | 33,3 O-Ring / O-ring / Joint torique / O-ring / Anello-O | | 2 | 2 | 2 | 2 | |
| 14 | 11 27 1 331 866 | | Welle / Shaft / Arbre / Axel / Albero | | 1 | 1 | | | |
| 15 | 11 27 1 331 859 | | Zahnrad mit Unwucht / Gearwheel with imbalance / Pignon avec balourd / Kugghjul med motvikt / Ruota dentata con sbilanciamento | | 1 | 1 | 1 | 1 | |
| 16 | 11 27 1 331 864 | | Nadellager / Needle bearing / Roulement à aiguilles / Nållager / Cuscinetto a aghi | | 2 | 2 | 2 | 2 | |
| 17 | 07 11 9 919 728 | | ZYL SHR M 8 × 20 | | 6 | 6 | 6 | 6 | |
| 18 | 07 11 9 933 096 | | 8 Federring / Spring lock washer / Rondelle élastique / Fjäderbricka / Anello elastico | | 8 | 8 | 8 | 8 | |
| 19 | 11 27 1 331 862 | | Mitnehmer / Driving dog / Entraineur / Medbringare / Transcinatore | | 1 | 1 | 1 | 1 | |
| 20 | 11 27 1 331 856 | | Unwucht / Imbalance / Balourd / Motvikt / Sbilanciamento | | 1 | 1 | 1 | 1 | |
| 21 | 11 141 763 366 | | Abschlußdeckel / End cover / Couvercle de fermeture / Lock / Coperchio di chiusura | | 1 | 1 | 1 | 1 | |
| 22 | 11 14 1 331 828 | | Wellendichtring / Shaft seal / Bague d'étanchéité radiale / Tätningsring, axel / Anello di tenuta | | 1 | 1 | 1 | 1 | |
| 23 | 11 14 1 331 827 | | Dichtung / Seal / Garniture / Packning / Guarnizione | | 1 | 1 | 1 | 1 | |

V12 Engineering
Box 50, Ontario, Canada P0X 1G0
www.bmwmarine.net

Kurbelwelle, Schwungrad
Crankshaft, Flywheel
Vilebrequin, Volant du moteur
Vevaxel, Svånghjul
Albero a gomiti



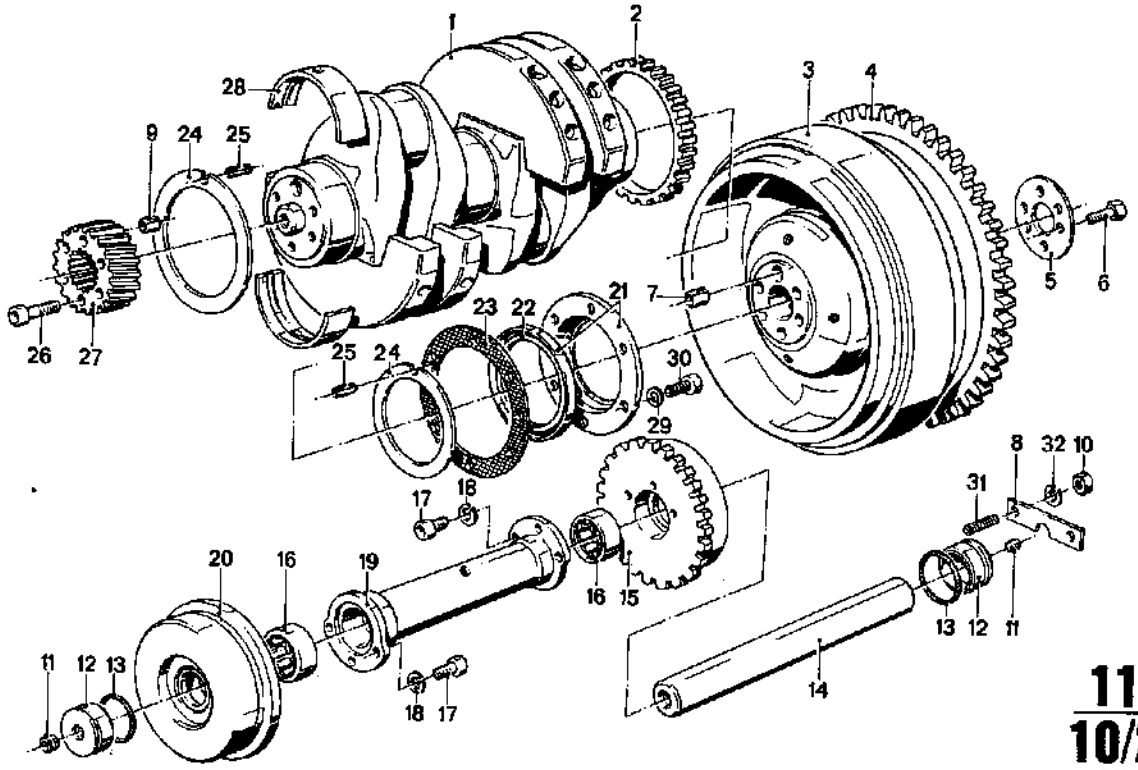


**11 / 10/2**
D35
2/85

| 11 / 10/2 2/85 | | | | D35-1 | D35-2 | D50-1 | D50-2 | | |
|---|---|---|---|---|---|---|---|---|---|
| Nr. | Teile-Nummer | Symbol | Benennung | | | | | | Bemerkung |
| 24 | 11211333829 | | Anlaufscheibe / Thrust washer / rondelle d'entraînem. / Passbricka / Rosetta di erresto | 2 | 2 | 2 | 2 | | |
| 25 | 07119941393 | | 5 x 24 Spannhülse / Clamping sleeve / Douille de serrage / Spännhylsa / Boccola a tache | 2 | 2 | 2 | 2 | | |
| 26 | 07119919601 | | ZYL SHR M 8 x 40 | 6 | 6 | 6 | 6 | | |
| 27 | 11211331839 | | Zahnrad / Toothed wheel / Roue dentée / Kugghjul / Ruota dentata | 1 | 1 | 1 | 1 | | |
| 28 | 11211331830 | | normal – Hauptlager / Main wheel / Roue dentée / Kugghjul / Cuscinetto di banco | 3 | 3 | 4 | 4 | | |
| 28 | 11211333250 | | –0,5 Hauptlager / Main bearing / Palier principal / Ramlager / Cuscinetto di banco | 3 | 3 | 4 | 4 | | |
| 29 | 07119932062 | | A 6 Federscheibe / Spring washer / Rondelle / Fjäderbricka / Rosetta elastica | 6 | 6 | 6 | 6 | | |
| 30 | 07119919965 | | ZYL SHR M 6 x 16 | 6 | 6 | 6 | 6 | | |
| 31 | 07119909452 | | STI SHR M 8 x 12 | 2 | 2 | 2 | 2 | | |
| 32 | 07119930840 | | Federring / Spring lock washer / Rondelle élastique / Fjäderbricka / Anello elastico | 2 | 2 | 2 | 2 | | |

Kurbelwelle, Schwungrad
Crankshaft, Flywheel
Vilebrequin, Volant du moteur
Vevaxel, Svånghjul
Albero a gomiti

BMW D 35 / D 50

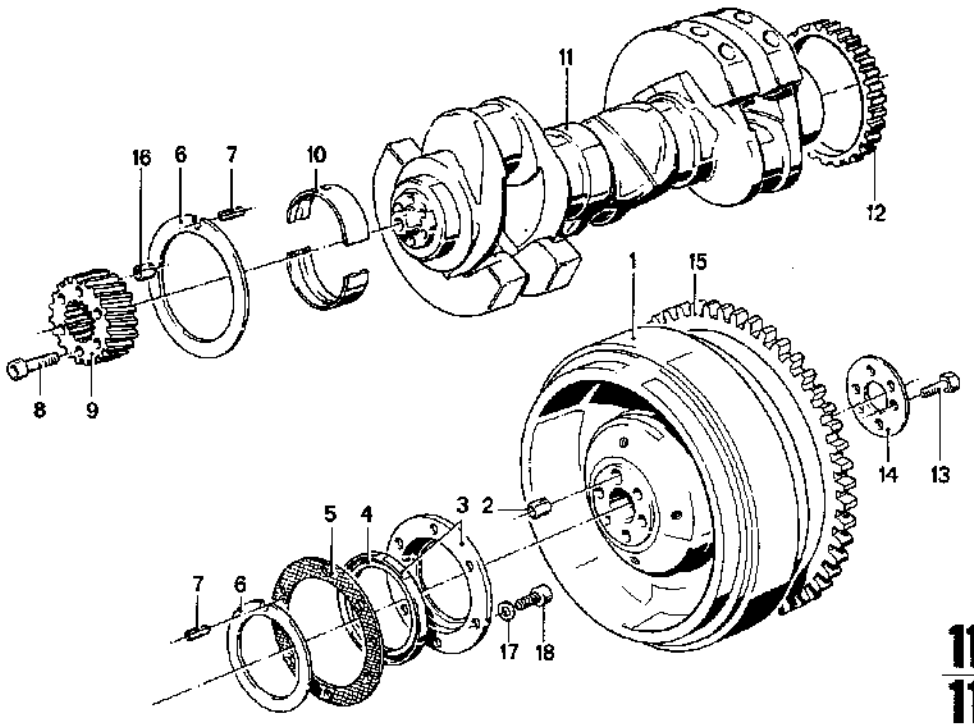


**11**
**11**
D 50
2/85

**11 11** 2/85

| Nr. | Teile-Nummer | Symbol | Benennung | D 35 – 1 | D 35 – 2 | D 50 – 1 | D 50 – 2 | Bemerkung |
|---|---|---|---|---|---|---|---|---|
| 1 | 11 22 1 329 046 | | Schwungrad / Flywheel / Volant du moteur / Svånghjul / Volans | 1 | 1 | 1 | 1 | |
| 2 | 11 22 1 329 432 | | Scherbüchse / Shear bushing / Douille de cisaillement / Saxbussning / Bussola di sicurezza | 1 | 1 | 1 | 1 | |
| 3 | 11 14 1 763 366 | | Abschlußdeckel / End cover / Couvercle de fermeture / Lock / Coperchio di chiusura | 1 | 1 | 1 | 1 | |
| 4 | 11 14 1 331 828 | | Wellendichtring / Shaft seal / Bague d'étanchéité radiale / Tätningsring, axel / Anello di tenuta | 1 | 1 | 1 | 1 | |
| 5 | 11 14 1 331 827 | | Dichtung / Seal / Garniture / Packning / Guarnizione | 1 | 1 | 1 | 1 | |
| 6 | 11 21 1 333 829 | | Anlaufscheibe / Thrust washer / Rondelle d'entrainem. / Passbricka / Rosetta di arresto | 2 | 2 | 2 | 2 | |
| 7 | 07 11 9 941 393 | | 5 × 24 Spannhülse / Clamping sleeve / Douille de serrage / Spännhylsa / Boccola a tacche | 2 | 2 | 2 | 2 | |
| 8 | 07 11 9 919 601 | | ZYL SHR M 8 × 40 | 6 | 6 | 6 | 6 | |
| 9 | 11 21 1 331 839 | | Zahnrad / Toothed wheel / Roue dentée / Kugghjul / Ruota dentata | 1 | 1 | 1 | 1 | |
| 10 | 11 21 1 331 830 | | normal – Hauptlager / Main bearing / Palier principal / Ramlager / Cuscinetto di banco | 3 | 3 | 4 | 4 | |
| | 11 21 1 333 250 | | –0,5 Hauptlager / Main bearing / Palier principal / Ramlager / Cuscinetto di banco | 3 | 3 | 4 | 4 | |
| 11 | 11 21 1 331 833 | | Kurbelwelle / Crankshaft / Vilebrequin / Vevaxel / Albero a gomiti | | | 1 | 1 | |
| 12 | 11 27 1 331 870 | | Zahnrad / Toothed wheel / Roue dentée / Kugghjul / Ruota dentata | 1 | 1 | 1 | 1 | |
| 13 | 07 11 9 913 904 | | 6 KT SHR M 12 × 45 | 6 | 6 | 6 | 6 | |
| 14 | 11 22 1 329 433 | | Scheibe / Washer / Rondelle / Bricka / Rondella | 1 | 1 | 1 | 1 | |
| 15 | 11 22 1 329 038 | | Zahnrad / Toothed wheel / Roue dentée / Kugghjul / Ruota dentata | 1 | 1 | 1 | 1 | |
| 16 | 07 11 9 941 496 | | Spannstift / Spring dowel sleeve / Goupille de serrage / Spännstift / Perno tenditore di fissaggio | 1 | 1 | 1 | 1 | |
| 17 | 07 11 9 932 062 | | A 6 Federscheibe / Spring washer / Rondelle élastique / Fjäderbricka / Rosetta elastica | 6 | 6 | 6 | 6 | |
| 18 | 07 11 9 919 965 | | ZYL SHR M 6 × 16 | 6 | 6 | 6 | 6 | |

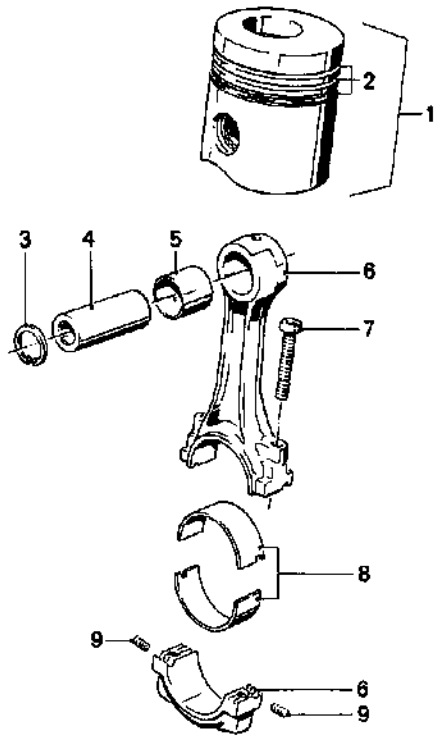


**11/12**
D 35/D 50
2/85

**11/12** 2/85

| Nr. | Teile-Nummer | Symbol | Benennung | D 35–1 | D 35–2 | D 50–1 | D 50–2 | Bemerkung |
|---|---|---|---|---|---|---|---|---|
| 1 | 11 25 1 331 846 | | Ø 95,00 kpl. Kolben / Piston / Piston / Kolv / Pistone | 2 | 2 | 3 | 3 | |
| | 11 26 1 333 135 | RS | Ø 96,00 kpl. Kolben / Piston / Piston / Kolv / Pistone | 2 | 2 | 3 | 3 | |
| 2 | 11 25 1 331 848 | | Ø 95,00 Kolbenringe / Pisto ring / Segment de piston / Kolvring / Segmento di pistone | 2 | 2 | 3 | 3 | |
| | 11 25 1 333 137 | RS | Ø 96,00 Kolbenringe / Piston ring / Segment de piston / Kolvring / Segmento di pistone | 2 | 2 | 3 | 3 | |
| 3 | 07 11 9 934 650 | | Sicherungsring / Snap ring / Circlip / Låsring / Anello di sicurezza | 4 | 4 | 6 | 6 | |
| 4 | 11 25 1 331 852 | | Kolbenbolzen / Piston pin / Axe de piston / Kolvtapp / Spinotto del pistone | 2 | 2 | 3 | 3 | |
| 5 | 11 24 1 333 145 | | Lagerbuchse / Bearing bush / Coussinet / Lagerbussning / Boccola di supporto | 2 | 2 | 3 | 3 | |
| 6 | 11 24 1 331 841 | | kpl. Pleuelstange / Connecting rod / Bielle / Vevstake / Biella | 2 | 2 | 3 | 3 | |
| 7 | 11 24 1 331 844 | | Pleuelschraube / Connecting rod bolt / Boulon de bielle / Vevstaksbult / Bullone di biella | 4 | 4 | 6 | 6 | |
| 8 | 11 24 1 331 845 | | normal – Pleuellager / Connecting rod bearing / Roulement de bielle / Vevstakslager / Bronzina di biella | 2 | 2 | 3 | 3 | |
| | 11 24 1 333 134 | | –0,5 dito | 2 | 2 | 3 | 3 | |
| 9 | 07 11 9 942 034 | | ZYLSTI | 4 | 4 | 6 | 6 | |

**Nockenwelle**
**Camshaft**
**Arbre à cames**
**Kamaxel**
**Albero a camme**

BMW D 35 / D 50

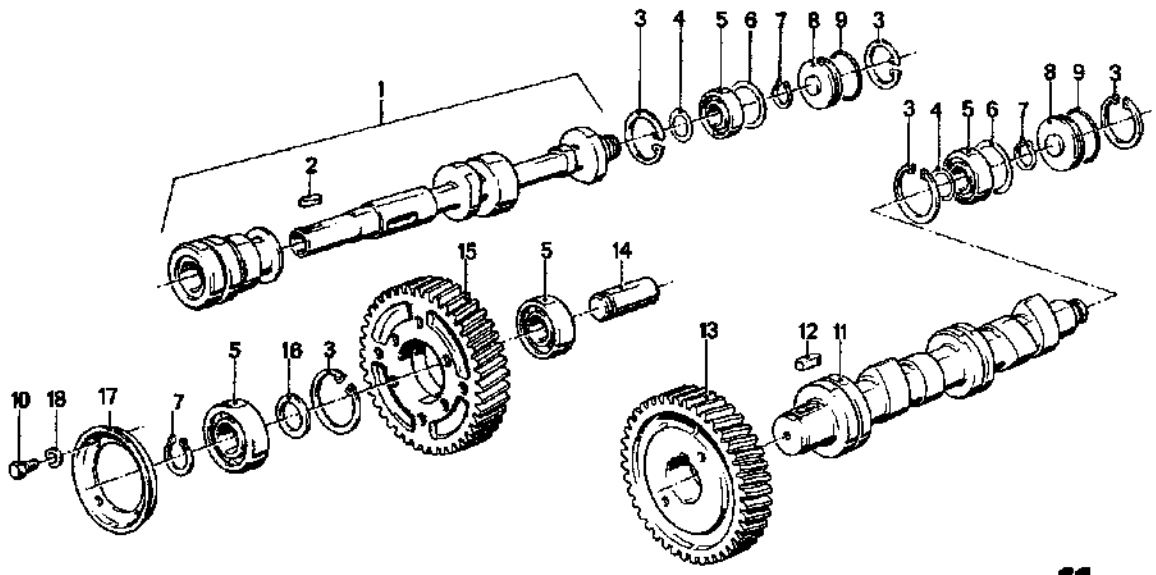


**11**
**13**
D 35
2/85

| 11/13 2/85 | | | | D35–1 | D35–2 | D50–1 | D50–2 | | |
|---|---|---|---|---|---|---|---|---|---|
| Nr. | Teile-Nummer | Symbol | Benennung | | | | | | Bemerkung |
| 1 | 13 41 1 333 077 | | Nockenwelle / Camshaft / Arbre à cames / Kamaxel / Albero a camme | 1 | 1 | | | | |
| 2 | 07 11 9 951 040 | | Paßfeder / Feather key / Ressort d'ajustage / Passkil / Chiavetta a molla d'adattam. | 1 | 1 | 1 | 1 | | |
| 3 | 07 11 9 934 719 | | 47 × 1,75 Sicherungsring / Snap ring / Circlip / Låsring / Anello di sicurezza | 5 | 5 | 5 | 5 | | |
| 4 | 07 11 9 932 652 | | Paßscheibe / Spacer shim / Disque d'ajustem. / Passbricka / Disco di aggiustaggio | X | X | X | X | | |
| 5 | 11 27 1 331 873 | | Lager / Bearing / Palier / Lager / Supporto | 4 | 4 | 4 | 4 | | |
| 6 | 11 11 1 331 773 | | 0,1 Paßscheibe / Spacer shim / Disque d'ajustem. / Passbricka / Disco di aggiustaggio | X | X | X | X | | |
| 7 | 07 11 9 934 133 | | 20 × 1,75 Sicherungsring / Snap ring / Circlip / Låsring / Anello di sicurezza | 3 | 3 | 3 | 3 | | |
| 8 | 11 11 1 331 771 | | Deckel / Cover / Couvercle / Lock / Coperchio | 2 | 2 | 2 | 2 | | |
| 9 | 11 11 1 331 772 | | 42 O-Ring / O-ring / Joint torique / O-ring / Anello-O | 2 | 2 | 2 | 2 | | |
| 10 | 07 11 9 913 218 | | 8 KT SHR M 5 × 10 | 4 | 4 | 4 | 4 | | |
| 11 | 11 31 1 331 881 | | Nockenwelle / Camshaft / Arbre à cames / Kamaxel / Albero a camme | 1 | 1 | | | | |
| 12 | 07 11 9 951 077 | | Paßfeder / Feather key / Ressort d'ajustage / Passkil / Chiavetta a molla d'adattam. | 1 | 1 | 1 | 1 | | |
| 13 | 11 31 1 331 882 | | Zahnrad / Toothed wheel / Roue dentée / Kugghjul / Ruota dentata | 1 | 1 | 1 | 1 | | |
| 14 | 11 27 1 331 872 | | Achse / Pivot / Essieu / Axel / Asse | 1 | 1 | 1 | 1 | | |
| 15 | 11 27 1 763 483 | | Zwischenrad / Intermediate gear / Roue intermédiaire / Mellanhjul / Ruota intermedia | 1 | 1 | 1 | 1 | | |
| 16 | 11 27 1 331 874 | | Distanzring / Spacer ring / Rondelle d'ecartem. / Distansbricka / Anello distanziatore | 1 | 1 | 1 | 1 | | |
| 17 | 11 27 1 331 875 | | Spritzblech / Splash plate / Déflecteur / Stänkbleck / Deflettore | 1 | 1 | 1 | 1 | | |
| 18 | 07 11 9 933 050 | | 5 Federring / Spring lock washer / Rondelle élastique / Fjäderbricka / Anello elastico | 4 | 4 | 4 | 4 | | |

V12 Engineering
Box 50, Ontario, Canada P0X 1C0
www.bmwmarine.net

Nockenwelle
Camshaft
Arbre à cames
Kamaxel
Albero a camme

BMW D 35 / D 50

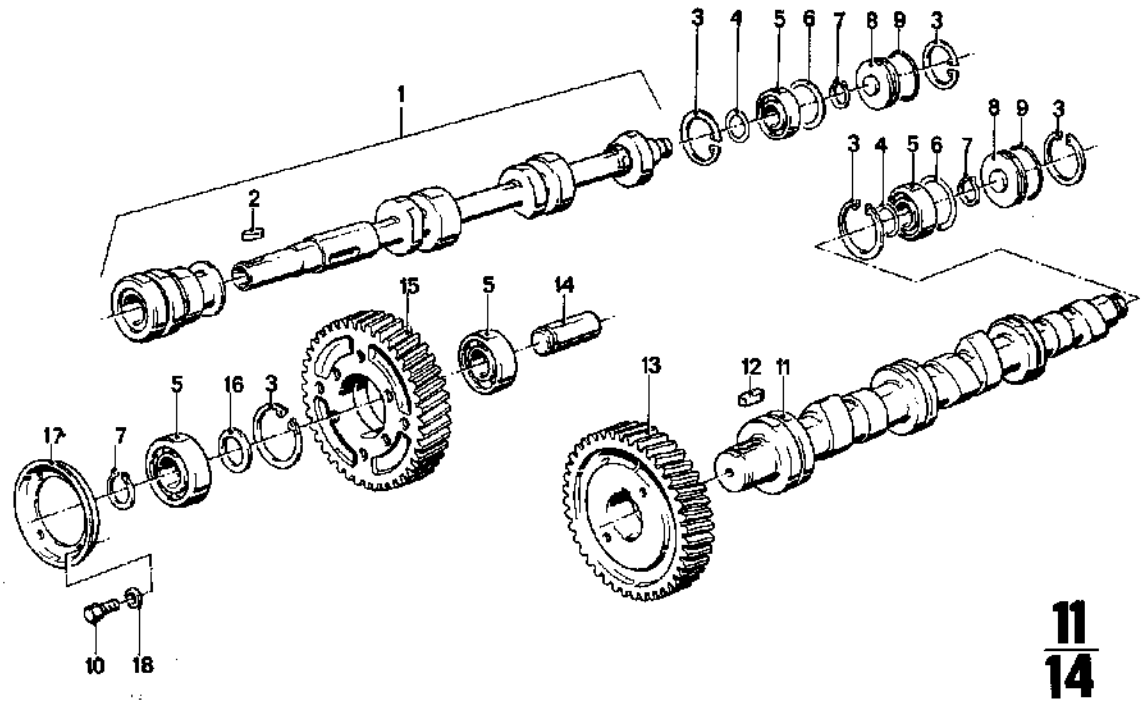


**11/14**
D 50
2/86

**11/14** 2/86

| Nr. | Teile-Nummer | Symbol | Benennung | D 35-1 | D 35-2 | D 50-1 | D 50-2 | Bemerkung |
|---|---|---|---|---|---|---|---|---|
| 1 | 13 41 1 333 076 | | Nockenwelle / Camshaft / Arbre à cames / Kamaxel / Albero a camme | | | 1 | 1 | |
| 2 | 07 11 9 951 040 | | Paßfeder / Feather key / Ressort d'ajustage / Passkil / Chiavetta a molla d'adattam. | 1 | 1 | 1 | 1 | |
| 3 | 07 11 9 934 719 | | 47 × 1,75 Sicherungsring / Snap ring / Circlip / Låsring / Anello di sicurezza | 5 | 5 | 5 | 5 | |
| 4 | 07 11 9 932 652 | | Paßscheibe / Spacer shim / Disque d'ajustem. / Passbricka / Disco di aggiustaggio | X | X | X | X | |
| 5 | 11 27 1 331 873 | | Lager / Bearing / Palier / Lager / Supporto | 4 | 4 | 4 | 4 | |
| 6 | 11 11 1 331 773 | | 0,1 Paßscheibe / Spacer shim / Disque d'ajustem. / Passbricka / Disco di aggiustagio | X | X | X | X | |
| 7 | 07 11 9 934 133 | | 20 × 1,75 Sicherungsring / Snap ring / Circlip / Låsring / Anello di sicurezza | 3 | 3 | 3 | 3 | |
| 8 | 11 11 1 331 771 | | Deckel / Cover / Couvercle / Lock / Coperchio | 2 | 2 | 2 | 2 | |
| 9 | 11 11 1 331 772 | | 42 O-Ring / O-ring / Joint torique / O-ring / Anello-O | 2 | 2 | 2 | 2 | |
| 10 | 07 11 9 913 218 | | 6 KT SHR M 5 × 10 | 4 | 4 | 4 | 4 | |
| 11 | 11 31 1 331 880 | | Nockenwelle / Camshaft / Arbre à cames / Kamaxel / Albero a camme | | | 1 | 1 | |
| 12 | 07 11 9 951 077 | | Paßfeder / Feather key / Ressort d'ajustage / Passkil / Chiavetta a molla d'adattam. | 1 | 1 | 1 | 1 | |
| 13 | 11 31 1 331 882 | | Zahnrad / Toothed wheel / Roue dentée / Kugghjul / Ruota dentata | 1 | 1 | 1 | 1 | |
| 14 | 11 27 1 331 872 | | Achse / Pivot / Essieu / Axel / Asse | 1 | 1 | 1 | 1 | |
| 15 | 11 27 1 763 483 | | Zwischenrad / Intermediate gear / Roue intermédiaire / Mellanhjul / Ruota intermedia | 1 | 1 | 1 | 1 | |
| 16 | 11 27 1 331 874 | | Distanzring / Spacer ring / Rondelle d'ecartem. / Distansbricka / Anello distanziatore | 1 | 1 | 1 | 1 | |
| 17 | 11 27 1 331 875 | | Spritzblech / Splash plate / Déflecteur / Stänkbleck / Deflettore | 1 | 1 | 1 | 1 | |
| 18 | 07 11 9 933 060 | | 5 Federring / Spring lock washer / Rondelle élastique / Fjäderbricka / Anello elastico | 4 | 4 | 4 | 4 | |

Zahnrad, Unwucht
Gearwheel, Imbalance
Pignon, Balourd
Kugghjul, Motvikt
Ruota dentata, Sbilanciamento



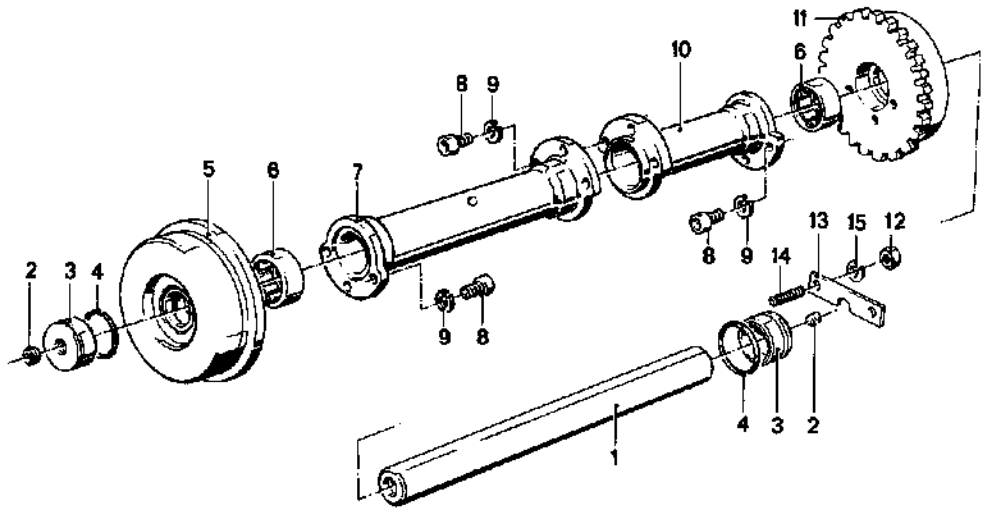


**11/15** D 50 2/85

**11/15** 2/85

| Nr. | Teile-Nummer | Symbol | Benennung | D 35–1 | D 35–2 | D 50–1 | D 50–2 | Bemerkung |
|---|---|---|---|---|---|---|---|---|
| 1 | 11 27 1 331 865 | | Welle / Shaft / Arbre / Axel / Albero | | | 1 | 1 | |
| 2 | 07 11 9 919 004 | | VSLSHR M 10 × 1 | 2 | 2 | 2 | 2 | |
| 3 | 11 27 1 331 867 | | Anlaufbüchse / Check bushing / Douille de butée / Starterbussning / Bussola di avviamento | 2 | 2 | 2 | 2 | |
| 4 | 11 27 1 331 868 | | 33,3 O-Ring / O-ring / Joint torique / O-ring / Anello-O | 2 | 2 | 2 | 2 | |
| 5 | 11 27 1 331 856 | | Unwucht / Imbalance / Balourd / Motvikt / Sbilanciamento | 1 | 1 | 1 | 1 | |
| 6 | 11 27 1 331 864 | | Nadellager / Needle bearing / Roulement à aiguilles / Nållager / Cuscinetto a aghi | 2 | 2 | 2 | 2 | |
| 7 | 11 27 1 331 862 | | Mitnehmer / Driving dog / Entraineur / Medbringare / Trascinatore | 1 | 1 | 1 | 1 | |
| 8 | 07 11 9 919 728 | | ZYLSHR M 8 × 20 | 6 | 6 | 11 | 11 | |
| 9 | 07 11 9 933 096 | | 8 Federring / Spring lockwasher / Rondelle élastique / Fjäderbricka / Anello elastico | 6 | 6 | 11 | 11 | |
| 10 | 11 27 1 331 863 | | Mitnehmer / Driving dog / Entraineur / Medbringare / Trascinatore | | | 1 | 1 | |
| 11 | 11 27 1 331 859 | | Zahnrad mit Unwucht / Gearwheel with imbalance / Pignon avec balourd / Kugghjul med motvikt / Ruota dentata con sbilanciamento | 1 | 1 | 1 | 1 | |
| 12 | 07 11 9 922 078 | | 6 KT MU M 8 | 2 | 2 | 2 | 2 | |
| 13 | 11 27 1 331 869 | | Lasche / Shackle / Attache / Länk / Biscottino | 1 | 1 | 1 | 1 | |
| 14 | 07 11 9 909 452 | | STISHR M 8 × 12 | 2 | 2 | 2 | 2 | |
| 15 | 07 11 9 930 840 | | Federring / Spring lockwasher / Rondelle élastique / Fjäderbricke / Anello elastico | 2 | 2 | 2 | 2 | |

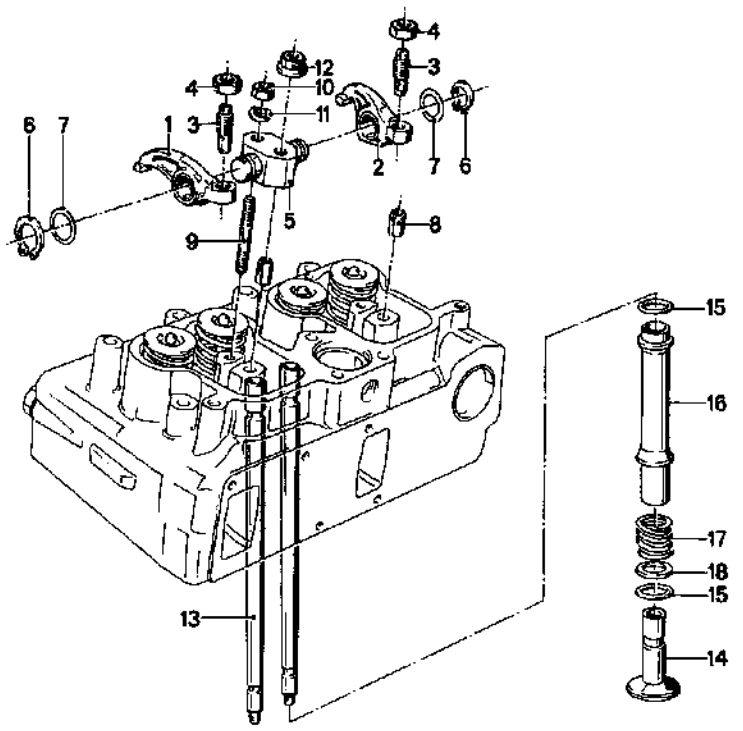


**11/16** D 35 2/85

**11/16** 2/85

| Nr. | Teile-Nummer | Symbol | Benennung | D35-1 | D35-2 | D50-1 | D50-2 | Bemerkung |
|---|---|---|---|---|---|---|---|---|
| 1 | 11 33 1 331 893 | | Kipphebel-Einlaß / Rocker arm, intake / Briquet, admission/ Vipparm, insug / Bilanciere ammissione | 2 | 2 | 3 | 3 | |
| 2 | 11 33 1 331 898 | | Kipphebel-Auslaß / Rocker arm, exhaust / Briquet, échappement / Vipparm, avgas / Bilanciere uscita | 2 | 2 | 3 | 3 | |
| 3 | 11 33 1 331 898 | | Einstellschraube / Adjusting screw / Vis de réglage / Justerskruv / Vite di registrazione | 4 | 4 | 6 | 6 | |
| 4 | 11 33 1 331 557 | | 6 KTMU M 10 × 1 | 4 | 4 | 6 | 6 | |
| 5 | 11 33 1 333 000 | | Kipphebelbock / Rocker arm support / Support de culbuteur / Vipparmsbock / Supporto bilanciere | 2 | 2 | 3 | 3 | |
| 6 | 07 11 9 934 126 | | Sicherungsring / Snap ring / Circlip / Låsring / Anello di sicurezza | 4 | 4 | 6 | 6 | |
| 7 | 11 12 1 329 584 | | 0,2 Ausgleichscheibe / Shim / Rondelle d'écartement / Mellanlägg / Rondella di spessore | 4 | 4 | 6 | 6 | |
| 8 | 07 11 9 941 495 | | Spannstift / Spring dowel sleeve / Goupille de serrage / Spännstift / Perno tenditore di fissaggio | 2 | 2 | 3 | 3 | |
| 9 | 07 11 9 909 129 | | STI SHR M 10 × 55 | 2 | 2 | 3 | 3 | |
| 10 | 07 11 9 922 113 | | 6 KTMU M 10 | 2 | 2 | 3 | 3 | |
| 11 | 07 11 9 932 104 | | A 10 Federscheibe / Spring washer / Rondelle élastique / Fjäderbricka / Rosetta elastico | 2 | 2 | 3 | 3 | |
| 12 | 11 11 1 331 794 | | M 9 Bundmutter / Coupling nut / Ecrou à bourrelet / Flänsmutter / Dado a colletto | 2 | 2 | 3 | 3 | |
| 13 | a 11 32 1 331 865 | | kpl. Stoßstange / Tapped rod / Tige de poussoir / Stötstång / Paraurti | 4 | 4 | 6 | 6 | |
| | b 11 32 1 761 867 | | dito | 4 | 4 | 6 | 6 | |
| 14 | 11 32 1 331 892 | | Stößel / Tappet / Poussoir / Ventillyftare / Punteria | 4 | 4 | 6 | 6 | |
| 15 | 11 32 1 763 378 | | O-Ring / O-ring / Joint torique / O-ring / Anello-O | 8 | 8 | 12 | 12 | |
| 16 | 11 32 1 331 989 | | Schutzrohr / Protective tube / Tube protecteur / Skyddsrör / Tubo di protezione | 4 | 4 | 6 | 6 | |
| 17 | 11 32 1 331 891 | | Druckfeder / Compression spring / Ressort de pression / Tryckfjäder / Molla di compressione | 4 | 4 | 6 | 6 | |
| 18 | 11 32 1 331 890 | | Druckring / Thrust ring / Anneau de pression / Tryckring / Anello appoggio | 4 | 4 | 6 | 6 | |

a) → Mot. Nr. 1167
b) Mot. Nr. dito →

Ventilsteuerung
Timing gear
Commande à soupapes
Ventilstyrning
Comando delle valvole



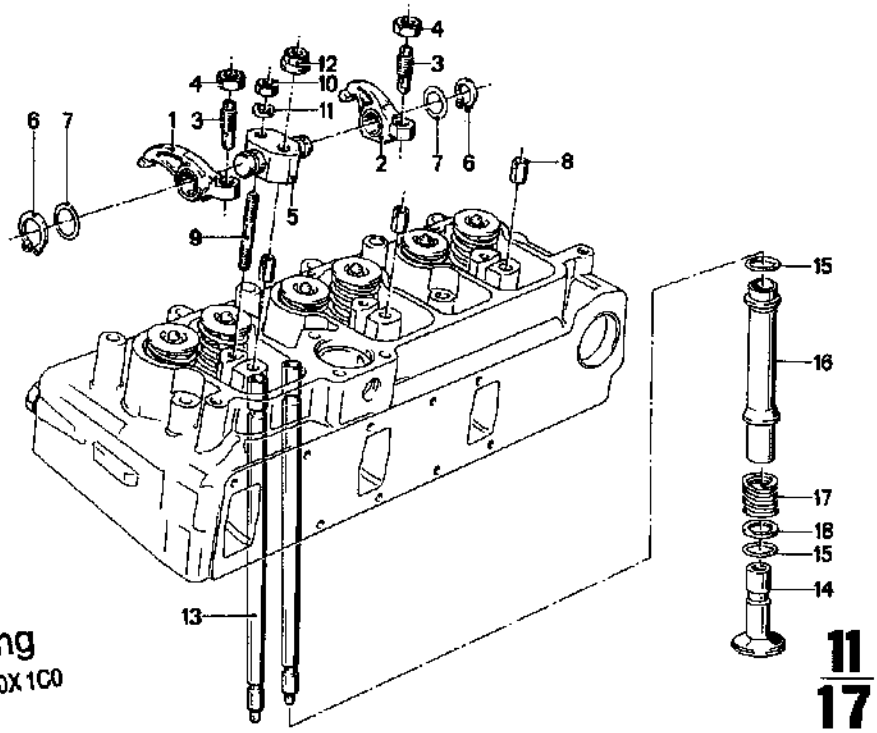


V12 Engineering
Box 50, Ontario, Canada P0X 1C0
www.bmwmarine.net



| 11/17 2/85 | | | | D35–1 | D35–2 | D50–1 | D50–2 | Bemerkung |
|---|---|---|---|---|---|---|---|---|
| Nr. | Teile-Nummer | Symbol | Benennung | | | | | |
| 1 | 11 33 1 331 893 | | Kipphebel-Einlaß / Rocker arm, intake / Briquet, admission/ Vipparm, insug / Bilanciere ammissione | 2 | 2 | 3 | 3 | |
| 2 | 11 33 1 331 896 | | Kipphebel-Auslaß / Rocker arm, exhaust / Briquet, échappement / Vipparm, avgas / Bilanciere uscita | 2 | 2 | 3 | 3 | |
| 3 | 11 33 1 331 898 | | Einstellschraube / Adjusting screw / Vis de réglage / Justerskruv / Vite di registrazione | 4 | 4 | 6 | 6 | |
| 4 | 11 33 1 331 557 | | 8 KT MU M 10 × 1 | 4 | 4 | 6 | 6 | |
| 5 | 11 33 1 333 000 | | Kipphebelbock / Rocker arm support / Support de culbuteur / Vipparmsbock / Supporto bilanciere | 2 | 2 | 3 | 3 | |
| 6 | 07 11 9 934 126 | | Sicherungsring / Snap ring / Circlip / Låsring / Anello di sicurezza | 4 | 4 | 6 | 6 | |
| 7 | 11 12 1 329 584 | | 0,2 Ausgleichscheibe / Shim / Rondelle d'écartement / Mellanlägg / Rondelle di spessore | 4 | 4 | 6 | 6 | |
| 8 | 07 11 9 941 495 | | Spannstift / Spring dowel sleeve / Goupille de serrage / Spännstift / Perno tenditore di fissaggio | 2 | 2 | 3 | 3 | |
| 9 | 07 11 9 909 129 | | ST I SHR M 10 × 55 | 2 | 2 | 3 | 3 | |
| 10 | 07 11 9 922 113 | | 6 KT MU M 10 | 2 | 2 | 3 | 3 | |
| 11 | 07 11 9 932 104 | | A 10 Federscheibe / Spring washer / Rondelle élastique / Fjäderbricka / Rosetta elastico | 2 | 2 | 3 | 3 | |
| 12 | 11 11 1 331 794 | | M 9 Bundmutter / Coupling nut / Ecrou à bourrelet / Flänsmutter / Dado a colletto | 2 | 2 | 3 | 3 | |
| 13 | a 11 32 1 331 885 | — | kpl. Stoßstange / Tapped rod / Tige de poussoir / Stötstång / Paraurti | 4 | 4 | 6 | 6 | |
| | b 11 32 1 761 687 | | dito | 4 | 4 | 6 | 6 | |
| 14 | 11 32 1 331 892 | | Stößel / Tappet / Poussoir / Ventillyftare / Punteria | 4 | 4 | 6 | 6 | |
| 15 | 11 32 1 763 378 | | 17,3 O-Ring / O-ring / Joint torique / O-ring / Anello-O | 8 | 8 | 12 | 12 | |
| 16 | 11 32 1 331 889 | | Schutzrohr / Protective tube / Tube protecteur / Skyddsrör / Tubo di protezione | 4 | 4 | 6 | 6 | |
| 17 | 11 32 1 331 891 | | Druckfeder / Compression spring / Ressort de pression / Tryckfjäder / Molla di compressione | 4 | 4 | 6 | 6 | |
| 18 | 11 32 1 331 890 | | Druckring / Thrust ring / Anneau de pression / Tryckring / Anello appoggio | 4 | 4 | 6 | 6 | |

a) → Mot. Nr. 1296 —
b) Mot. Nr. dito →

Ölpumpe
Oil pump
Pompe à huile
Oljepump
Pompa olio

BMW D 35 / D 50

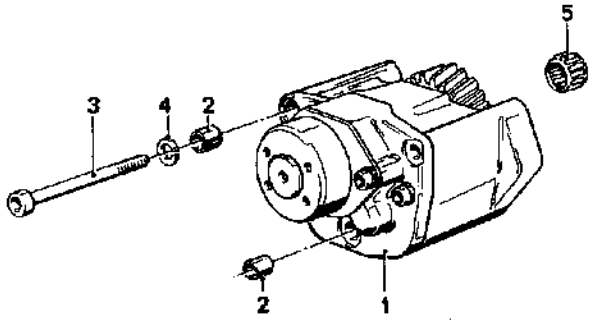


**11/18**
D 35/D 50
2/85

**11/18** 2/85

| Nr. | Teile-Nummer | Symbol | Benennung | D 35–1 | D 35–2 | D 50–1 | D 50–2 | Bemerkung |
|---|---|---|---|---|---|---|---|---|
| 1 | 11 41 1 763 360 | | kpl. Ölpumpe / Oil pump / Pompe à huile / Oljepump / Pompa olio | 1 | 1 | 1 | 1 | |
| 2 | 07 11 9 941 465 | | 8 × 12 Spannstift / Spring dowel sleeve / Goupille de serrage / Spännstift / Perno tenditore di fissaggio | 2 | 2 | 2 | 2 | |
| 3 | 07 11 9 919 596 | | ZYLSHR M 8 × 105 | 3 | 3 | 3 | 3 | |
| 4 | 07 11 9 933 096 | | 8 Federring / Spring lock washer / Rondelle élastique / Fjäderbricka / Anello elastico | 3 | 3 | 3 | 3 | |
| 5 | 11 41 1 333 130 | | Nadelhülse / Needle sleeve / Douille à aiguilles / Nålhylsa / Bussola ad ago | 1 | 1 | 1 | 1 | |

# Ölkühlung
# Oil-Cooling
# Refroidissement à huile
# Olje-Kylning
# Raffreddamento olio

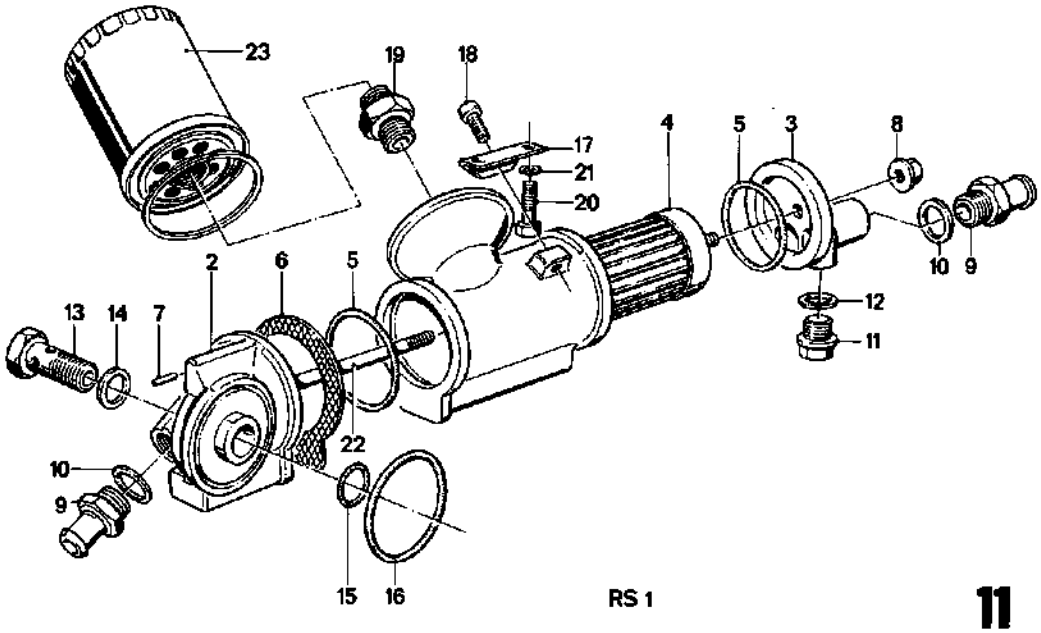


RS 1



| 11/19 2/85 Nr. | Teile-Nummer | Symbol | Benennung | D35–1 | D35–2 | D50–1 | D50–2 | Bemerkung |
|---|---|---|---|---|---|---|---|---|
| 1 | 11 44 1 761 000 | RS | Ölkühler / Oil cooler / Réfrigérant d'huile / Oljekylare / Radiatore dell'olio | | 1 | | 1 | |
| 2 | a 11 44 1 333 367 | | Winkelflansch / Angle flange / Flasque angulaire / Vinkelfläns / Flangia angolare | | 1 | | 1 | |
| 3 | a 11 44 1 333 358 | | Deckel / Cover / Couvercle / Lock / Coperchio | | 1 | | 1 | |
| 4 | 11 44 1 333 370 | | Kühlereinsatz / Radiator insert / Element de radiateur / Radiatorinsats / Inserzione radiatore | | 1 | | 1 | |
| 5 | 11 44 1 333 363 | | O-Ring / O-ring / Joint torique / O-ring / Anello-O | | 2 | | 2 | |
| 6 | a 11 44 1 333 361 | | Dichtung / Seal / Garniture / Packning / Guarnizione | | 1 | | 1 | |
| 7 | a 07 11 9 941 460 | | Spannstift / Spring dowel sleeve / Goupille de serrage / Spännstift / Perno tenditore di fissaggio | | 1 | | 1 | |
| 8 | 11 44 1 333 371 | | Dichtmutter / Sealing unit / Ecrou d'etanchéité / Tätningsmutter / Dado di tenuta | | 1 | | 1 | |
| 9 | 11 44 1 333 360 | | Schlauchstutzen / Hose nozzle / Raccord de tuyau / Anslutningsstycke / for slang / Raccordo per tubo flessibile | | 2 | | 2 | |
| 10 | 07 11 9 963 355 | | DT RG | | 2 | | 2 | |
| 11 | a 07 11 9 919 187 | | VSL SHR | | 1 | | 1 | |
| 12 | a 07 11 9 963 200 | | DT RG | | 1 | | 1 | |
| 13 | a 11 44 1 333 379 | | Hohlschraube / Banjo bolt / Vis creuse / Hålskruv / Vite cava | | 1 | | 1 | |
| 14 | 07 11 9 963 308 | | DT RG | | 1 | | 1 | |
| 15 | 11 44 1 333 366 | | O-Ring / O-ring / Joint torique / O-ring / Anello-O | | 1 | | 1 | |
| 16 | 11 41 1 331 662 | | dito | | 1 | | 1 | |
| 17 | 11 44 1 333 359 | | Haltewinkel / Support angle / Corniere d'appui / Vindelstöd / Squadra di sostegno | | 1 | | 1 | |
| 18 | 07 11 9 919 969 | | ZYL SHR M 8 × 20 | | 1 | | 1 | |
| 19 | 11 11 1 280 915 | | Einschraubstutzen / Male connector / Raccord fileté / Skruvstuts / Tronchetto filettato | | 1 | | 1 | |
| 20 | 07 11 9 913 655 | | 6 KT SHR M 8 × 25 | | 2 | | 2 | |
| 21 | 07 11 9 933 096 | | B 8 Federring / Spring lock washer / Rondelle élastique / Fjäderbricka / Anello elastico | | 2 | | 2 | |
| 22 | 11 44 1 333 362 | | STI SHR | | 1 | | 1 | |
| 23 | 11 42 1 761 087 | | Wechselölfilter / Secondary oil filter / Filtre à huile secondaire / Oljerenare / Filtro dell'olio secondario | 1 | 1 | 1 | 1 | |

a) → Mot. Nr. 1256 (D35-1 / D35-2) 1370 / 1417 bis 1435 (D50-1) 1331 (D50-2)

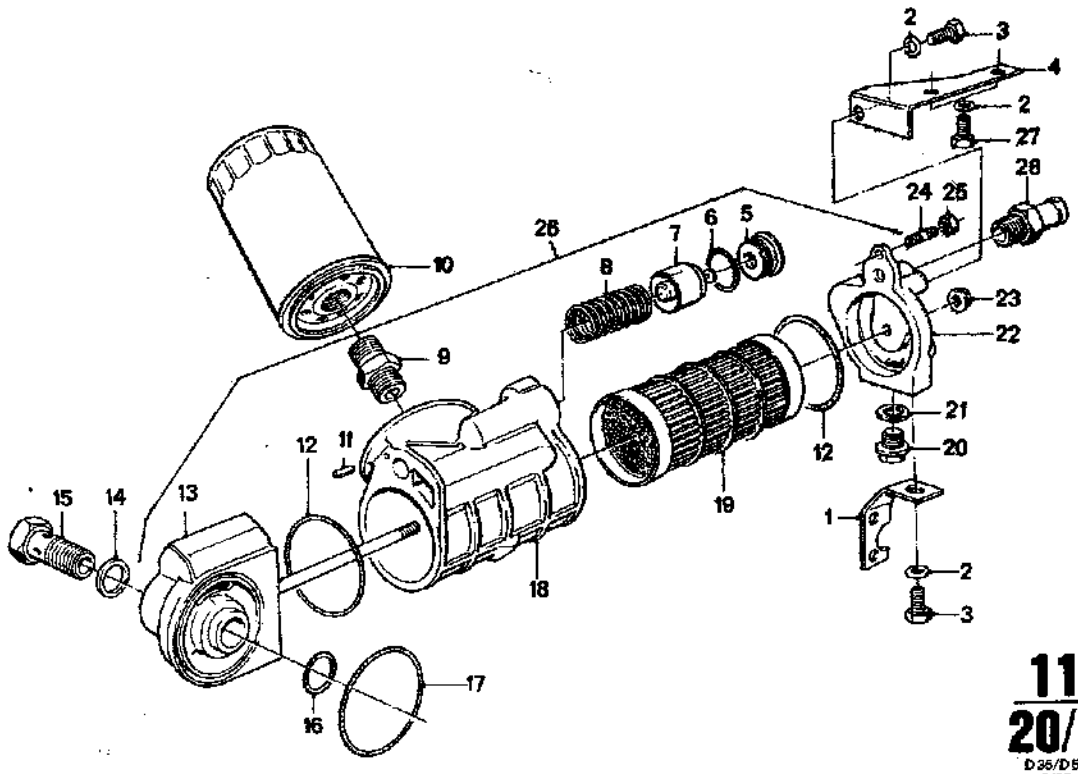


**11**
**20/1**
D 35/D 50
2/85

**11 20/1** 2/85

| Nr. | Teile-Nummer | Symbol | Benennung | D 35-1 | D 35-2 | D 50-1 | D 50-2 | Bemerkung |
|---|---|---|---|---|---|---|---|---|
| 1 | a 11 44 1 761 024 | | Haltewinkel / Support angle / Corniere d'appui / Vinkelstöd / Squadra di sostegno | 1 | 1 | | | |
| 2 | a 07 11 9 931 067 | | A 8,4 Scheibe / Washer / Rondelle / Bricka / Rondella | 1 | 1 | 3 | 3 | |
| 3 | a 07 11 9 913 627 | | 6 KT SHR M 8 x 18 | 1 | 1 | 1 | 1 | |
| 4 | a 11 44 1 761 025 | | Haltewinkel / support angle / Corniere d'appui / Vinkelstöd / Squadra di sostegno | | | 1 | 1 | |
| 5 | a 11 44 1 761 029 | | Thermostatdeckel / Thermostat cover / Couvercle de thermostat / Termostatlock / Coperchio del termostato | 1 | 1 | 1 | 1 | |
| 6 | a 11 41 1 304 178 | | O-Ring / O-ring / Joint torique / O-ring / Anello-O | 1 | 1 | 1 | 1 | |
| 7 | a 11 44 1 761 028 | | Thermostat / Thermostat / Termostat / Thermostat / Termostat | 1 | 1 | 1 | 1 | |
| 8 | a 11 44 1 761 027 | | Feder / Spring / Ressort / Fjäder / Molla | 1 | 1 | 1 | 1 | |
| 9 | 11 11 1 280 915 | | Stutzen / Connection / Tubulure / Stuts / Bocchettone | 1 | 1 | 1 | 1 | |
| 10 | 11 42 1 761 087 | | Wechselölfilter / Secondary oil filter / Filtre à huile secondaire / Oljerenare / Filtro dell'olio secondario | 1 | 1 | 1 | 1 | |
| 11 | a 07 11 9 941 431 | | Spannstift / Spring dowel sleeve / Goupille de serrage / Spännstift / Perno tenditore di fissaggio | 1 | 1 | 1 | 1 | |
| 12 | 11 44 1 333 363 | | O-Ring / O-ring / Joint torique / O-ring / Anello-O | 2 | 2 | 2 | 2 | |
| 13 | a 11 44 1 761 015 | | Winkelflansch / Angle flange / Flasque angulaire / Vinkelfläns / Flangia angolare | 1 | 1 | 1 | 1 | |
| 14 | 07 11 9 963 308 | | DT RG | 1 | 1 | 1 | 1 | |
| 15 | a 11 44 1 761 026 | | Hohlschraube / Banjo bolt / Vis creuse / Hålskruv / Vite cava / Vite cava | 1 | 1 | 1 | 1 | |
| 16 | 11 44 1 333 366 | | O-Ring / O-ring / Joint torique / O-ring / Anello-O | 1 | 1 | 1 | 1 | |
| 17 | 11 41 1 335 529 | | dito | 1 | 1 | 1 | 1 | |
| 18 | a 11 44 1 761 016 | | Gehäuse / Housing / Carter / Hus / Scatola | 1 | 1 | 1 | 1 | |
| 19 | 11 44 1 333 370 | | Kühlereinsatz / Radiator insert / Element de radiateur / Radiatorinsats / Inserzione radiatore | 1 | 1 | 1 | 1 | |
| 20 | a 11 44 1 763 260 | | VSL SHR | 1 | 1 | 1 | 1 | |
| 21 | a 07 11 9 963 201 | | DT RG A 14 | 1 | 1 | 1 | 1 | |
| 22 | a 11 44 1 761 011 | | Deckel / Cover / Couvercle / Lock / Coperchio | 1 | 1 | 1 | 1 | |
| 23 | 11 44 1 333 371 | | DT MU | 1 | 1 | 1 | 1 | |
| 24 | a 07 11 9 908 295 | | STI SHR M 6 x 16 | 1 | 1 | 1 | 1 | |
| 25 | a 07 11 9 922 058 | | 6 KT MU M 6 | 1 | 1 | 1 | 1 | |

a) Mot. Nr. → 1259 (D35-1 / D35-2) 1371–1418 / 1436 (D50-1) 1332 (D50-2)
b) ersetzt alten Ölkühler (11 44 1 333 379) / replaces old oil cooler (11 44 1 333 379) / remplace l'ancien radiateur d'huile (11 44 1 333 379) / ersätter den gamla oljekylaren (11 44 1 333 379) / sostituisce il vecchio radiatore dell'olio (11 44 1 333 379)

V12 Engineering
Box 50, Ontario, Canada P0X 1G0
www.bmwmarine.net

Ölkühlung
Oil-Cooling
Refroidissement à huile
Olje-Kylning
Raffreddamento olio

BMW D 35 / D 50

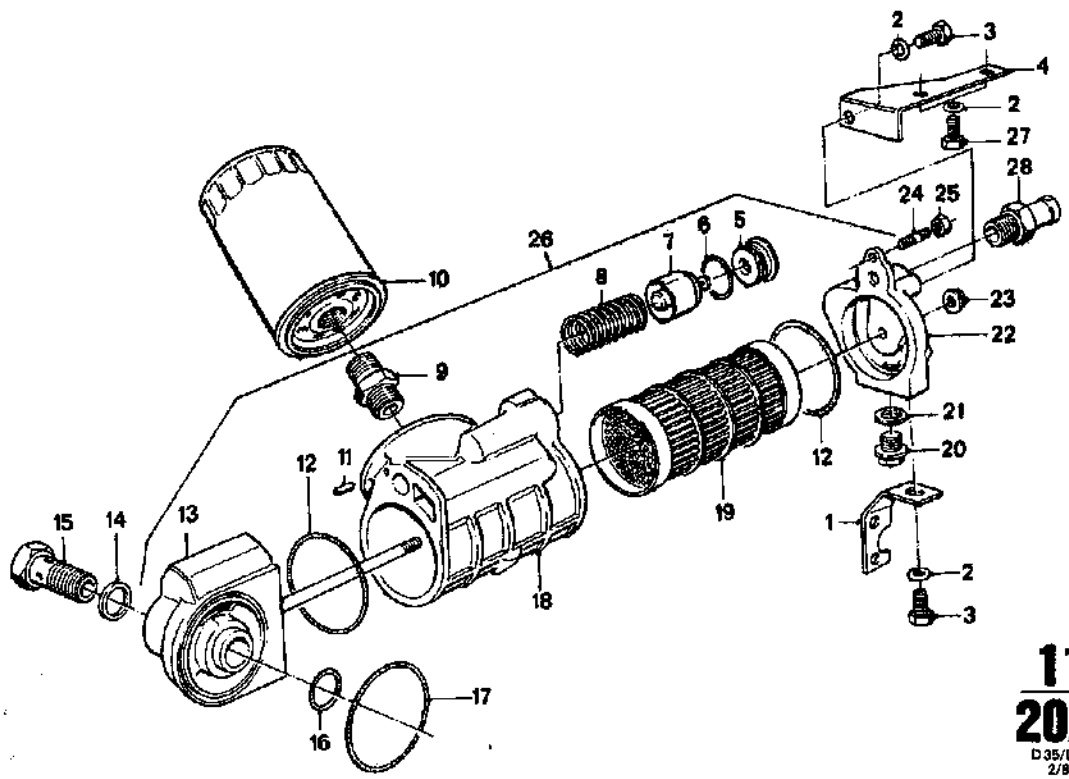


**11**
**20/2**
D35/D50
2/85

**11 / 20/2** 2/85

| Nr. | Teile-Nummer | Symbol | Benennung | D35-1 | D35-2 | D50-1 | D50-2 | Bemerkung |
|---|---|---|---|---|---|---|---|---|
| 26 | a b 11 44 1 761 720 | | kpl. Ölkühler / Oil cooler / Réfrigérant d'huile / Oljekylare / Radiatore dell'olio | 1 | 1 | 1 | 1 | |
| 27 | a 07 11 9 913 624 | | 6 KT SHR M 8 × 16 | 2 | 2 | | | |
| 28 | a 17 11 1 333 794 | | Schlauchstutzen / Hose nozzle / Raccord de tuyau / Anslutningsstycke för slang / Raccordo per tubo flessibile | 1 | 1 | 1 | 1 | |

V12 Engineering
Box 50, Ontario, Canada P0X 1C0
www.bmwmarine.net

a) Mot. Nr. → 1259 (D35-1 / D35-2) 1371 – 1416 / 1436 (D50-1) 1332 (D50-2)
b) ersetzt alten Ölkühler (11 44 1 333 379) / replaces old oil cooler (11 44 1 333 379) / remplace l'ancien radiateur d'huile (11 44 1 333 379) / ersätter den gamla oljekylaren (11 44 1 333 379) / sostituisce il vecchio radiatore dell'olio

Ölkühlung
Oil-Cooling
Refroidissement à huile
Olje-Kylning
Raffreddamento olio

BMW D35 / D50

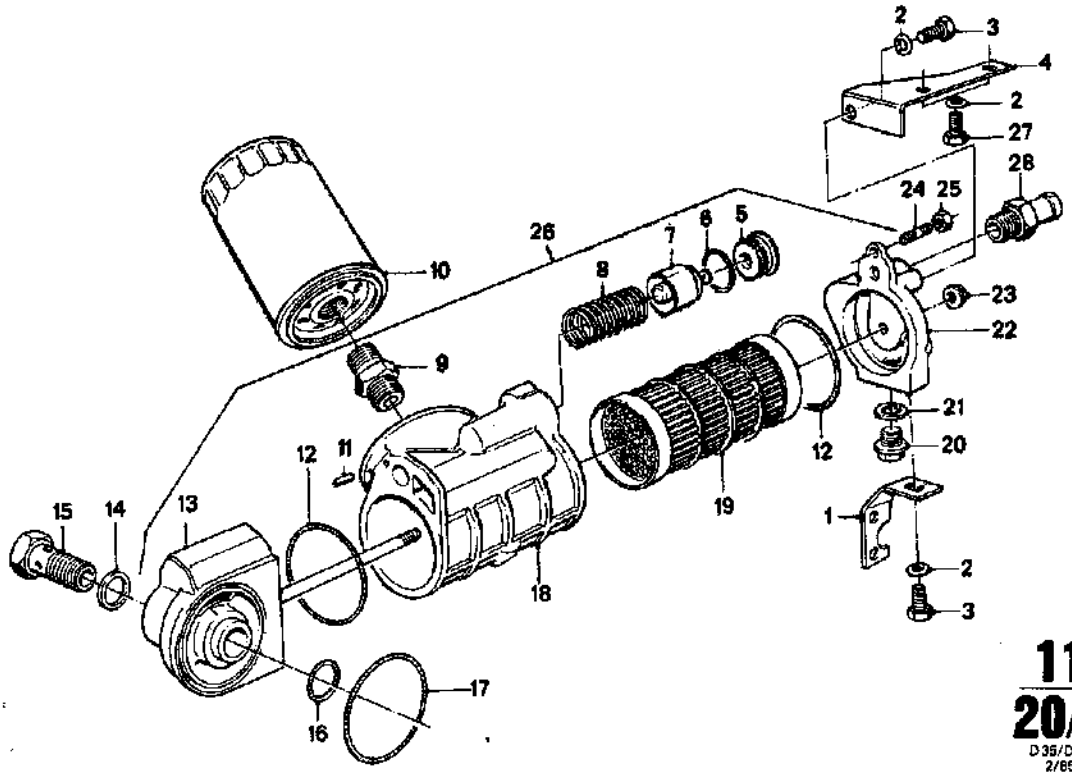


**11**
**20/2**
D35/D50
2/85

**11 20/2** 2/85

| Nr. | Teile-Nummer | Symbol | Benennung | D35-1 | D35-2 | D50-1 | D50-2 | Bemerkung |
|---|---|---|---|---|---|---|---|---|
| 26 | a b 11 44 1 761 720 | | kpl. Ölkühler / Oil cooler / Réfrigérant d'huile / Oljekylare / Radiatore dell'olio | 1 | 1 | 1 | 1 | |
| 27 | a 07 11 9 913 624 | | 6 KT SHR M 8 × 16 | 2 | 2 | | | |
| 28 | a 17 11 1 333 784 | | Schlauchstutzen / Hose nozzle / Raccord de tuyau / Anslutningsstycke for slang / Raccordo per tubo flessibile | 1 | 1 | 1 | 1 | |

V12 Engineering
Box 50, Ontario, Canada P0X 1C0
www.bmwmarine.net

a) Mot. Nr. → 1259 (D35-1 / D35-2) 1371 – 1416 / 1436 (D50-1) 1332 (D50-2)
b) ersetzt alten Ölkühler (11 44 1 333 379) / replaces old oil cooler (11 44 1 333 379) / remplace l'ancien radiateur d'huile (11 44 1 333 379) / ersätter den gamla oljeky laren (11 44 1 333 379) / sostituisce il vecchio radiatore dell'olio

Abgassammler
Exhaust plenum chamber
Collecteur de gaz d'échappement
Avgassamlare
Collettore gas di scarico

BMW D 35 / D 50

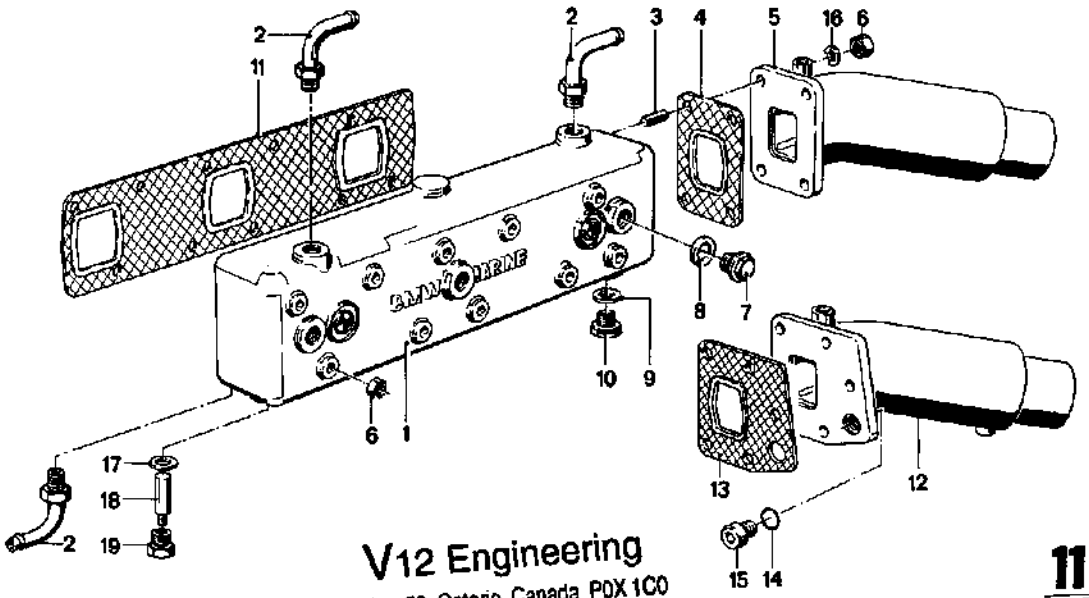


V12 Engineering
Box 50, Ontario, Canada P0X 1C0
www.bmwmarine.net

11
22
D 50
2/85

| 11/22 2/85 | | | | | | | | | |
|---|---|---|---|---|---|---|---|---|---|
| Nr. | Teile-Nummer | Symbol | Benennung | D 35–1 | D 35–2 | D 50–1 | D 50–2 | | Bemerkung |
| 1 | 11 62 1 329 207 | | Abgassammler / Exhaust plenum chamber / Collecteur d'échappement / Avgassamlare / Collettore gas di scarico | | | 1 | | | |
| 2 | 17 12 1 331 449 | | Rohrkrümmer / Pipe elbow / Coude / Rörkrök / Gomito | 3 | | 3 | | | |
| 3 | 07 11 9 909 067 | | STI SHR M 8 × 20 | 4 | | 4 | | | |
| 4 | 11 62 1 329 808 | | Dichtung / Seal / Garniture / Packning / Guarnizione | 1 | | 1 | | | |
| 5 | 11 62 1 331 363 | | Abgasflanschrohr / Exhaust gas flange tube / Tube d'échappement à bride / Avgas-flänsrör / Tubo di scarico flangiato | 1 | | 1 | | | |
| 6 | 11 62 1 333 233 | | 6 KT MU M 8 | 11 | | 15 | | | |
| 7 | 07 11 9 919 187 | | VSL SHR | 2 | | 3 | | | |
| 8 | 11 62 1 331 556 | | DT RG | 2 | | 3 | | | |
| 9 | 07 11 9 963 201 | | DT RG | 1 | | 1 | | | |
| 10 | 11 12 1 763 261 | | VSL SHR | 1 | | 1 | | | |
| 11 | 11 62 1 329 138 | | Dichtung / Seal / Garniture / Packning / Guarnizione | | | 1 | 1 | | |
| 12 | 11 62 1 333 344 | | Abgasflanschrohr / Exhaust gas flange tube / Tube d'échappement à bride / Avgas-flänsrör / Tubo di scarico flangiato | | 1 | | 1 | | |
| 13 | 11 62 1 333 345 | | Dichtung / Seal / Garniture / Packning / Guarnizione | | 1 | | 1 | | |
| 14 | 07 11 9 963 354 | | DT RG A 22 | | 1 | | 1 | | |
| 15 | 07 11 9 919 131 | | VSL SHR M 22 × 1,5 | | 1 | | 1 | | |
| 16 | 07 11 9 932 095 | | B 8 Federscheibe / Spring washer / Rondelle élastique / Fjäderbricka / Rosetta elastico | 4 | | 4 | | | |
| 17 | a 07 11 9 963 290 | | DT RG A 17 | 1 | | 1 | | | |
| 18 | a 17 11 1 329 197 | | Opferanode / Reactive anode / Anode consommable / Offeranod / Anodo anticorrosione | 1 | | 1 | | | |
| 19 | a 17 11 1 763 345 | | VSL SHR | 1 | | 1 | | | |

a) Mot.-Nr. → 528

V12 Engineering
Box 50, Ontario, Canada P0X 1C0
www.bmwmarine.net

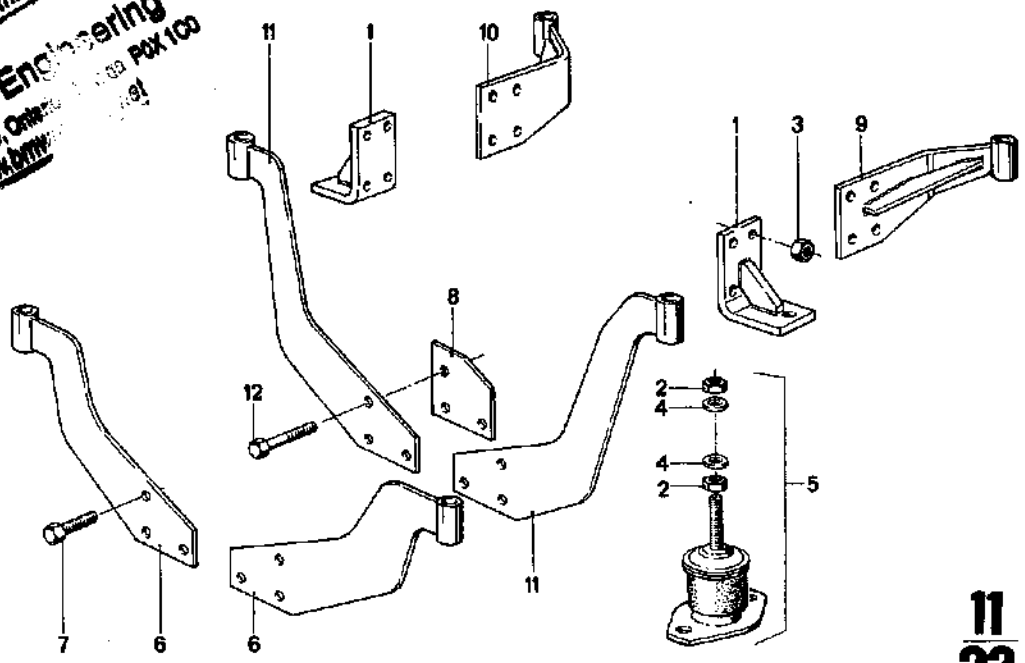


**11/23** D 35/D 50 2/85

**11/23** 2/85

| Nr. | Teile-Nummer | Symbol | Benennung | D35–1 | D35–2 | D50–1 | D50–2 | Bemerkung |
|---|---|---|---|---|---|---|---|---|
| 1 | b 11 81 1 333 279 | | Lagerbock – hinten / Rear bearing support / Support de palier arrière / Lagerbock, bakre / Supporto del cuscinetto – posteriore | 2 | | 2 | | |
| 2 | 07 11 9 922 176 | | 6 KT MU M 16 × 1,5 | 8 | 8 | 8 | 8 | |
| 3 | 07 11 9 922 113 | | 6 KT MU M 8 | 8 | 8 | 8 | 8 | |
| 4 | 07 11 9 931 094 | | Scheibe / Washer / Rondelle / Bricka / Rondella | 8 | 8 | 8 | 8 | |
| 5 | a 11 81 1 329 413 | | Konuslager / Tapered bearing / Palier conique / Koniskt lager / Cuscinetto a rulli conici | 4 | 4 | 4 | 4 | |
| 6 | b 11 81 1 333 276 | | Lagerbock – vorne / Front bearing support / Support de palier avant / Lagerbock, främre / Supporto del cuscinetto – anteriore | 2 | | 2 | | |
| 7 | 07 11 9 913 892 | | 6 KT SHR M 12 × 25 | 6 | | 6 | | |
| 8 | c 11 81 1 331 375 | | Distanzblech / Spacing plate / Tôle d'écartement / Distansbleck / Lamiera distanziatore | 2 | 2 | 2 | 2 | |
| 9 | c 11 81 1 333 728 | R | Lagerbock – hinten / Rear bearing support / Support de palier arrière / Lagerbock, bakre / Supporto del cuscinetto – posteriore | 1 | 1 | 1 | 1 | |
| 10 | c 11 81 1 333 744 | L | dito | 1 | 1 | 1 | 1 | |
| 11 | c 11 81 1 331 372 | | Lagerbock – vorne / Front bearing support / Support de palier avant / Lagerbock, främre / Supporto del cuscinetto – anteriore | 2 | 2 | 2 | 2 | |
| 12 | c 07 11 9 913 895 | | 6 KT SHR M 12 × 43 | 6 | 6 | 6 | 6 | |

a) HS 50
b) → Mot. Nr. 1264 (D35-1) 1370 (D50-1)
c) Mot. Nr. → dito

Generator – Bosch
Generator – Bosch
Générateur – Bosch
Generator – Bosch
Generatore – Bosch

BMW D 35 / D 50

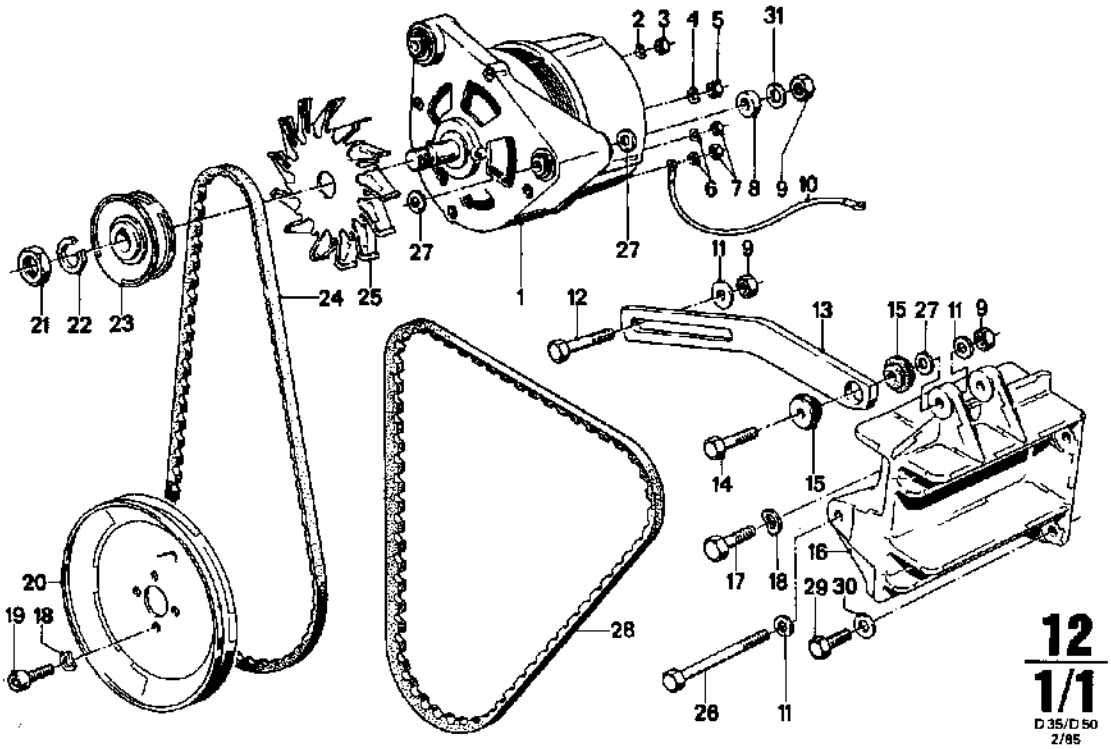


**12 / 1/1**
D 35/D 50
2/85

| 12 / 1/1 | 2/85 | | | D 35-1 | D 35-2 | D 50-1 | D 50-2 | | |
|---|---|---|---|---|---|---|---|---|---|
| Nr. | Teile-Nummer | Symbol | Benennung | | | | | | Bemerkung |
| 1 | 12 31 1 329 997 | | kpl. 14 V 55 A Generator / Generator / Générateur / Generator / Generatore | 1 | | 1 | | | Bosch |
| 2 | 07 11 9 932 062 | | A 6 Federscheibe / Spring washer / Rondelle élastique / Fjäderbricka / Rosetta elastico | 1 | | 1 | | | |
| 3 | 07 11 9 922 058 | | 6 KT MU M 6 | 1 | | 1 | | | |
| 4 | 07 11 9 932 020 | | A 4 Federscheibe / Spring washer / Rondelle élastique / Fjäderbricka / Rosetta elastico | 1 | | 1 | | | |
| 5 | 07 11 9 922 028 | | 6 KT MU M 4 | 1 | | 1 | | | |
| 6 | 07 11 9 932 043 | | A 5 Federscheibe / Spring washer / Rondelle élastique / Fjäderbricka / Rosetta elastico | 2 | 2 | 2 | 2 | | |
| 7 | 07 11 9 913 212 | | 6 KT MU M 5 | 2 | 2 | 2 | 2 | | |
| 8 | 12 31 1 329 282 | | Distanzbuchse / Spacer socket / Douille d'écartement / Distanshylsa / Boccola distanziatore | 1 | 1 | 1 | 1 | | |
| 9 | 11 62 1 333 233 | | 6 KT MU M 8 | 3 | 3 | 3 | 3 | | |
| 10 | 61 12 1 382 920 | | Massekabel / Ground lead / Câble de masse / Jordledningskabel / Cavo di massa | 1 | 1 | 1 | 1 | | |
| 11 | 07 11 9 936 432 | | 8,4 Scheibe / Washer / Rondelle / Bricka / Rondella | 1 | 1 | 1 | 1 | | Bosch |
| 12 | 07 11 9 912 506 | WW | 6 KT SHR M 8 × 45 | 1 | 1 | 1 | 1 | | Bosch |
| | 07 11 9 913 676 | WW | 6 KT SHR M 8 × 35 | 1 | 1 | 1 | 1 | | Motorola |
| 13 | 12 31 1 329 265 | | Spannlasche / Tightening clip / Eclisse de réglage / Spännlask / Biscottino di tensione | 1 | 1 | 1 | 1 | | |
| 14 | 07 11 9 913 679 | | 6 KT SHR M 8 × 40 | 1 | 1 | 1 | 1 | | |
| 15 | 32 41 1 261 404 | | Buchse / Bushing / Manchon / Bussning / Boccola | 2 | 2 | 2 | 2 | | |
| 16 | 12 31 1 333 788 | | Lagerbock / Support / Support de palier / Lagerbock / Cavalletto di supporto | 1 | 1 | 1 | 1 | | |
| 17 | 07 11 9 913 644 | | 6 KT SHR M 8 × 20 | 4 | 4 | 4 | 4 | | |
| 18 | 07 11 9 932 081 | | 8 8 Federscheibe / Spring washer / Rondelle élastique / Fjäderbricka / Rosetta elastico | 8 | 6 | 8 | 6 | | |
| 19 | 07 11 9 919 694 | | ZYL SHR M 8 × 12 | 4 | 4 | 4 | 4 | | |
| 20 | 12 31 1 329 266 | | Keilriemenscheibe / V-belt pulley / Poulie à gorge / Kilremsskiva / Puleggia della cinghia trapezoidale | 1 | 1 | 1 | 1 | | |
| 21 | 07 11 9 921 631 | | 6 KT MU M 14 × 1,5 | 1 | | 1 | | | |

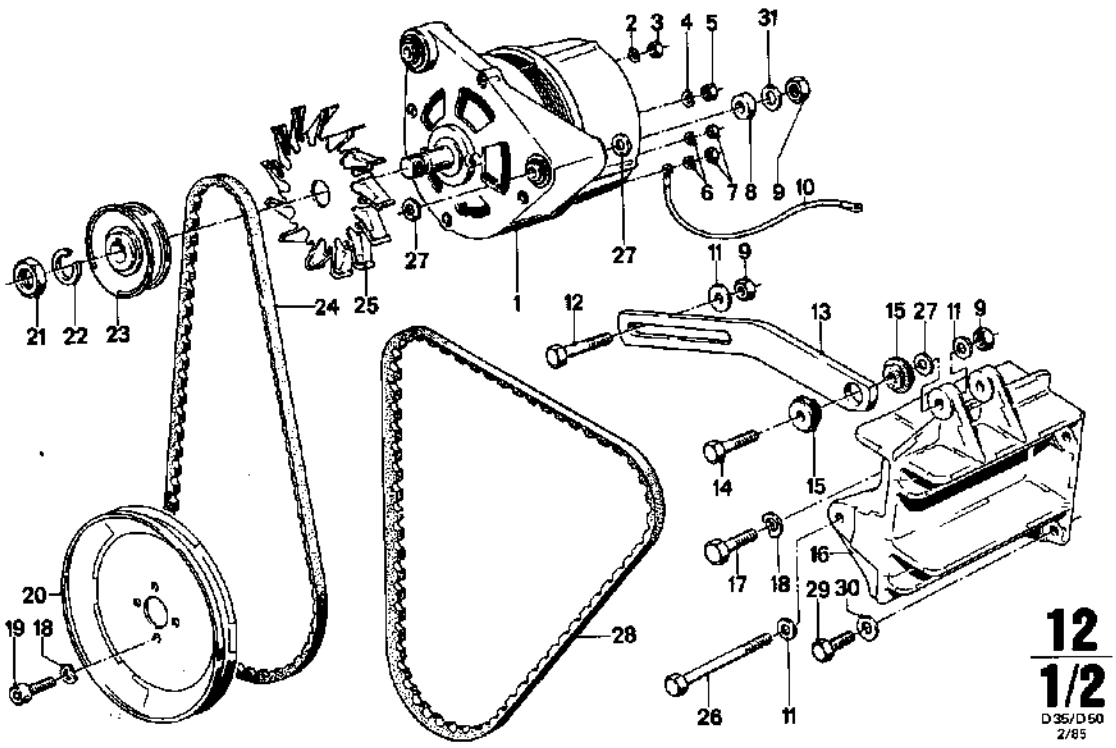


**12 / 1/2**
D35/D50
2/85

**12 / 1/2** 2/85

| Nr. | Teile-Nummer | Symbol | Benennung | D 35–1 | D 35–2 | D 50–1 | D 50–2 | Bemerkung |
|---|---|---|---|---|---|---|---|---|
| 22 | 07 11 9 933 149 | | B 14 Federscheibe / Spring washer / Rondelle élastique / Fjäderbricka / Rosetta elastico | 1 | | 1 | | |
| 23 | 12 31 1 361 611 | | Keilriemenscheibe / V-belt pulley / Poulie à gorge / Kilremsskiva / Puleggia della cinghia trapezoidale | 1 | | 1 | | |
| 24 | 12 31 1 331 436 | | 9,5 × 913 Keilriemen / V-belt / Courroie trapézoidale / Kilrem / Cinghia trapezoidale | 1 | | 1 | | |
| 25 | 12 31 1 329 935 | | Lüfter / Fan / Ventilateur / Ventilator / Ventilatore | 1 | | 1 | | |
| 26 | 07 11 9 912 562 | | 6 KT SHR M 8 × 85 | 1 | 1 | 1 | 1 | |
| 27 | 07 11 9 931 067 | | 8,4 Scheibe / Washer / Rondelle / Bricka / Rondella | 3 | 3 | 3 | 3 | |
| 28 | 12 31 1 333 332 | | 9,5 × 1275 Keilriemen / V-belt / Courroie trapézoidale / Kilrem / Cinghia trapezoidale | | 1 | | 1 | |
| 29 | 07 11 9 913 662 | | 6 KT SHR M 8 × 30 | | 2 | | 2 | |
| 30 | 13 41 1 333 070 | | Scheibe / Washer / Rondelle / Bricka / Rondella | | 2 | | 2 | |
| 31 | 13 21 1 328 726 | | dito | | 1 | | 1 | |

Generator – Bosch
Generator – Bosch
Générateur – Bosch
Generator – Bosch
Generatore – Bosch

BMW D 35 / D 50

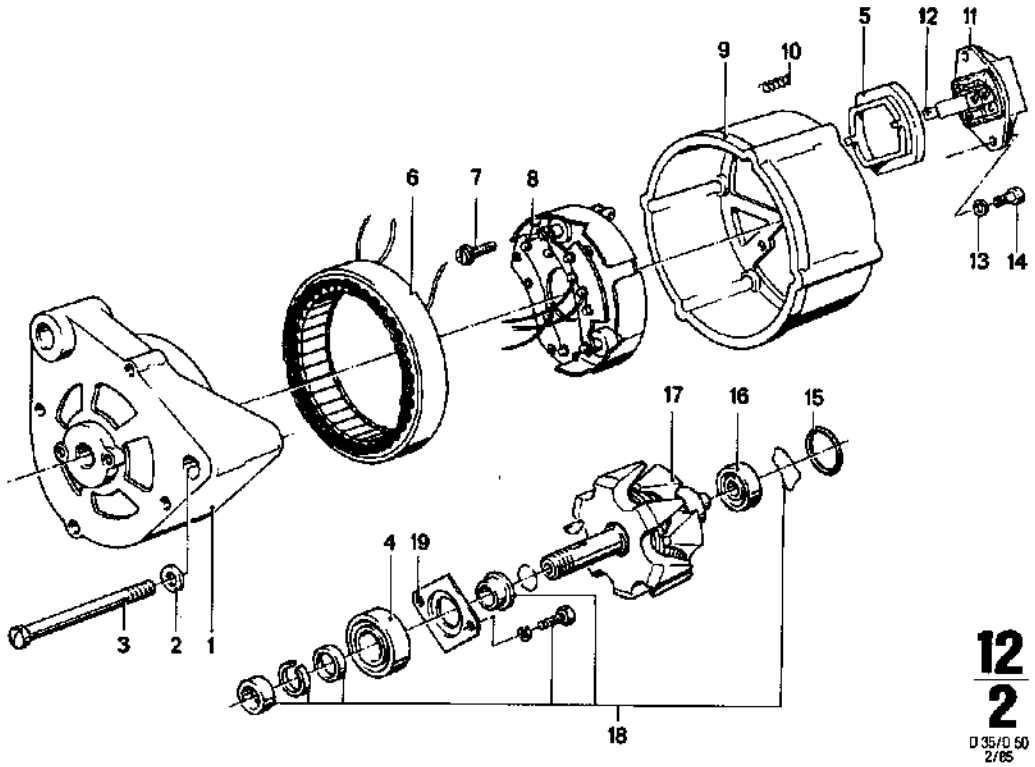


**12/2**
D 35/D 50
2/85

**12/2** 2/85

| Nr. | Teile-Nummer | Symbol | Benennung | D 35–1 | D 35–2 | D 50–1 | D 50–2 | Bemerkung |
|---|---|---|---|---|---|---|---|---|
| 1 | 12311328424 | | Antriebslager / Drive bearing / Roulement de trans. / Drivlager / Cuscinetto di comando | 1 | | 1 | | |
| 2 | 07119931036 | | 5,3 Scheibe / Washer / Rondelle / Bricka / Rondella | 4 | | 4 | | |
| 3 | 12311330130 | | ZYL SHR | 4 | | 4 | | |
| 4 | 12311328425 | | Rillenkugellager / Deep-croove ball bearing / Roulement rainuré billes / Spårkullager / Cuscin. a sfere scanal. | 1 | | 1 | | |
| 5 | 12311330097 | | Dichtung / Seal / Garniture / Packning / Guarnizione | 1 | | 1 | | |
| 6 | 12311330089 | | Ständer / Stator / Stator / Statorn / Statore | 1 | | 1 | | |
| 7 | 12311330090 | | SHR | 3 | | 3 | | |
| 8 | 12311330091 | | Diodenplatte / Diode plate / Porte-diodes / Diodplatta / Placca di diodi | 1 | | 1 | | |
| 9 | 12311330092 | | Schleifringlager / Slipring support / Palier de bague collectrice / Släpringslager / Supporto anello collettore | 1 | | 1 | | |
| 10 | 12311330093 | | Druckfeder / Return spring / Ressort de pression / Tryckfjäder / Molla di compressione | 2 | | 2 | | |
| 11 | 12321326690 | | Reglerschalter / Regulator / Régulateur / Regulator-strömställare / Gruppo regolatore e interruttore di minima | 1 | | 1 | | |
| 12 | 12311330094 | | Kohlebürstensatz / Brush set / Jeu de balais de charbon / Sats kolborstar / Corredo spazz. carbone | 1 | | 1 | | |
| 13 | 07119932020 | | A4 Federscheibe / Spring washer / Rondelle élastique / Fjäderbricka / Rosetta elastico | 2 | | 2 | | |
| 14 | 12311330095 | | ZYL SHR M 4 x 18 | 2 | | 2 | | |
| 15 | 12311330098 | | O-Ring / O-ring / Joint torique / O-ring / Anello-O | 1 | | 1 | | |
| 16 | 12311328426 | | Rillenkugellager / Deep-croove ball bearing / Roulement rainuré à billes / Spårkullager / Cuscin. a sfere scanal. | 1 | | 1 | | |
| 17 | 12311328428 | | Läufer / Rotor / Rotor / Ankare / Rotore | 1 | | 1 | | |
| 18 | 12311330099 | RS | dito | 1 | | 1 | | |
| 19 | 12311328427 | | Halteplatte / Retainer plate / Plaque de fixation / Hållarplåt / Piastra di sostegno | 1 | | 1 | | |

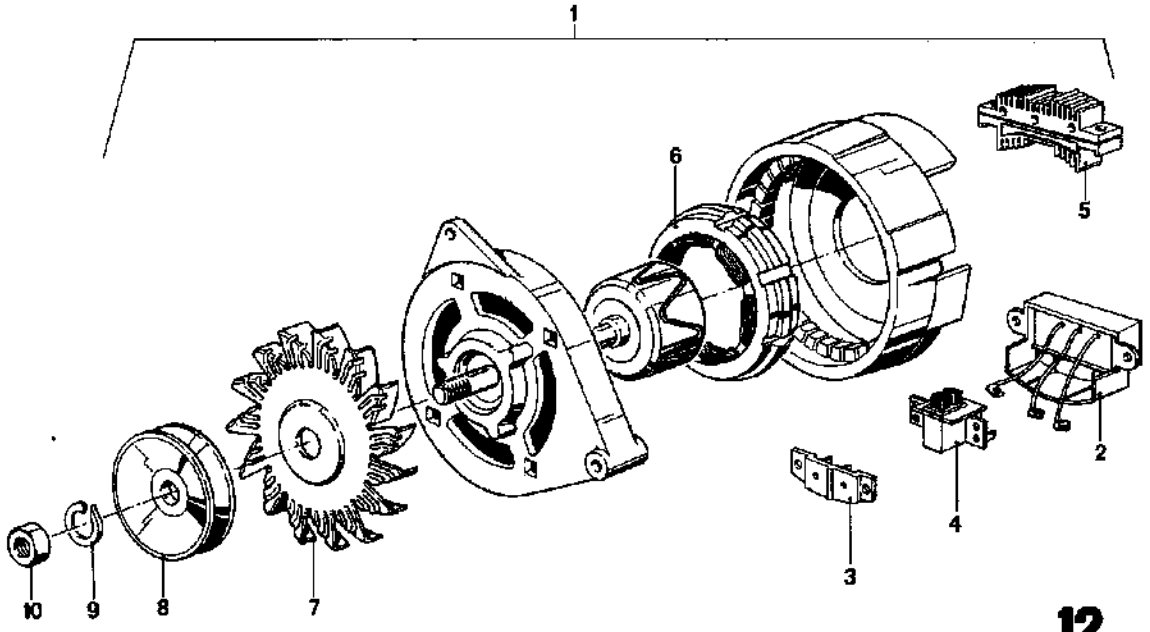


**12/3**
D 35/D 50
2/85

| 12/3 2/85 | | | | | | | | | |
|---|---|---|---|---|---|---|---|---|---|
| Nr. | Teile-Nummer | Symbol | Benennung | | D 35–1 | D 35–2 | D 50–1 | D 50–2 | Bemerkung |
| 1 | 12 31 1 333 935 | | kpl. 14 V 75 A Generator / Generator / Générateur / Generator / Generatore | | 1 | 1 | 1 | 1 | Motorola |
| 2 | 12 31 1 333 937 | | Regler / Regulator / Régulateur / Regulator / Regulatore | | 1 | 1 | 1 | 1 | |
| 3 | 12 31 1 334 010 | | Relaisplatte / Relay plate / Plaque de relais / Reläplatta / Base di relè | | 1 | 1 | 1 | 1 | |
| 4 | 12 31 1 334 011 | | Kohlenhalter / Carbon holder / Support de charbon / Kolhållare / Portacarboncini | | 1 | 1 | 1 | 1 | |
| 5 | 12 31 1 334 012 | | Diodenplatte / Diodeplate / Porte-diodes / Diodplatta / Placca di diodi | | 1 | 1 | 1 | 1 | |
| 6 | 12 31 1 334 013 | | Ständer / Stator / Stator / Stator / Statore | | 1 | 1 | 1 | 1 | |
| 7 | 12 31 1 333 938 | | Lüfter / Fam / Ventilateur / Ventilator / Ventilatore | | 1 | 1 | 1 | 1 | |
| 8 | 12 31 1 333 939 | | Riemenscheibe / Pulley / Poulie / Rmskiva / Puleggia | | 1 | 1 | 1 | 1 | |
| 9 | 07 11 9 933 149 | | B 14 Federring / Spring lock washer / Rondelle élastique / Fjäderbricka / Anello elastico | | 1 | 1 | 1 | 1 | |
| 10 | 07 11 9 921 631 | | 8 KT MU M 14 × 1,5 | | 1 | 1 | 1 | 1 | |

Anlasser
Starter
Démarreur
Startmotor
Motorino d'avviamento

BMW D 35 / D 50

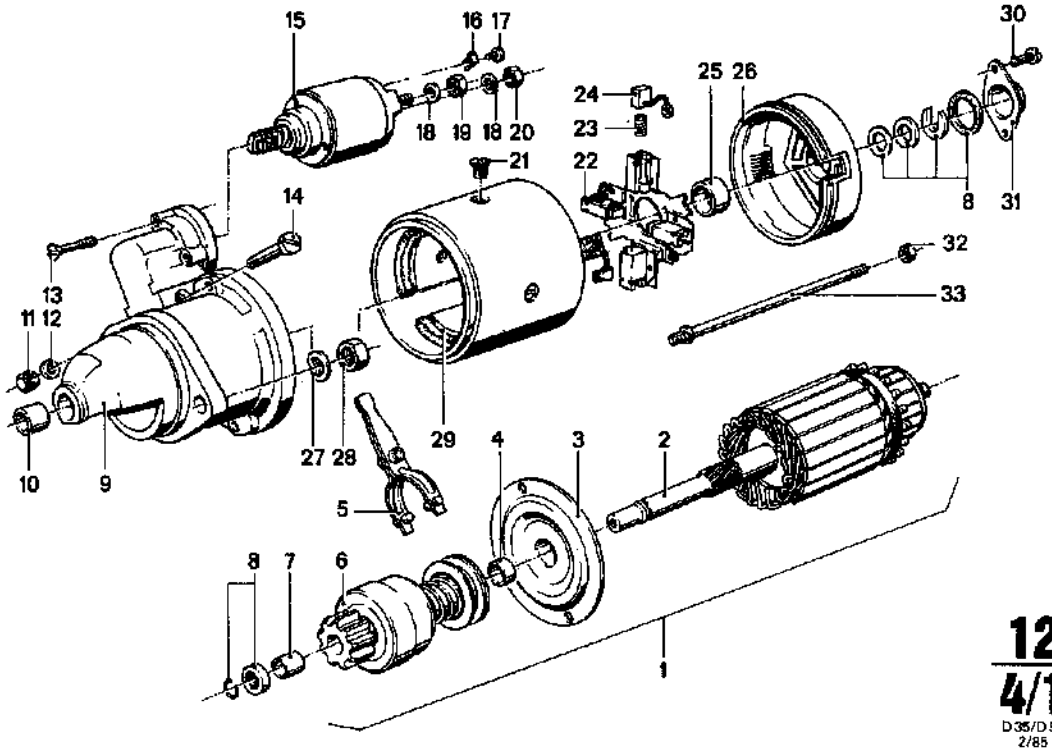


12
4/1
D35/D50
2/85

| 12 4/1 | 2/85 | | | | | | | | |
|---|---|---|---|---|---|---|---|---|---|
| Nr. | Teile-Nummer | Symbol | Benennung | D 35 – 1 | D 35 – 2 | D 50 – 1 | D 50 – 2 | | Bemerkung |
| 1 | 12 41 1 329 906 | | 12 V 1,9 kW Anlasser / Starter / Démarreur / Startmotor / Motorino d'avviamento | 1 | 1 | 1 | 1 | | |
| 2 | 12 41 1 331 494 | | Anker / Armature / Stateur / Ankare / Indotto | 1 | 1 | 1 | 1 | | |
| 3 | 12 41 1 331 515 | | Zwischenlager / Pillow block / Palier intermédiaire / Mellanlager / Supporto intermedio | 1 | 1 | 1 | 1 | | |
| 4 | 12 41 1 331 516 | | Sinterbuchse / Sinter bushing / Douille frittée / Sinterbussing / Bussola sinterizzata | 1 | 1 | 1 | 1 | | |
| 5 | 12 41 1 331 512 | | Gabelhebel / Fork-end lever / Levier à chape / Gaffelarm / Forcella | 1 | 1 | 1 | 1 | | |
| 6 | 12 41 1 331 495 | | Freilaufgetriebe / Free-wheeling gear assembly / Réducteur à roue libre / Frihjulsväxel / Ruota libera | 1 | 1 | 1 | 1 | | |
| 7 | 12 41 1 331 496 | | Sinterbuchse / Sinter bushing / Douille frittée / Sinderbussning / Bussola sinterizzata | 1 | 1 | 1 | 1 | | |
| 8 | 12 41 1 331 511 | RS | Teilesatz / Assembly / Jeu de pieces / Sats delar / Corredo parti | 1 | 1 | 1 | 1 | | |
| 9 | 12 41 1 331 514 | | Antriebslager / Drive bearing / Roulement de trans. / Drivlager / Cuscinetto di comando | 1 | 1 | 1 | 1 | | |
| 10 | 12 41 1 331 497 | | Sinterbuchse / Sinter bushing / Douille frittée / Sinterbussning / Bussola sinterizzata | 1 | 1 | 1 | 1 | | |
| 11 | 07 11 9 921 077 | | 6 KT MU M 8 | 1 | 1 | 1 | 1 | | |
| 12 | 07 11 9 932 095 | | B 8 Federscheibe / Spring washer / Rondelle élastique / Fjäderbricka / Rosetta elastico | 1 | 1 | 1 | 1 | | |
| 13 | 12 41 1 331 500 | | SK SHR | 3 | 3 | 3 | 3 | | |
| 14 | 12 41 1 331 498 | | SK SHR | 1 | 1 | 1 | 1 | | |
| 15 | 12 41 1 331 513 | | Magnetschalter / Magnetic switch / Commutateur à relais / Magnetbrytare / Interruttore magnet | 1 | 1 | 1 | 1 | | |
| 16 | 12 41 1 331 509 | | Klemmbügel / Clamp strap / Etrier de serrage / Klämbygel / Staffa di serraggio | 1 | 1 | 1 | 1 | | |
| 17 | 07 11 9 919 362 | | ZYL SHR M 4 | 1 | 1 | 1 | 1 | | |
| 18 | 07 11 9 933 096 | | B 8 Federscheibe / Spring washer / Rondelle élastique / Fjäderbricka / Rosetta elastico | 2 | 2 | 2 | 2 | | |
| 19 | 07 11 9 922 113 | | 6 KT MU M 10 | 1 | 1 | 1 | 1 | | |
| 20 | 07 11 9 921 098 | | 6 KT MU M 10 | 1 | 1 | 1 | 1 | | |
| 21 | 12 41 1 354 571 | | SK SHR | 4 | 4 | 4 | 4 | | |

Kabelbaum – Motor
Cable harness – Engine
Faisceau de câbles – Moteur
Kabelsträng – Motor
Cavi fasciati del motore



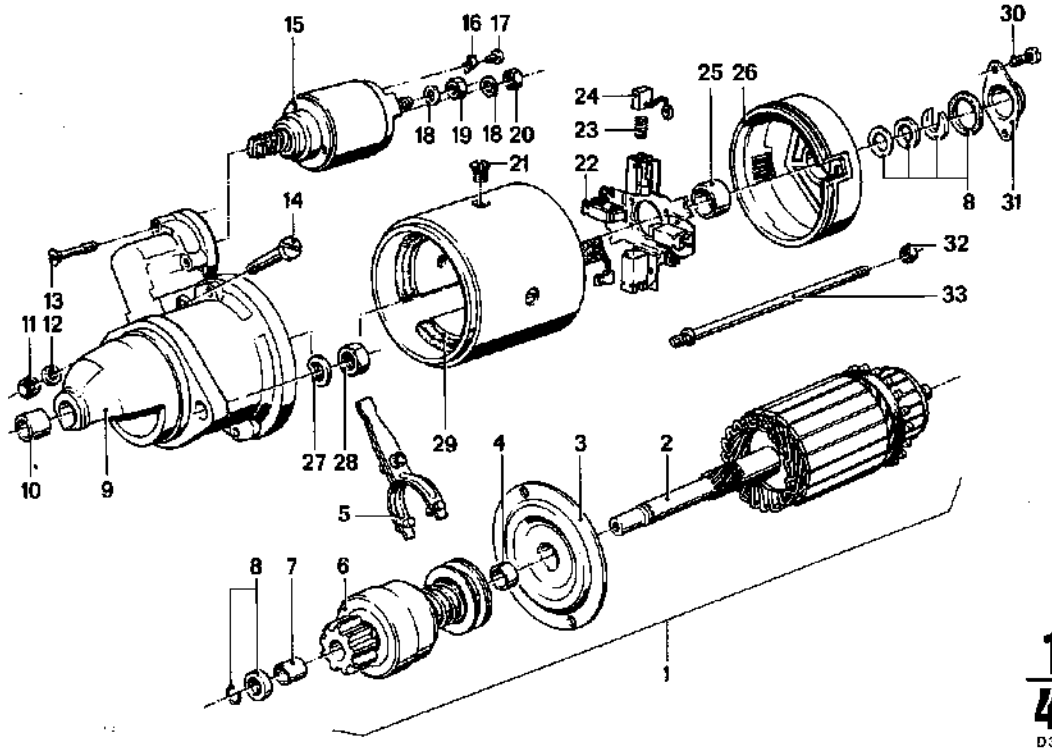


**12 / 4/2**
D 35/D 50
2/85

**12 / 4/2** 2/85

| Nr. | Teile-Nummer | Symbol | Benennung | D 35 – 1 | D 35 – 2 | D 50 – 1 | D 50 – 2 | Bemerkung |
|---|---|---|---|---|---|---|---|---|
| 22 | 12 41 1 331 503 | | Bürstenhalter / Brush-holder / Porte-balais / Borsthållare / Portaspazzola | 1 | 1 | 1 | 1 | |
| 23 | 12 41 1 331 504 | | Druckfeder / Return spring / Ressort de pression / Tryckfjäder / Molla di compressione | 4 | 4 | 4 | 4 | |
| 24 | 12 41 1 331 510 | | Kohlebürstensatz / Brush set / Jeu de balais de charbon / Sats kolborstar / Corredo spazz. carbone | 1 | 1 | 1 | 1 | |
| 25 | 12 41 1 331 506 | | Sinterbuchse / Sinter bushing / Douille frittée / Sinterbussning / Bussola sinterizzata | 1 | 1 | 1 | 1 | |
| 26 | 12 41 1 331 505 | | Kommutatorlager / Collector bearing / Palier d.collecteur / Kommutatorlager / Supporto del collettore | 1 | 1 | 1 | 1 | |
| 27 | 07 11 9 933 127 | | B 12 Federring / Spring lock washer / Rondelle élastique / Fjäderbricka / Anello elastico | 2 | 2 | 2 | 2 | |
| 28 | 07 11 9 922 133 | | 6 KT MU M 12 | 2 | 2 | 2 | 2 | |
| 29 | 12 41 1 331 501 | | Erregerwicklung / Field coil / Bobinage d'excitation / Lindning / Avvolgimento eccitat. | 1 | 1 | 1 | 1 | |
| 30 | 12 41 1 331 517 | | ZYL SHR M 5 | 2 | 2 | 2 | 2 | |
| 31 | 12 41 1 331 508 | | Kapsel / Capsule / Capsule / Kapsel / Capsula | 1 | 1 | 1 | 1 | |
| 32 | 07 11 9 922 058 | | 6 KT MU M 6 | 2 | 2 | 2 | 2 | |
| 33 | 12 41 1 331 499 | | ST! SHR | 2 | 2 | 2 | 2 | |

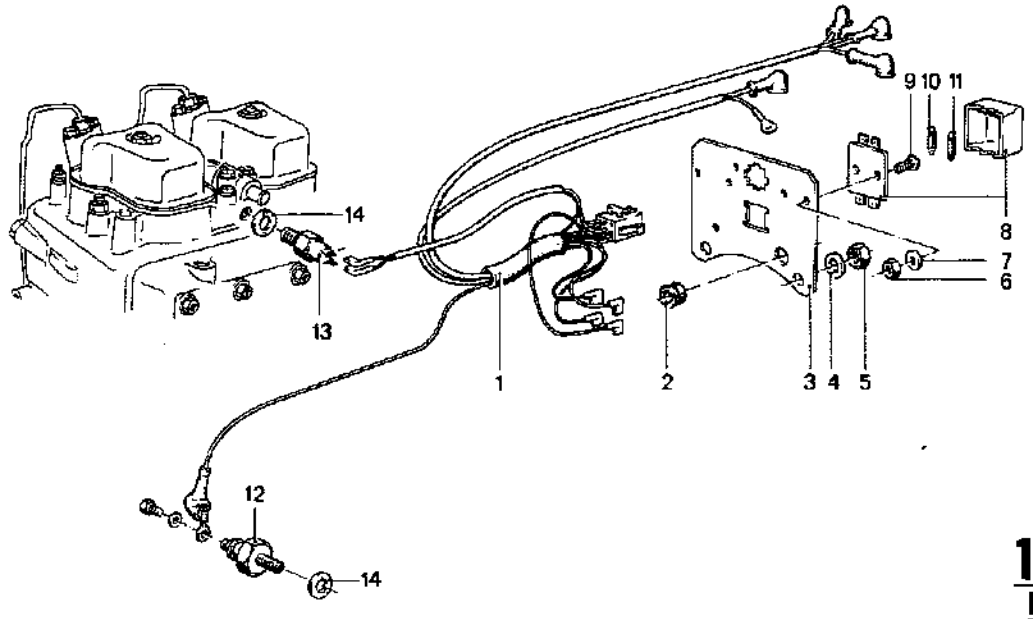


**12/5**
D 35/D 50
2/85

**12/5** 2/86

| Nr. | Teile-Nummer | Symbol | Benennung | D 35 – 1 | D 35 – 2 | D 50 – 1 | D 50 – 2 | Bemerkung |
|---|---|---|---|---|---|---|---|---|
| 1 | 12 51 1 329 998 | | Motor-Kabelbaum / Motor, cable harness / Moteur, harnais de câbles / Motor, kabelboom / Cavi fasciati del motore | 1 | | 1 | | |
| 2 | 12 52 1 329 968 | | Gummitülle / Rubber grommet / Douille en caoutch. / Gummihatt / Boccola di gomma | 1 | | 1 | | |
| 3 | 12 52 1 329 943 | | Halteblech / Retaining plate / Tôle de retenue / Fästplåt / Lamiera di stostegno | 1 | | 1 | | |
| 4 | 07 11 9 931 067 | | A 8,4 Scheibe / Washer / Rondelle / Bricka / Rondella | 2 | | 2 | | |
| 5 | 07 11 9 922 087 | | 6 KT MU M 8 | 2 | | 2 | | |
| 6 | 07 11 9 922 028 | | 6 KT MU M 4 | 2 | | 2 | | |
| 7 | 07 11 9 931 027 | | A 4,3 Scheibe / Washer / Rondella / Bricka / Rondella | 2 | | 2 | | |
| 8 | 61 13 1 353 136 | | Sicherungsdose / Fuse box / Boîte à coupe-circuit / Säkringslåda / Scatola fusibili | 1 | | 1 | | |
| 9 | 07 11 9 907 688 | | LIN SHR M 4 × 12 | 2 | | 2 | | |
| 10 | 61 13 8 760 139 | | 25 A Schmelzeinsatz / Amp fuse link / Bouchon fusible / Smältpropp / Fusibile | 1 | | 1 | | |
| 11 | 61 13 1 331 928 | | 40 A dito | 1 | | 1 | | |
| 12 | 12 61 1 331 930 | | Öldruckschalter / Oil press.sens.switch / Interrup.pres.d'huile / Oljetryckskontakt / Pressostato ad olio | 1 | 1 | 1 | 1 | |
| 13 | 12 62 1 331 929 | | 70° Temperaturschalter / Temperatur switch / Thermostat / Temperaturbrytare / Interruttore termico | 1 | 1 | 1 | 1 | |
| 14 | 07 11 9 963 201 | | DT RG | 2 | 2 | 2 | 2 | |

V12 Engineering
Box 50, Ontario, Canada P0X 1C0
www.bmwmarine.net

Kabelbaum – Motor
Cable harness – Engine
Faisceau de câbles – Moteur
Kabelsträng – Motor
Cavi fasciati del motore

BMW D 35 / D 50

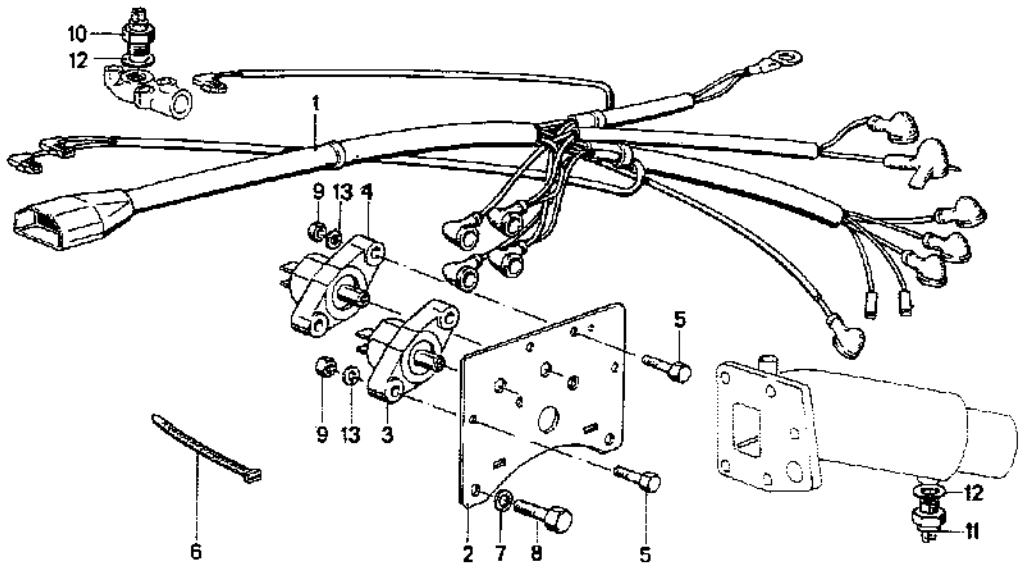


**12/6**
D 35/D 50
2/85

| 12/6 | 2/85 | | | D 35–1 | D 35–2 | D 50–1 | D 50–2 | |
|---|---|---|---|---|---|---|---|---|
| Nr. | Teile-Nummer | Symbol | Benennung | | | | | Bemerkung |
| 1 | a 12 51 1 333 915 | | Kabelbaum-Motor / Cable harness motor / Harnais de câbles moteur / Kabelbom motor / Fascio di cavi motore | 1 | 1 | 1 | 1 | |
| 2 | a 12 52 1 333 917 | | Halteblech / Retaining plate / Tôle de retenue / Fästplåt / Lamiera di stostegno | 1 | 1 | 1 | 1 | |
| 3 | a 61 13 1 331 901 | | 25 A Sicherungsautomat / Automatic fuse / Coupe-circuit automatique / Automatsäkring / Autom. di sicurezza | 1 | 1 | 1 | 1 | |
| 4 | a 61 13 1 329 978 | | 60 A dito | 1 | 1 | 1 | 1 | |
| 5 | 07 11 9 913 089 | | 6 KT SHR M 4 × 18 | 4 | 4 | 4 | 4 | |
| 6 | a 61 13 1 243 092 | | Kabelband / Cable strip / Ruban de câbles / Kabelband / Nastro per cavo | 4 | 4 | 4 | 4 | |
| 7 | a 07 11 9 931 067 | | 8,4 Scheibe / Washer / Rondelle / Bricka / Rondella | 2 | 2 | 2 | 2 | |
| 8 | a 07 11 9 913 627 | | 6 KT SHR M 8 × 18 | 2 | 2 | 2 | 2 | |
| 9 | 07 11 9 922 028 | | 6 KT MU M 4 | 4 | 4 | 4 | 4 | |
| 10 | 12 62 1 334 016 | | Wassertemperatur-Geber / Water temperature transmitter / Trainsmetteur de température d'eau / Trasmettitore di temperatura dell'acqua | | 1 | | 1 | |
| 11 | 12 62 1 331 929 | | 70° Temperaturschalter / Temperatur switch / Thermostat / Temperaturbrytare / Interruttore termico | 1 | 1 | 1 | 1 | |
| 12 | 07 11 9 963 201 | | OT RG A 14 × 18 | 2 | 2 | 2 | 2 | |
| 13 | 07 11 9 931 027 | | A 4,3 Scheibe / Washer / Rondelle / Bricka / Rondella | 4 | 4 | 4 | 4 | |

V12 Engineering
Box 50, Ontario, Canada P0X 1C0
www.bmwmarine.net

a) Mot.-Nr 644–648 / 657 / 661 - -

Kraftstoffregelung
Fuel control
Régulateur de carburant
Bränsleregulator
Regolazione del carburante

BMW D 35,/ D 50

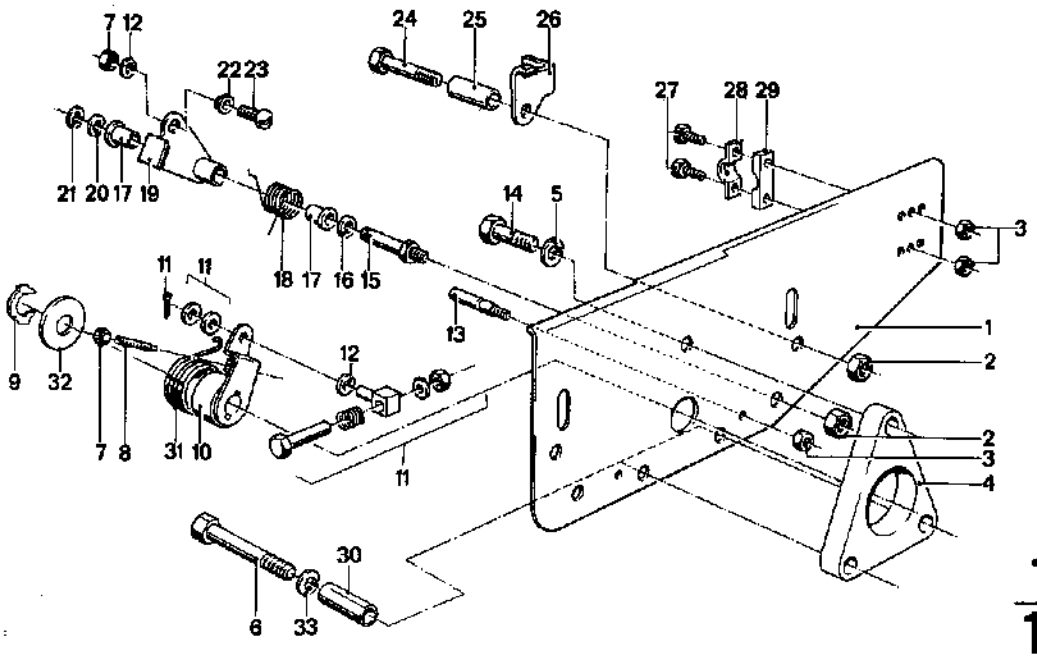


**13**
**1/1**
D 35/D 50
2/85

**13 1/1** 2/85

| Nr. | Teile-Nummer | Symbol | Benennung | D 35–1 | D 35–2 | D 50–1 | D 50–2 | Bemerkung |
|---|---|---|---|---|---|---|---|---|
| 1 | 13 21 1 331 464 | | Halteblech / Fixing plate / Plaque de support / Plåthållare / Lamiera di stostegno | 1 | | 1 | | |
| 2 | 07 11 9 922 087 | | 6KT MU M 8 | 2 | | 2 | | |
| 3 | 07 11 9 922 038 | | 6KT MU M 5 | 3 | | 3 | | |
| 4 | 13 21 1 331 336 | | Distanzplatte / Spacer plate / Plaque entretoise / Distansplatta / Placca distanziatore | 1 | | 1 | | |
| 5 | 07 11 9 933 096 | | B 8 Federscheibe / Spring washer / Rondelle élastique / Fjäderbricka / Rosetta elastico | 2 | | 2 | | |
| 6 | 07 11 9 919 784 | | Zyl. SHR M 8 × 120 | 2 | | 2 | | |
| 7 | 07 11 9 922 058 | | 6KT MU M 6 | 2 | | 2 | | |
| 8 | 13 21 1 329 198 | | Einstellschraube / Adjusting screw / Vis de réglage / Justerskruv / Vite di registrazione | 1 | | 1 | | |
| 9 | 13 21 1 331 467 | | Sicherungsscheibe / Lock washer / Circlip / Låsbricka / Ranella di sicurezza | 1 | 1 | 1 | 1 | |
| 10 | 13 21 1 331 462 | | kpl. Gashebel / Accelerator / Levier d'accélérateur / Gasregleringsspak / Pedale dell'acceleratore | 1 | | 1 | | |
| 11 | 13 21 1 328 524 | | Schaltteile / Shifting parts / Pièces de commande / Kopplingsdetar / Elemento di innesto | 1 | | 1 | | |
| 12 | 07 11 9 931 044 | | A 6,4 Scheibe / Washer / Rondelle / Bricka / Rondella | 4 | | 4 | | |
| 13 | 13 21 1 331 338 | | Anschlagbolzen / Stop pin / Axe de butée / Anslagsbult / Perno di arresto | 1 | | 1 | | |
| 14 | 07 11 9 913 662 | | 6KT SHR M 8 × 30 | 1 | | 1 | | |
| 15 | 13 21 1 329 200 | | Bolzen / Pin / Boulon / Bult / Bullone | 1 | | 1 | | |
| 16 | 13 21 1 329 726 | | Scheibe / Washer / Rondelle / Bricka / Rondella | 1 | | 1 | | |
| 17 | 13 21 1 256 320 | | Büchse / Boushing / Douille / Bussning / Boccola | 2 | | 2 | | |
| 18 | 13 21 1 329 149 | | Schenkelfeder / Leg spring / Ressort de rappel / Skänkelfjäder / Molla a spillo di sicurezza | 1 | | 1 | | |
| 19 | 13 21 1 331 465 | | Anschlagwinkel / Stop angle / Equerre de butée / Anslagsvinkel / Arresto | 1 | | 1 | | |

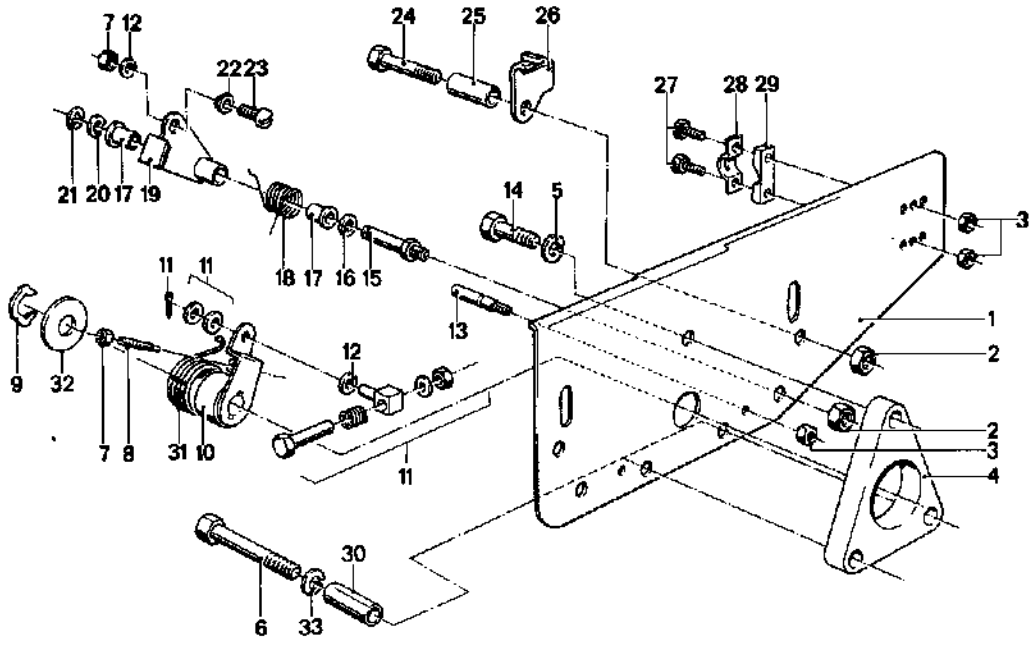


**13**
**1/2**
D35/D50
2/85

**13 1/2** 2/85

| Nr. | Teile-Nummer | Symbol | Benennung | D35-1 | D35-2 | D50-1 | D50-2 | Bemerkung |
|---|---|---|---|---|---|---|---|---|
| 20 | 07 11 9 932 081 | | A 8 Federscheibe / Spring washer / Rondelle élastique / Fjäderbricka / Rosetta elastico | 1 | | 1 | | |
| 21 | 07 11 9 932 852 | | 7 Sicherungsscheibe / Lock washer / Circlip / Låsbricka / Rondella di sicurezza | 1 | | 1 | | |
| 22 | 13 21 1 329 185 | | Klemmhülse / Clamping sleeve / Douille de serrage / Klämhylsa / Boccola di serraggio | 1 | | 1 | | |
| 23 | 13 21 1 329 184 | | Klemmschraube / Clamping screw / Vis de serrage / Klämskruv / Vite di bloccaggio | 1 | | 1 | | |
| 24 | 07 11 9 912 506 | | 6 KT SHR M 8 × 45 | 1 | | 1 | | |
| 25 | 13 21 1 329 186 | | Distanzbuchse / Spacer socket / Douille d'écartement / Distanshylsa / Boccola distanziatore | 1 | | 1 | | |
| 26 | 13 21 1 331 463 | | Haltewinkel / Support angle / Cornière d'appui. / Vinkelstöd / Squadra di sostegno | 1 | | 1 | | |
| 27 | 07 11 9 913 251 | | 6 KT SHR M 5 × 20 | 2 | | 2 | | |
| 28 | 13 21 1 326 574 | | Klemmbügel / Clamp strap / Etrier de serrage / Klämbygel / Staffe di serraggio | 1 | | 1 | | |
| 29 | 13 21 1 331 346 | | Unterlage / Spacer / Joint / Underlägg / Piastrina | 1 | | 1 | | |
| 30 | 13 21 1 329 186 | | Distanzbuchse / Spacer socket / Douille d'écartement / Distanshylsa / Boccola distanziatore | 1 | | 1 | | |
| 31 | 13 21 1 333 626 | | Drehfeder / Torsion spring / Barre de tor / Dragfjäder / Molla girevole | 1 | | 1 | | |
| 32 | 13 21 1 333 625 | | Scheibe / Washer / Rondelle / Bricka / Rondella | 1 | | 1 | | |
| 33 | 07 11 9 931 067 | | A 8,4 Scheibe / Washer / Rondelle / Bricka / Rondella | 1 | | 1 | | |

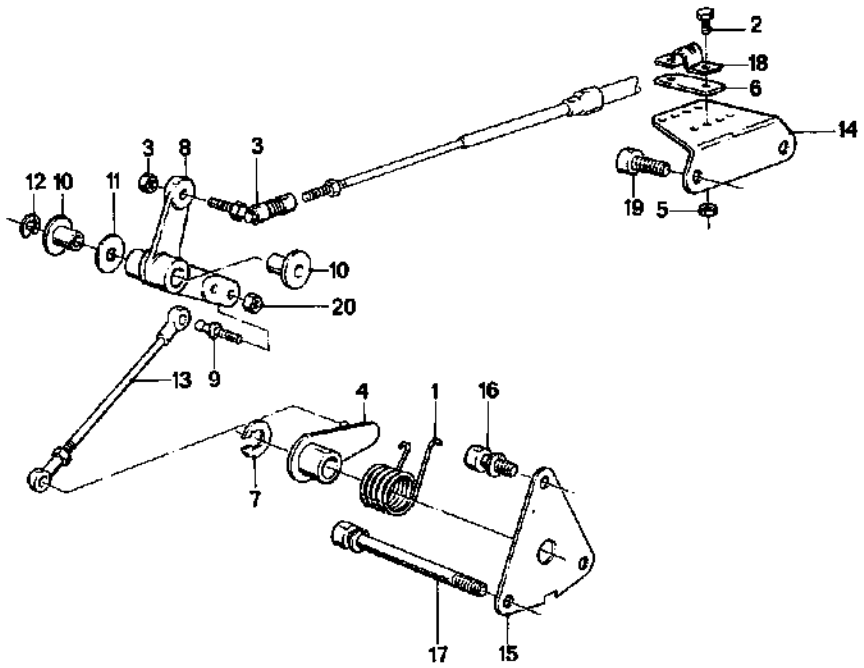




| 13/2 2/85 Nr. | Teile-Nummer | Symbol | Benennung | D35–1 | D35–2 | D50–1 | D50–2 | Bemerkung |
|---|---|---|---|---|---|---|---|---|
| 1 | 13 21 1 333 653 | | Drehfeder / Torsion spring / Barra de tor / Dragfjäder / Molla girevole | 1 | 1 | 1 | 1 | |
| 2 | 07 11 9 913 241 | | 6 KT SHR M 6 × 16 | 2 | 2 | 2 | 2 | |
| 3 | 13 21 1 333 265 | | Kugelgelenk / Globe joint / Joint à rotule / Kulled / Snodo sferico | 1 | 1 | 1 | 1 | |
| 4 | 13 21 1 333 652 | | kpl. Gashebel / Accelerator / Levier d'accélérateur / Gasregeleringspak / Pedale dell'acceleratore | 1 | 1 | 1 | 1 | |
| 5 | 07 12 9 922 700 | | 6 KT MU M 5 | 2 | 2 | 2 | 2 | |
| 6 | 13 21 1 330 287 | | Distanzblech / Spacing plate / Tôle d'écartement / Distansblech / Lamiera distanziatore | 1 | 1 | 1 | 1 | |
| 7 | 13 21 1 331 467 | | Sicherungsscheibe / Lock washer / Circlip / Låsbricka / Ranella di sicurezza | 1 | 1 | 1 | 1 | |
| 8 | 13 21 1 326 421 | | Umlenkhebel / Transmitting lever / Tide de transmission / Överförningsarm / Leva d'inversione | 1 | 1 | 1 | 1 | |
| 9 | 07 11 9 987 302 | | Kugelzapfen / Ball pin / Pivot spherique / Kultapp / Perno sferico | 1 | 1 | 1 | 1 | |
| 10 | 13 21 0 743 138 | | Büchse / Boushing / Douille / Bussning / Boccole | 2 | 2 | 2 | 2 | |
| 11 | 13 11 0 642 194 | | Scheibe / Washer / Rondella / Bricka / Rondella | 1 | 1 | 1 | 1 | |
| 12 | 07 11 9 932 852 | | Sicherungsscheibe / Lock washer / Circlip / Låsbricka / Ranella di sicurezza | 1 | 1 | 1 | 1 | |
| 13 | 13 21 1 333 862 | | kpl. Zugstange / Traction rod / Barre d'attelage / Dragstång / Tirante | 1 | 1 | 1 | 1 | |
| 14 | 13 21 1 333 649 | | Haltewinkel / Support angle / Cornière d'appui / Vinkelstöd / Squadra di sostegno | 1 | 1 | 1 | 1 | |
| 15 | 13 21 1 333 654 | | Spannblech / Clamping sheet / Tôle de serrage / Spännbleck / Lamiera di serraggio | | 1 | | 1 | |
| 16 | 07 11 9 919 939 | | ZYL SHR M 8 × 16 | | 1 | | 1 | |
| 17 | 07 11 9 919 657 | | ZYL SHR M 8 × 70 | | 2 | | 2 | |
| 18 | 13 21 1 326 574 | | Klemmbügel / Clamp strap / Etrier de serrage / Klämbygel / Staffa di serraggio | 1 | 1 | 1 | 1 | |
| 19 | 07 11 9 919 935 | | ZYL SHR M 8 × 18 | | 2 | | 2 | |
| 20 | 07 11 9 922 038 | | 6 KT MU M 5 | 1 | 1 | 1 | 1 | |

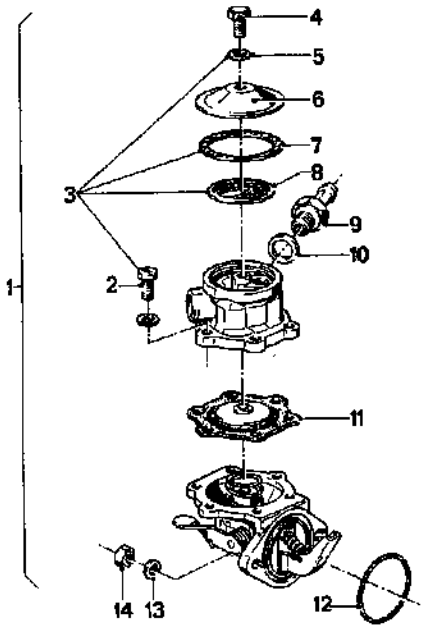


**13/3**
D 35/D 50
2/85

**13/3** 2/85

| Nr. | Teile-Nummer | Symbol | Benennung | D35-1 | D35-2 | D50-1 | D50-2 | Bemerkung |
|---|---|---|---|---|---|---|---|---|
| 1 | 13311333013 | | kpl. Kraftstoffpumpe / Fuel pump / Pompe à carburant / Bränslepump / Pompa alimentazione | 1 | 1 | 1 | 1 | |
| 2 | 13310075779 | | LIN SHR | 6 | 6 | 6 | 6 | |
| 3 | 13311331519 | RS | Teilesatz / Assembly / Jeu de pieces / Sats delar / Corredo parti | 1 | 1 | 1 | 1 | |
| 4 | 13311330075 | | 6KT SHR M 5 x 10 | 1 | 1 | 1 | 1 | |
| 5 | 13311330076 | | DT RG | 1 | 1 | 1 | 1 | |
| 6 | 13311330072 | | Deckel / Cover / Couvercle / Lock / Coperchio | 1 | 1 | 1 | 1 | |
| 7 | 13311330073 | | DT RG | 1 | 1 | 1 | 1 | |
| 8 | 13311330074 | | Kraftstoffilter / Fuel filter / Filtre à carburant / Bränslefilter / Filtro carburante | 1 | 1 | 1 | 1 | |
| 9 | 13311329256 | | Schlauchstutzen / Hose nozzle / Raccord de tuyau / Anslutningsstycke for slang / Raccordo per tubo flessibile | 1 | 1 | 1 | 1 | |
| 10 | 07119963201 | | DT RG A 14 x 18 | 1 | 1 | 1 | 1 | |
| 11 | 13311331042 | | Membrane / Diaphragm / Membrane / Membran / Membrana | 1 | 1 | 1 | 1 | |
| 12 | 13311331562 | | O-Ring / O-ring / Joint torique / O-ring / Anello-O | 1 | 1 | 1 | 1 | |
| 13 | 07119932062 | | A 6 Federscheibe / Spring washer / Rondelle élastique / Fjäderbricka / Rosetta elastico | 2 | 2 | 2 | 2 | |
| 14 | 07119922054 | | 6KT MU M 6 | 2 | 2 | 2 | 2 | |

V12 Engineering
Box 50, Ontario, Canada P0X 1C0
www.bmwmarine.net

Kraftstoffaufbereitung
Fuel preparation
Enrichissement de carburant
Bränsleanrikning
Preparazione del carburante

BMW D 35 / D 50

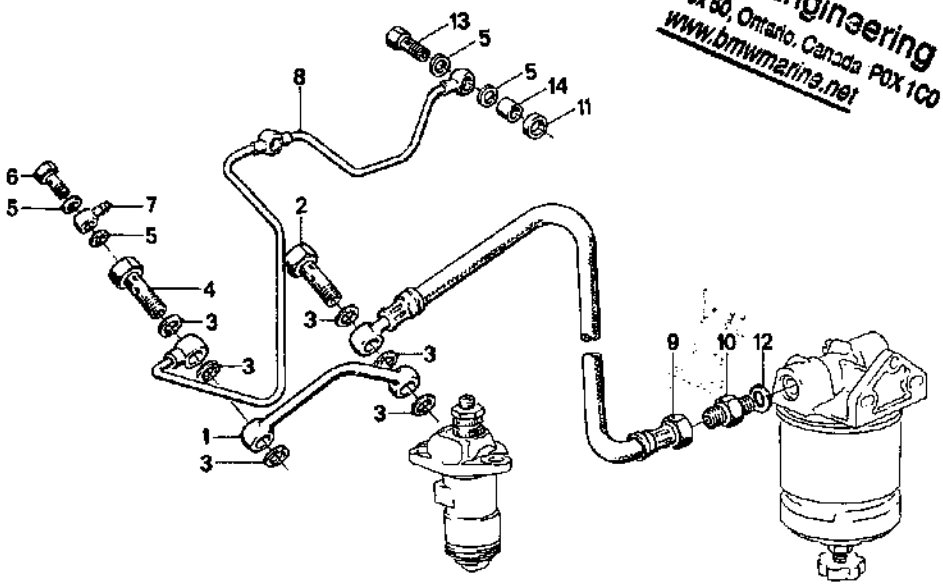


V12 Engineering
Box 60, Ontario, Canada P0X 1C0
www.bmwmarine.net

13
4
D 35
2/85

13/4 2/85

| Nr. | Teile-Nummer | Symbol | Benennung | D 35–1 | D 35–2 | D 50–1 | D 50–2 | Bemerkung |
|---|---|---|---|---|---|---|---|---|
| 1 | 13 31 1 333 310 | | Kraftstoffleitung / Fuel piping / Tuyau de carburant / Bränsleledning / Conduttura carburante | 1 | 1 | | | |
| 2 | 13 31 1 333 600 | | Doppelhohlschraube / Double banjo bolt / Vis creuse double / Dubbelhålskruv / Doppia vite cava | 1 | 1 | 1 | 1 | |
| 3 | 07 11 9 963 129 | | DT RG A 12 | 6 | 6 | 9 | 9 | |
| 4 | 13 31 1 333 601 | | Doppelhohlschraube / Double banjo bolt / Vis creuse double / Dubbelhålskruv / Doppia vite cava | 1 | 1 | 1 | 1 | |
| 5 | 07 11 9 963 042 | | DT RG A 8 | 6 | 6 | 8 | 8 | |
| 6 | 07 11 9 917 403 | | Hohlschraube / Banjo bolt / Vis creuse / Hålskruv / Vite cava | 1 | 1 | 1 | 1 | |
| 7 | 13 31 1 329 258 | | Ringnippel / Ring nipple / Nipple annulaire / Ringnippel / Nipplo annulare | 1 | 1 | 1 | 1 | |
| 8 | 13 31 1 333 311 | | Kraftstoffleckleitung / Fuel leakage line / Conduite de combustible / Läckageledning, bränsle / Condotto del carburante | 1 | 1 | | | |
| 9 | 13 31 1 331 589 | | Kraftstoffleitung / Fuel piping / Tuyau de carburant / Bränsleledning / Conduttura carburante | 1 | 1 | 1 | 1 | |
| 10 | 07 11 9 972 516 | | Einschraubstutzen / Male connector / Raccord filetè / Skruvstuts / Tronchetto filettato | 1 | 1 | 1 | 1 | |
| 11 | 07 11 9 963 034 | | DT RG A 6 | 2 | 2 | 2 | 2 | |
| 12 | 07 11 9 963 201 | | DT RG A 14 × 18 | 1 | 1 | 1 | 1 | |
| 13 | 13 31 1 333 058 | | Hohlschraube / Banjo bolt / Vis creuse / Hålskruv / Vite cava | 2 | 2 | 3 | 3 | |
| 14 | 13 31 1 333 057 | | Distanzrohr / Spacer tube / Bague de tube / Distansrör / Tubo distanziatore | 2 | 2 | 3 | 3 | |

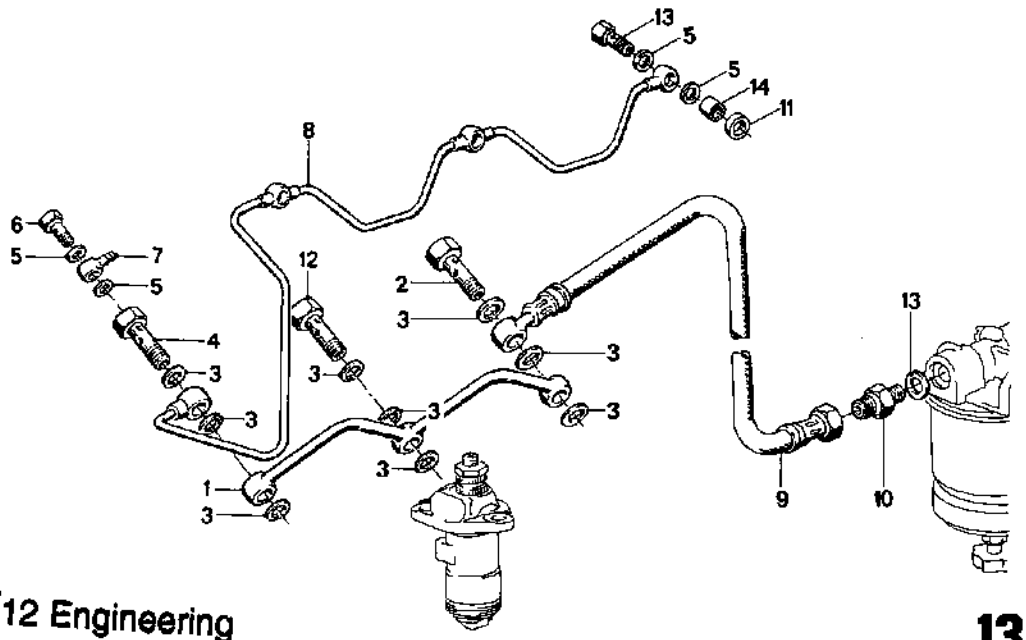


V12 Engineering
Box 50. Ontario, Canada P0X 1C0
www.bmwmarine.net



**13/5** 2/85

| Nr. | Teile-Nummer | Symbol | Benennung | D 35–1 | D 35–2 | D 50–1 | D 50–2 | Bemerkung |
|---|---|---|---|---|---|---|---|---|
| 1 | 13 31 1 333 312 | | Kraftstoffleitung / Fuel piping / Tuyau de carburant / Bränsleledning / Conduttura carburante | | | 1 | 1 | |
| 2 | 13 31 1 333 600 | | Doppelhohlschraube / Double banjo bolt / Vis creuse double / Dubbelhålskruv / Doppia vite cava | 1 | 1 | 1 | 1 | |
| 3 | 07 11 9 963 129 | | DTRGA 12 | 6 | 6 | 9 | 9 | |
| 4 | 13 31 1 333 601 | | Doppelhohlschraube / Double banjo bolt / Vis creuse double / Dubbelhålskruv / Doppia vite cava | 1 | 1 | 1 | 1 | |
| 5 | 07 11 9 963 042 | | DTRGA 8 | 8 | 8 | 8 | 8 | |
| 6 | 07 11 9 917 403 | | Hohlschraube / Banjo bolt / Vis creuse / Hålskruv / Vite cava | 1 | 1 | 1 | 1 | |
| 7 | 13 31 1 329 258 | | Ringnippel / Ring nipple / Nipple annulaire / Ringnippel / Nipplo annulare | 1 | 1 | 1 | 1 | |
| 8 | 13 31 1 333 313 | | Kraftstoffleckleitung / Fuel leakage line / Conduite de combustible / Läckageledning, bränsle / Condotto del carburante | | | 1 | 1 | |
| 9 | 13 31 1 331 589 | | Kraftstoffleitung / Fuel piping / Tuyau de carburant / Bränsleledning / Conduttura carburante | 1 | 1 | 1 | 1 | |
| 10 | 07 11 9 972 516 | | Einschraubstutzen / Male connector / Raccord fileté / Skruvstuts / Tronchetto filettato | 1 | 1 | 1 | 1 | |
| 11 | 07 11 9 963 034 | | DTRGA 6 | 2 | 2 | 3 | 3 | |
| 12 | 13 31 1 333 065 | | Hohlschraube / Banjo bolt / Vis creuse / Hålskruv / Vite cava | 1 | 1 | 1 | 1 | |
| 13 | 07 11 9 963 201 | | DTRGA 14 x 18 | 1 | 1 | 1 | 1 | |
| 14 | 13 31 1 333 068 | | Hohlschraube / Banjo bolt / Vis creuse / Hålskruv / Vite cava | 2 | 2 | 3 | 3 | |
| 15 | 13 31 1 333 057 | | Distanzrohr / Spacer tube / Bague de tube / Distansrör / Tubo distanziatore | 2 | 2 | 3 | 3 | |

Kraftstoffaufbereitung
Fuel preparation
Enrichissement de carburant
Bränsleanrikning
Preparazione del carburante

BMW D 35 / D 50

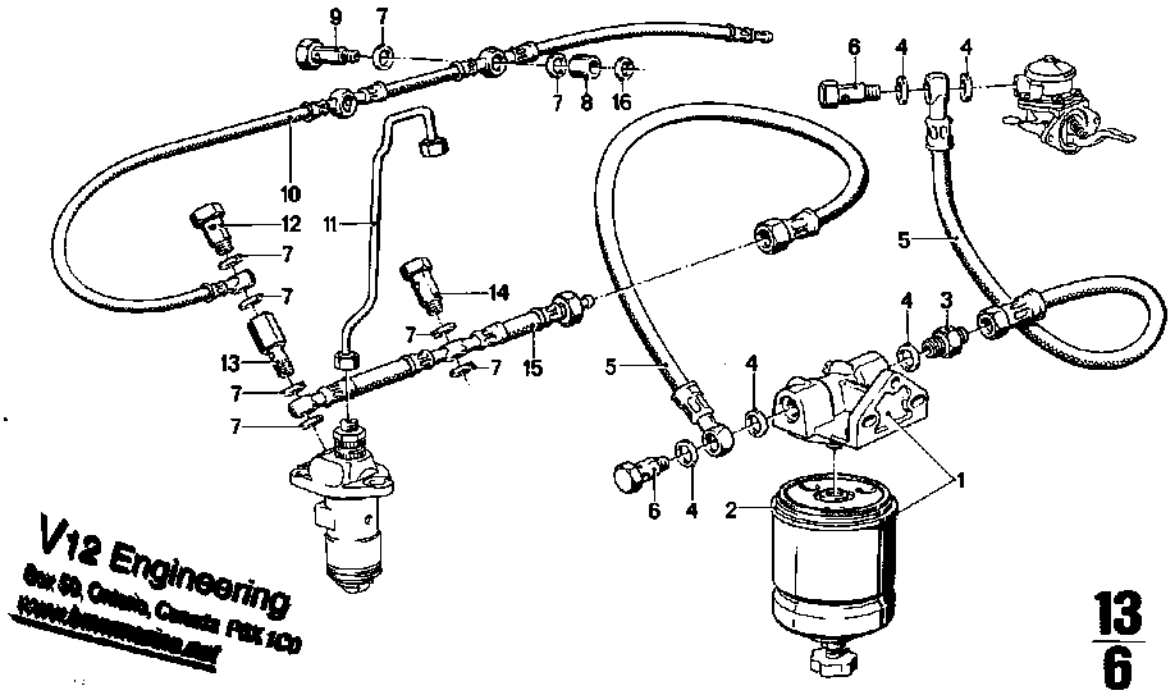


V12 Engineering
Box 50, Ontario, Canada P8X 1C0
www.bmwmagazine.net

13
6
D 35
2/85

| 13/6 2/85 | | | | | | | | | |
|---|---|---|---|---|---|---|---|---|---|
| Nr. | Teile-Nummer | Symbol | Benennung | D 35 – 1 | D 35 – 2 | D 50 – 1 | D 50 – 2 | | Bemerkung |
| 1 | 13 32 1 329 272 | | Kraftstoffilter / Fuel filter / Filtre à carburant / Bränslefilter / Filtro carburante | 1 | 1 | 1 | 1 | | |
| 2 | 13 32 1 329 270 | | Wechselfilter / Easy-change filter / Filtre interchangeable / Växelfilter / Filtro secondario | 1 | 1 | 1 | 1 | | |
| 3 | 07 11 9 972 516 | | Einschraubstutzen / Male connector / Raccord fileté / Skruvstuts / Tronchetto filettato | 1 | 1 | 1 | 1 | | |
| 4 | 07 11 9 963 201 | | DT RG A 14 × 18 | 6 | 6 | 6 | 6 | | |
| 5 | 13 31 1 331 588 | | Kraftstoffleitung / Fuel piping / Tuyau de carburant / Bränsleledning / Conduttura carburante | 2 | 1 | 2 | 1 | | |
| 6 | 32 41 1 117 181 | | Hohlschraube / Banjo bolt / Vis creuse / Hålskruv / Vite cava | 2 | 2 | 2 | 2 | | |
| 7 | 07 11 9 963 129 | | DT RG A 12 × 15,5 | 9 | | 14 | | | |
| 8 | 13 31 1 333 057 | | Buchse / Bushing / Douille / Bussning / Boccola | 2 | 2 | 3 | 3 | | |
| 9 | 13 31 1 333 058 | | Hohlschraube / Banjo bolt / Vis creuse / Hålskruv / Vite cava | 2 | 2 | 3 | 3 | | |
| 10 | 13 31 1 331 577 | | Kraftstoffleckleitung / Fuel leakage line / Conduite de combustible / Läckageledning, bränsle / Condotto del carburante | 1 | | | | | |
| 11 | 13 53 1 333 128 | | Kraftstoffdruckrohr / Fuel pressure pipe / Tube de refoulement de combustible / Bränsletryckrör / Tubo del carburante sotto pressione | 2 | 2 | 3 | 3 | | |
| 12 | 07 11 9 917 409 | | Hohlschraube / Banjo bolt / Vis creuse / Hålskruv / Vite cava | 1 | | 1 | | | |
| 13 | 13 31 1 333 056 | | Ventilkörper / Valve body / Corpo de soupape / Ventilkropp 0 Corpo valvola | 1 | | 1 | | | |
| 14 | 13 31 1 333 055 | | Hohlschraube / Banjo bolt / Vis creuse / Hålskruv / Vite cava | 1 | 1 | 2 | 2 | | |
| 15 | 13 31 1 331 578 | | Kraftstoffleitung / Fuel piping / Tuyau de carburant / Bränsleledning / Conduttura carburante | 1 | | | | | |
| 16 | 07 11 9 963 034 | | DT RG A 6,5 × 9,5 | 2 | 2 | 3 | 3 | | |

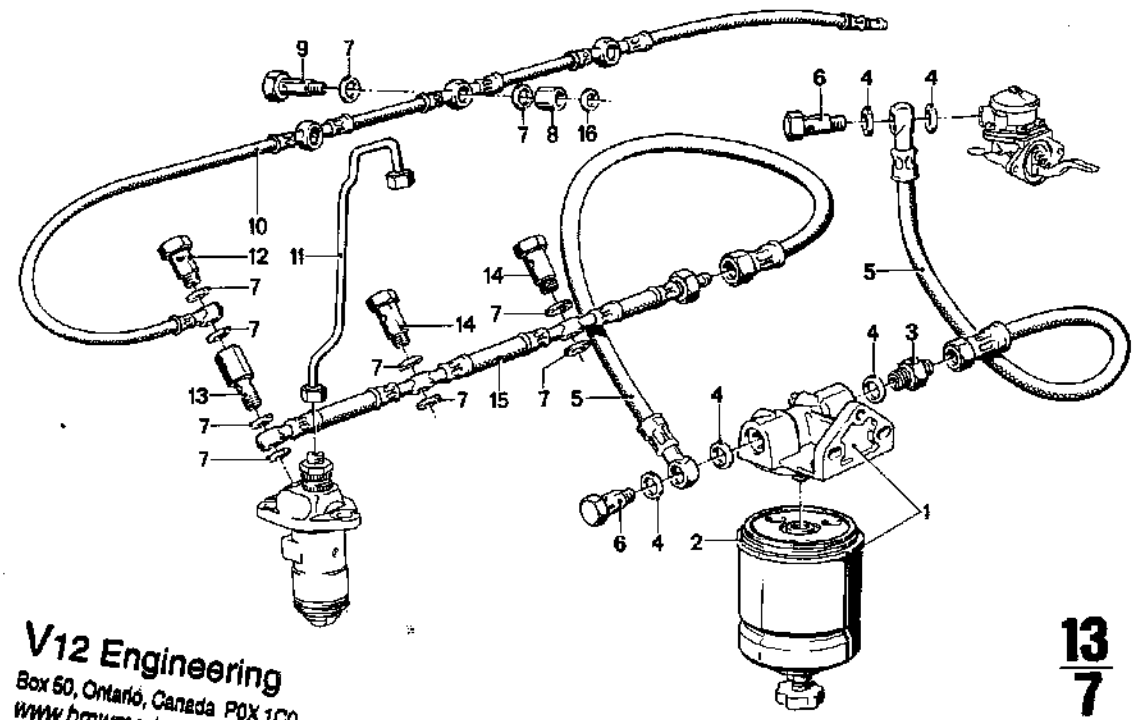


V12 Engineering
Box 50, Ontario, Canada P0X 1C0
www.bmwmarine.net



**13/7** 2/85

| Nr. | Teile-Nummer | Symbol | Benennung | D35-1 | D35-2 | D50-1 | D50-2 | Bemerkung |
|---|---|---|---|---|---|---|---|---|
| 1 | 1332 1 329 272 | | Kraftstoffilter / Fuel filter / Filtre à carburant / Bränslefilter / Filtro carburante | 1 | 1 | 1 | 1 | |
| 2 | 1332 1 329 270 | | Wechselfilter / Easy-change filter / Filtre interchangeable / Växelfilter / Filtro secondario | 1 | 1 | 1 | 1 | |
| 3 | 07 11 9 972 516 | | Einschraubstutzen / Male connector / Raccord fileté / Skruvstuts / Tronchetto filettato | 1 | 1 | 1 | 1 | |
| 4 | 07 11 9 963 201 | | DTRGA 14 × 18 | 6 | 6 | 6 | 6 | |
| 5 | 1331 1 331 588 | | Kraftstoffleitung / Fuel piping / Tuyau de carburant / Bränsleledning / Conduttura carburante | 2 | 1 | 2 | 1 | |
| 6 | 32 41 1 117 181 | | Hohlschraube / Banjo bolt / Vis creuse / Hålskruv / vite cava | 2 | 2 | 2 | 2 | |
| 7 | 07 11 9 963 129 | | DTRGA 12 × 15,5 | 9 | | 14 | | |
| 8 | 1331 1 333 057 | | Distanzrohr / Spacer tube / Bague de tube / Distansrör / Tubo distanziatore | 2 | 2 | 3 | 3 | |
| 9 | 1331 1 333 058 | | Hohlschraube / Banjo bolt / Vis creuse / Hålskruv / Vite cava | 2 | 2 | 3 | 3 | |
| 10 | 1331 1 331 575 | | Kraftstoffleckleitung / Fuel leakage line / Conduite de combustible / Läckageledning, bränsle / Condotto del carburante | | | 1 | | |
| 11 | 1353 1 333 128 | | Kraftstoffdruckrohr / Fuel pressure pipe / Tube de refoulement de combustible / Bränsletryckrör / Tubo del carburante sotto pressione | 2 | 2 | 3 | 3 | |
| 12 | 1331 1 333 387 | | Hohlschraube / Banjo bolt / Vis creuse / Hålskruv / Vite cava | 1 | | 1 | | |
| 13 | 1331 1 333 056 | | Ventilkörper / Valve body / Corpo de soupape / Ventilkropp / Corpo valvola | 1 | | 1 | | |
| 14 | 1331 1 333 055 | | Hohlschraube / Banjo bolt / Vis creuse / Hålskruv / Vite cava | 1 | | 2 | 2 | |
| 15 | 1331 1 331 576 | | Kraftstoffleitung / Fuel piping / Tuyau de carburant / Bränsleledning / Conduttura carburante | | | 1 | | |
| 16 | 07 11 9 963 034 | | DTRGA 6,5 × 9,5 | 2 | 2 | 3 | 3 | |

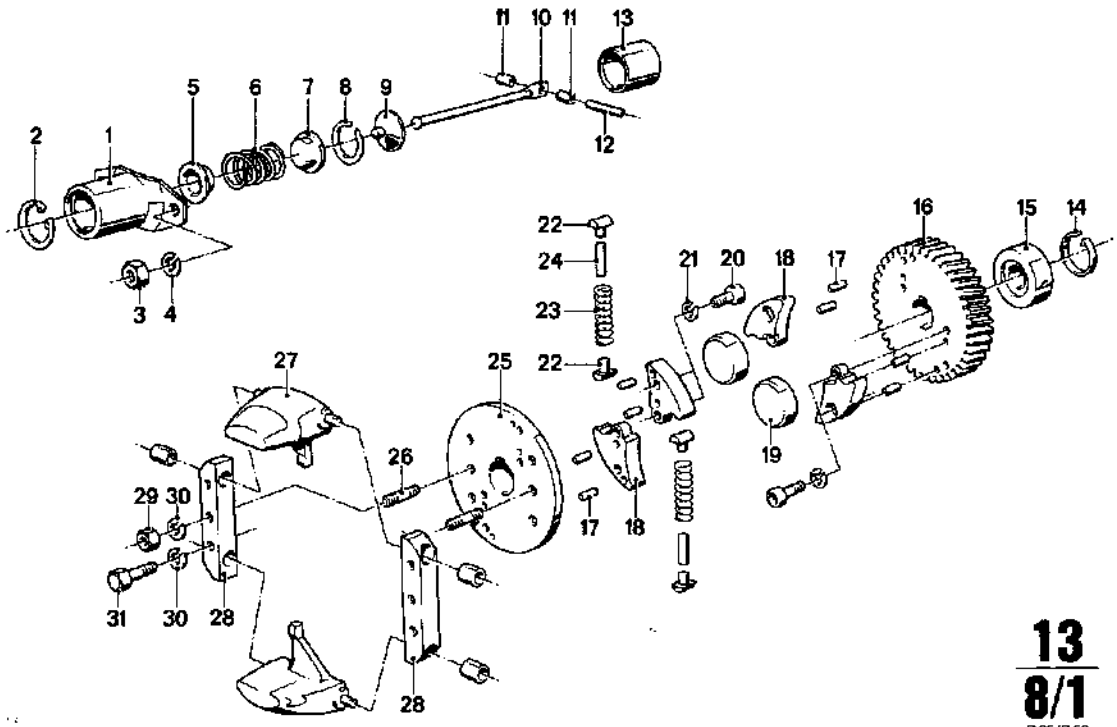


**13/8/1**
D35/D50
2/85

| 13/8/1 | 2/85 | | | | | | | | |
|---|---|---|---|---|---|---|---|---|---|
| Nr. | Teile-Nummer | Symbol | Benennung | | D 35 – 1 | D 35 – 2 | D 50 – 1 | D 50 – 2 | Bemerkung |
| 1 | 1341 1 333 092 | | Federbrücke / Spring bridge / Etrier élastique / Fjäderbrygga / Ponte elastico | | 1 | 1 | 1 | 1 | |
| 2 | 07 11 9 934 650 | | 32 × 1,2 Sicherungsring / Snap ring / Circlip / Låsring / Anello di sicurezza | | 1 | 1 | 1 | 1 | |
| 3 | 07 11 9 922 087 | | 6 KT MU M 8 | | 2 | 2 | 2 | 2 | |
| 4 | 07 11 9 933 096 | | 8 Federring / Spring lock washer / Rondelle élastique / Fjäderbricka / Anello elastico | | 6 | 6 | 6 | 6 | |
| 5 | 1341 1 333 101 | | Federteller / Spring plate / Disque de ressort / Fjäderbricka / Scodellino | | 1 | 1 | 1 | 1 | |
| 6 | 1341 1 333 100 | | Reglerfeder / Regulator spring / Ressort de régulateur / Regulatorfjäder / Molla regolatrice | | 1 | 1 | 1 | 1 | |
| 7 | 1341 1 333 099 | | Zentrierscheibe / Centring disk / Rondelle de centrage / Centrerskiva / Rondella di centraggio | | 1 | 1 | 1 | 1 | |
| 8 | 07 11 9 933 528 | | B 26 Sprengring / Retaining ring / Rondelle grower / Stoppring / Anello elastico | | 1 | 1 | 1 | 1 | |
| 9 | 1341 1 333 098 | | Federteller / Spring plate / Disque de ressort / Fjäderbricka / Scodellino | | 1 | 1 | 1 | 1 | |
| 10 | 1341 1 333 093 | | Zugstab / Drawbar / Tige de traction / Dragstång / Tirante | | 1 | 1 | 1 | 1 | |
| 11 | 1341 1 333 094 | | Rollhülse / Roller sleeve / Douille de roulement / Rullhylsa / Bussola di rotolamento | | 2 | 2 | 2 | 2 | |
| 12 | 1341 1 333 095 | | ZYL STI | | 1 | 1 | 1 | 1 | |
| 13 | 1341 1 333 097 | | Federhülse / Spring sleeve / Goupille élastique / Fjäderhylsa / Bussola della molla | | 1 | 1 | 1 | 1 | |
| 14 | 1341 1 333 096 | | Feder / Spring / Ressort / Fjäder / Molla | | 1 | 1 | 1 | 1 | |
| 15 | 11 27 1 331 873 | | Lager / Bearing / Palier / Lager / Supporto | | 1 | 1 | 1 | 1 | |
| 16 | 1341 1 333 085 | | Zahnrad / Toothed wheel / Roue dentée / Kugghjul / Ruota dentata | | 1 | 1 | 1 | 1 | |
| 17 | 07 11 9 942 034 | | ZYL STI M 6 × 8 | | 8 | 8 | 8 | 8 | |
| 18 | 1341 1 333 086 | | Kurvenbahn / Curved track / Chemin de roulement incurvé / Kurvbana / Traiettoria curvilinea | | 4 | 4 | 4 | 4 | |
| 19 | 1341 1 333 088 | | Fliehgewicht / Flyweight / Masselotte / Centrifugalvikt / Peso centrifugo | | 2 | 2 | 2 | 2 | |

Spritzverstellung
Injection timing
Avance à l'injection
Sprutomställning
Regolazione dell'iniezione

BMW D 35 / D 50

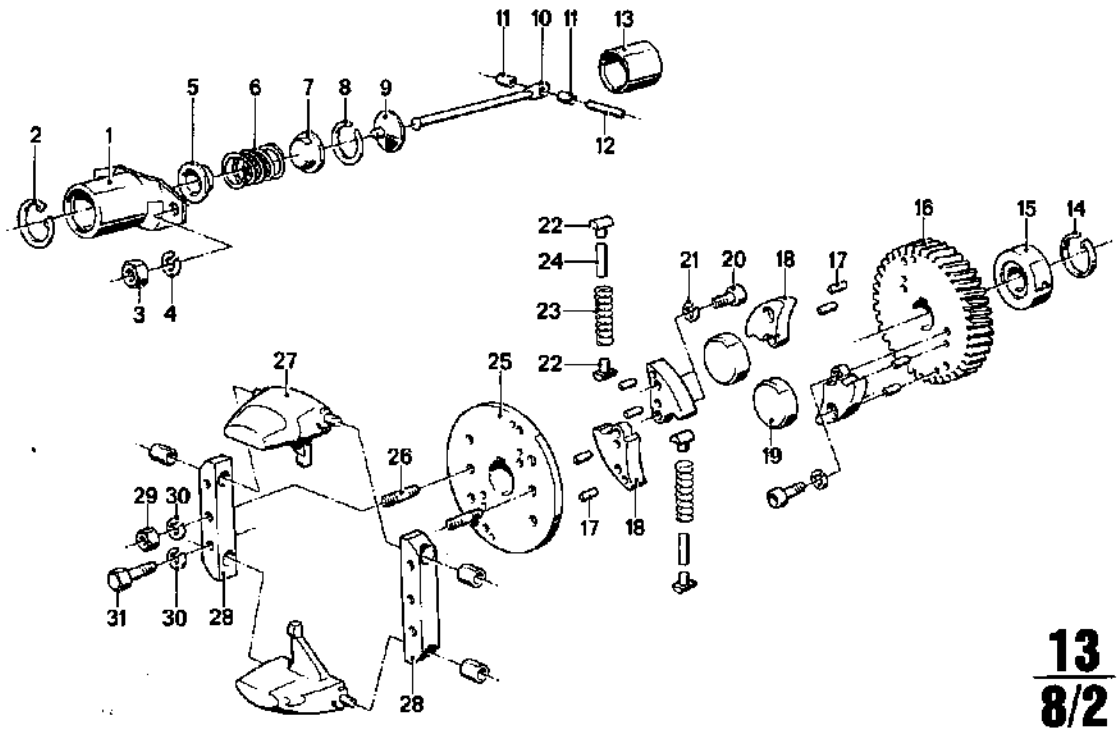


**13**
**8/2**
D 35/D 50
2/85

| 13 8/2 2/85 | | | | D 35-1 | D 35-2 | D 50-1 | D 50-2 | |
|---|---|---|---|---|---|---|---|---|
| Nr. | Teile-Nummer | Symbol | Benennung | | | | | Bemerkung |
| 20 | 07 11 9 919 738 | | ZYLSHR M 6 x 18 | 8 | 8 | 8 | 8 | |
| 21 | 07 11 9 933 082 | | 6 Federring / Spring lock washer / Rondelle élastique / Fjäderbricka / Anello elastico | 8 | 8 | 8 | 8 | |
| 22 | 13 41 1 333 087 | | Druckstück / Thrust fitting / Pièce de pression / Tryckstycke / Elemento di pressione | 4 | 4 | 4 | 4 | |
| 23 | 13 41 1 333 089 | | Druckfeder / Return spring / Ressort de pression / Tryckfjäder / Molla di compressione | 2 | 2 | 2 | 2 | |
| 24 | 13 41 1 333 090 | | Anschlag / Bumper / Pièce de butée / Anslag / Arresto | 2 | 2 | 2 | 2 | |
| 25 | 13 41 1 333 084 | | Tragscheibe / Support disk / Rondelle-support / Bärande skiva / Rondella di supporto | 1 | 1 | 1 | 1 | |
| 26 | 07 11 9 909 458 | | STI SHR M 8 x 30 | 2 | 2 | 2 | 2 | |
| 27 | 13 41 1 333 091 | | Reglergewicht / Governor weight / Masselotte / Regulatorvikt / Peso centrifugo del regolatore | 2 | 2 | 2 | 2 | |
| 28 | 13 41 1 333 082 | | Halter / Support / Support / Fäste / Sostegno | 2 | 2 | 2 | 2 | |
| 29 | 07 11 9 922 087 | | 6 KT MU M 8 | 2 | 2 | 2 | 2 | |
| 30 | 07 11 9 933 241 | | 8 Federring / Spring lock washer / Rondelle élastique / Fjäderbricka / Anello elastico | 6 | 6 | 6 | 6 | |
| 31 | 07 11 9 913 657 | | 6 KT SHR M 8 x 25 | 4 | 4 | 4 | 4 | |

**Drehzahlregler**
**Governor**
**Régulateur de régime**
**Varvtalsregulator**
**Regolatore del numero di giri**

BMW D 35 / D 50

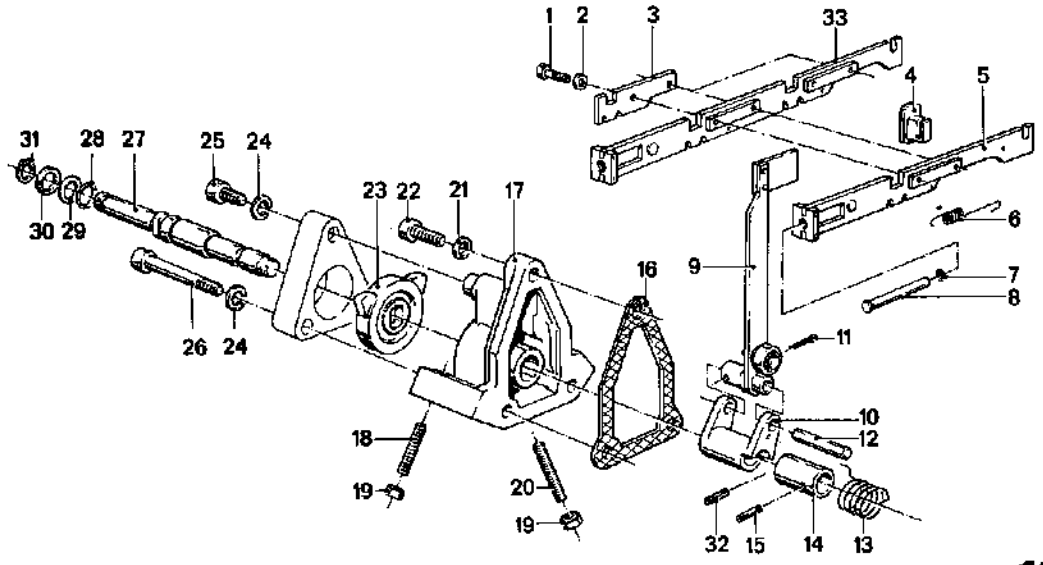


**13**
**9/1**
D 35/D 50
2/85

| 13 9/1 | 2/85 | | | | | | | | |
|---|---|---|---|---|---|---|---|---|---|
| Nr. | Teile-Nummer | Symbol | Benennung | D 35 – 1 | D 35 – 2 | D 50 – 1 | D 50 – 2 | | Bemerkung |
| 1 | 07 11 9 913 209 | | 6 KT SHR M 4 × 7 | 2 | 2 | 4 | 4 | | |
| 2 | 07 11 9 932 033 | | 4 Federscheibe / Spring washer / Rondelle élastique / Fjäderbricka / Rosetta elastico | 2 | 2 | 4 | 4 | | |
| 3 | 1341 1 333 104 | | Stellplatte / Setting plate / Plaque de réglage / Ställplatta / Piastra di regolazione | 1 | 1 | 2 | 2 | | |
| 4 | 1341 1 333 105 | | Reglerstangenführung / Governor linkage guide / Guide de crémaillère / Reglerstångsgejd / Guida dell'asta regolatrice | 1 | 1 | 1 | 1 | | |
| 5 | a 1341 1 333 103 | | kpl. Reglerstange / Governor linkage / Crémaillère / Reglerstång / Asta regolatrice | 1 | 1 | | | | |
| | b 1341 1 763 351 | | dito | 1 | 1 | | | | |
| 6 | 1341 1 333 107 | | Zugfeder / Draw spring / Ressort de rappel / Dragfjäder / Molla trattiva | 1 | 1 | 1 | 1 | | |
| 7 | 1341 1 333 108 | | O-Ring / O-ring / Joint torique / O-ring / Anello-O | 1 | | 1 | | | |
| 8 | 1341 1 333 106 | | Führung / Guide / Guide / Gejd / Guida | 1 | | 1 | | | |
| 9 | 1341 1 333 071 | | kpl. Reglerhebel / Governor lever / Levier de régulateur / Regleringsspak / Leva di regolazione | 1 | 1 | 1 | 1 | | |
| 10 | 1341 1 333 254 | | Gabel / Fork / Chape / Gaffel / Forcella | 1 | 1 | 1 | 1 | | |
| 11 | 07 11 9 945 115 | | 2 × 22 Splint / Cotter pin / Goupille fendue / Splint / Copiglia | 1 | 1 | 1 | 1 | | |
| 12 | 1341 1 333 072 | | Bolzen / Pin / Boulen / Bult / Bullone | 1 | 1 | 1 | 1 | | |
| 13 | 1341 1 333 068 | | Feder / Spring / Ressort / Fjäder / Molla | 1 | | 1 | | | |
| 14 | 1341 1 333 067 | | Hülse / Sleeve / Douille / Hylsa / Boccola | 1 | 1 | 1 | 1 | | |
| 15 | 07 11 9 941 365 | | 4 × 16 Spannhülse / Clamping sleve / Douille de serrage / Spännhylsa / Boccola a tache | 1 | 1 | 1 | 1 | | |
| 16 | 1341 1 333 069 | | Dichtung / Seal / Garniture / Packning / Guarnizione | 1 | 1 | 1 | 1 | | |
| 17 | 1341 1 333 062 | | Lagerbock / Support / Support de palier / Lagerbock / Cavalletto d. supporto | 1 | | 1 | | | |
| 18 | 1341 1 333 073 | | GEWSTI M 8 × 35 | 1 | 1 | 1 | 1 | | |
| 19 | 07 11 9 922 082 | | 6 KT MU M 8 | 2 | 2 | 2 | 2 | | |
| 20 | 1341 1 329 369 | | GEWSTI M 8 × 50 | 1 | 1 | 1 | 1 | | |
| 21 | 07 11 9 963 042 | | DT RG A 8 × 11,5 | 1 | 1 | 1 | 1 | | |
| 22 | 07 11 9 919 978 | | ZYL SHR M 8 × 25 | 1 | 1 | 1 | 1 | | |
| 23 | 1341 1 333 065 | | Anschlag / Bumper / Pièce de butée / Anslag / Arresto | 1 | | 1 | | | |
| 24 | 07 11 9 933 096 | | 8 Federring / Spring lockwasher / Rondelle élastique / Fjäderbricka / Anello elastico | 3 | | 3 | | | |

a) → Mot. Nr. 1572 (D35) 1945 (D50)
b) Mot. Nr. → dito

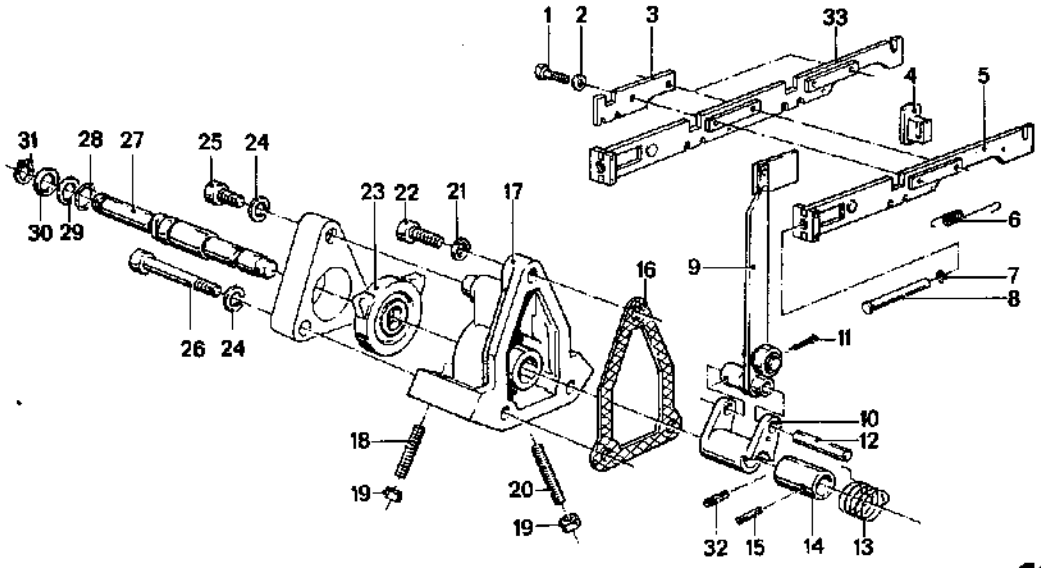


**13**
**9/2**
D 35/D 50
2/85

| 13 / 9/2 | 2/85 | | | | D 35 – 1 | D 35 – 2 | D 50 – 1 | D 50 – 2 | | Bemerkung |
|---|---|---|---|---|---|---|---|---|---|---|
| Nr. | Teile-Nummer | Symbol | Benennung | | | | | | | |
| 25 | 07 11 9 913 662 | | 6 KT SHR M 8 × 30 | | 1 | | 1 | | | |
| 26 | 07 11 9 912 562 | | 6 KT SHR M 8 × 85 | | 2 | | 2 | | | |
| 27 | 13 41 1 333 063 | | Welle / Shaft / Arbre / Axel / Albero | | 1 | | 1 | | | |
| | 13 41 1 333 655 | | dito | | | 1 | | 1 | | |
| 28 | 13 41 1 333 064 | | 12 × 2 O-Ring / O-ring / Joint torique / O-ring / Anello-O | | 1 | | 1 | | | |
| 29 | 13 41 1 333 066 | | Stützscheibe / Backup washer / Rondelle d'appui / Stödskiva / Disco di sostegno | | 1 | | 1 | | | |
| 30 | 11 32 1 329 880 | | 0,1 Ausgleichscheibe / Shim / rondelle d'écartement / Mellantägg / Rondella di spessore | | X | | X | | | |
| | 11 32 1 329 881 | | 0,2 dito | | X | | X | | | |
| | 11 32 1 329 882 | | 0,3 dito | | X | | X | | | |
| | 11 32 1 329 611 | | 0,5 dito | | X | X | X | X | | |
| 31 | 07 11 9 934 060 | | 12 × 1 Sicherungsring / Snap ring / Circlip / Låsring / Anello di sicurezza | | 1 | | 1 | | | |
| 32 | 07 11 9 941 385 | | 4 × 12 Spannstift / Tightening pin / Goupille / Spännstift / Perno tenditore di fissaggio | | 1 | 1 | 1 | 1 | | |
| 33 | a 13 41 1 333 102 | | kpl. Reglerstange / Governor linkage / Crémaillère / Reglerstång / Asta regolatrice | | | | 1 | 1 | | |
| | b 13 41 1 763 352 | | dito | | | | 1 | 1 | | |

a) → Mot. Nr. 1572 (D35) 1945 (D50)
b) Mot. Nr. → dito

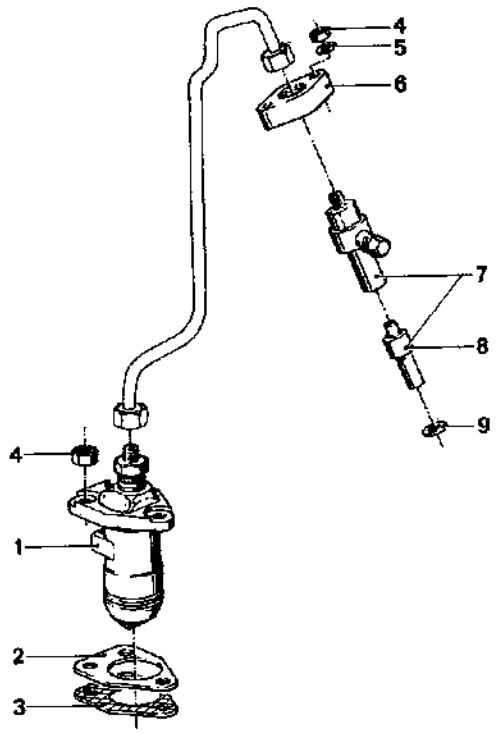


V12 Engineering
Box 50, Ontario, Canada P0X 1C0
www.bmwmarine.net





| Nr. | Teile-Nummer | Symbol | Benennung | | D35–1 | D35–2 | D50–1 | D50–2 | | Bemerkung |
|---|---|---|---|---|---|---|---|---|---|---|
| 1 | 13511333109 | | kpl. Einspritzpumpe / Injection pump / Pompe d'injection / Insprutningspump / Pompa d'iniezione | | 2 | 2 | 3 | 3 | | |
| 2 | 13511329435 | | 0,15 Ausgleichscheibe / Shim / Rondelle d'écartement / Mellanlägg / Rondella di spessore | | 2 | 2 | 3 | 3 | | |
| | 13511329436 | | 0,20 dito | | 2 | 2 | 3 | 3 | | |
| | 13511329437 | | 0,25 dito | | 2 | 2 | 3 | 3 | | |
| | 13511329438 | | 0,30 dito | | 2 | 2 | 3 | 3 | | |
| 3 | 13511329372 | | Dichtung / Seal / Garniture/ Packning / Guarnizione | | 2 | 2 | 3 | 3 | | |
| 4 | 07119922082 | | 6 KT MU M 8 | | 10 | 10 | 15 | 15 | | |
| 5 | 07119933096 | | 8 Federring / Spring lock washer / Rondelle élastique / Fjäderbricka / Anello elastico | | 4 | 4 | 6 | 6 | | |
| 6 | 13531333127 | | Bügel / Stirrup / Etrier / Bygel / Staffa | | 2 | 2 | 3 | 3 | | |
| 7 | 13531333124 | | Einspritzventil / Injection valve / Soupape d'injection / Insprutningsventil / Valvola d'iniezione | | 2 | 2 | 3 | 3 | | |
| 8 | 13531331563 | | Düse / Nozzle / Gicleur / Munstycke / Getto | | 2 | 2 | 3 | 3 | | |
| 9 | 13631331561 | | DT RG | | 2 | 2 | 3 | 3 | | |

Luftfilter
Air cleaner
Filtre à air
Luftfilter
Filtro aria



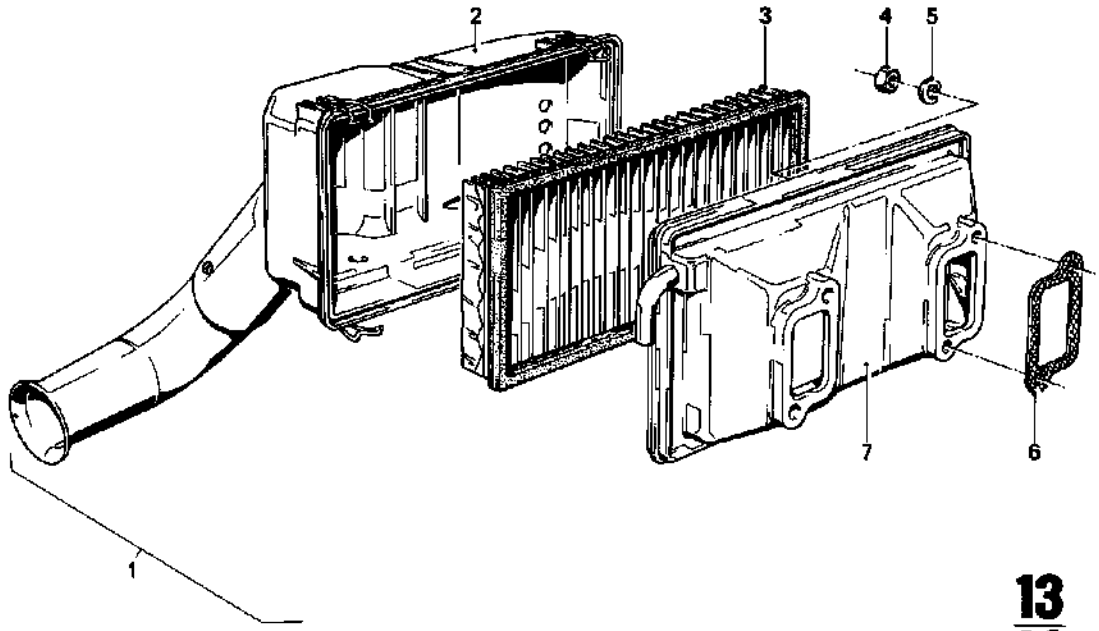


**13/11**
D 35
2/85

**13/11** 2/85

| Nr. | Teile-Nummer | Symbol | Benennung | D35–1 | D35–2 | D50–1 | D50–2 | Bemerkung |
|---|---|---|---|---|---|---|---|---|
| 1 | 13 72 1 331 097 | | kpl. Luftfilter / Air cleaner / Filtre à air / Luftfilter / Filtro aria | 1 | 1 | | | |
| 2 | 13 72 1 329 293 | | Oberteil / Top / Partie supérieure / Överdel / Parte superiore | 1 | 1 | | | |
| 3 | 13 72 1 329 294 | | Filtereinsatz / Filter element / Elément filtrant / Filterinsats / Elemento filtrante | 1 | 1 | | | |
| 4 | 11 62 1 333 233 | | 6 KT MU M 8 | 4 | 4 | 6 | 6 | |
| 5 | 07 11 9 932 081 | | A 8 Federscheibe / Spring washer / Rondelle élastique / Fjäderbricka / Rosetta elastico | 4 | 4 | 6 | 6 | |
| 6 | 13 72 1 331 443 | | Dichtung / Seal / Garniture / Packning / Guarnizione | 2 | 2 | 3 | 3 | |
| 7 | 13 72 1 763 453 | | Ansaugdeckel / Intake cover / Couvercle d'aspiration / Insugningslock / Coperchio di aspirazione | 1 | 1 | | | |

Luftfilter
Air cleaner
Filtre à air
Luftfilter
Filtro aria

BMW D35 / D50

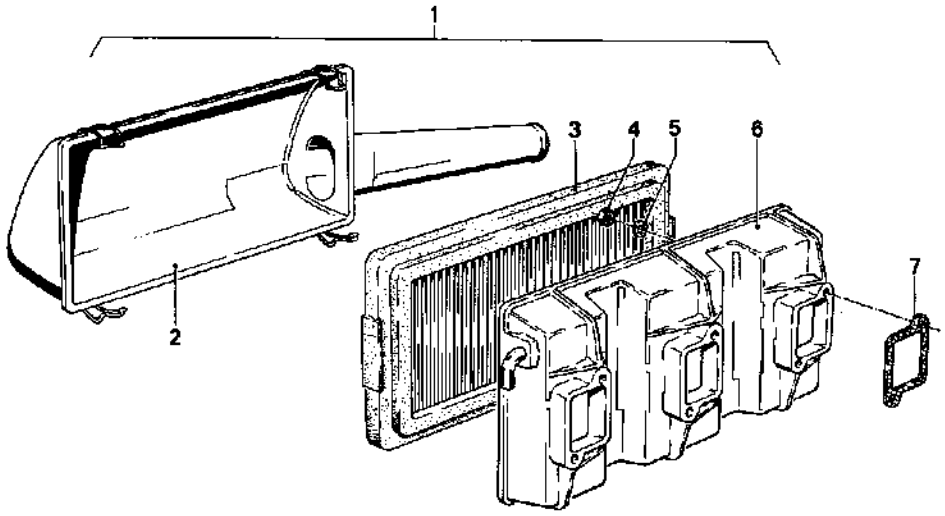


**13/12**
D 50
2/85

**13/12** 2/85

| Nr. | Teile-Nummer | Symbol | Benennung | D35-1 | D35-2 | D50-1 | D50-2 | Bemerkung |
|---|---|---|---|---|---|---|---|---|
| 1 | 13 72 1 331 098 | | kpl. Luftfilter / Air cleaner / Filtre à air / Luftfilter / Filtro aria | | | 1 | 1 | |
| 2 | 13 72 1 329 296 | | Oberteil / Top / Partie supérieure / Överdel / Parte superiore | | | 1 | 1 | |
| 3 | 13 72 1 257 060 | | Filtereinsatz / Filter element / Elément filtrant / Filterinsats / Elemento filtrante | | | 1 | 1 | |
| 4 | 11 62 1 333 233 | | 6 KT MU M8 | 4 | 4 | 6 | 6 | |
| 5 | 07 11 9 932 081 | | A8 Federscheibe / Spring washer / Rondelle élastique / Fjäderbricka / Rosetta elastico | 4 | 4 | 6 | 6 | |
| 6 | 13 72 1 763 454 | | Ansaugdeckel / Intake cover / Couvercle d'aspiration / Insugningslock / Coperchio di aspirazione | | | 1 | 1 | |
| 7 | 13 72 1 331 443 | | Dichtung / Seal / Garniture / Packning / Guarnizione | 2 | 2 | 3 | 3 | |

V12 Engineering
Box 50, Ontario, Canada P0X 1C0
www.bmwmarine.net

Seewasserpumpe
Seawater pump
Pompe à eau de mer
Havsvattenpump
Pompa completa acqua marina

BMW D 35 / D 50

V12 Engineering
Box 50, Ontario, Canada P0X 1C0
www.bmwmarine.net

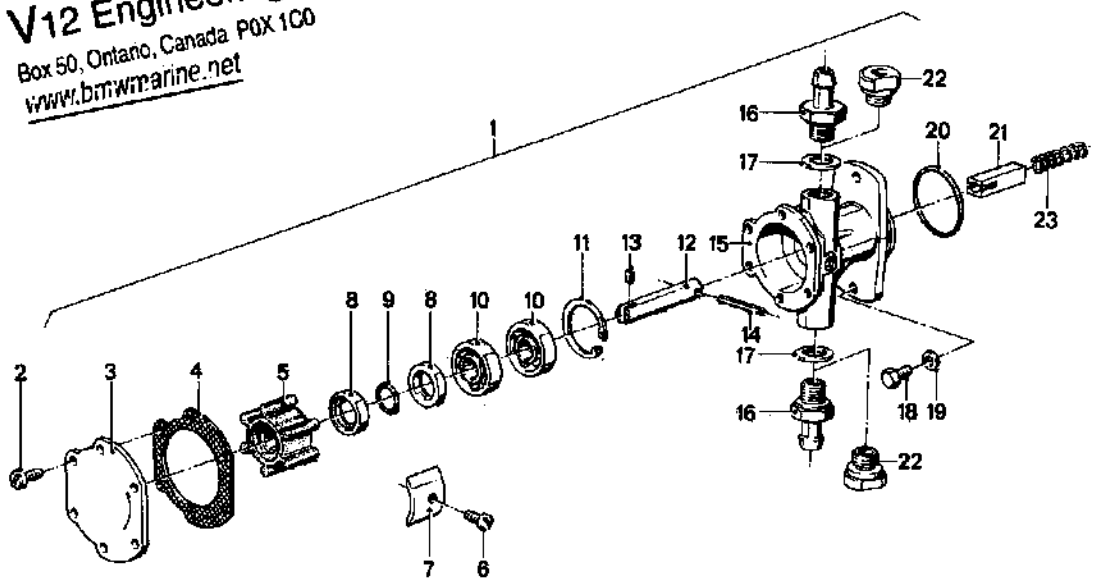


**17 / 1**
D 35/D 50
2/85

| 17/1 2/85 | | | | D 35–1 | D 35–2 | D 50–1 | D 50–2 | |
|---|---|---|---|---|---|---|---|---|
| Nr. | Teile-Nummer | Symbol | Benennung | | | | | Bemerkung |
| 1 | 17 11 1 333 640 | | kpl. Seewasserpumpe / Seawater pumpe / Pompe à eau de mer / Havsvattenpump / Pompa completa acqua marina | 1 | 1 | 1 | 1 | |
| 2 | 17 11 1 329 166 | | LIN SHR M 4 × 8 | 6 | 6 | 6 | 6 | |
| 3 | 17 11 1 331 426 | | Deckel / Cover / Couvercle / Lock / Coperchio | 1 | 1 | 1 | 1 | |
| 4 | 17 11 1 331 427 | | Dichtung / Seal / Garniture / Packning / Guarnizione | 1 | 1 | 1 | 1 | |
| 5 | 17 11 1 331 424 | | Impeller / Impeller / Roue de pompe / Pumphjul / Impeller | 1 | 1 | 1 | 1 | |
| 6 | 17 11 1 333 605 | | LIN SHR | 1 | 1 | 1 | 1 | |
| 7 | 17 11 1 333 641 | | Kamm / Cog / Peigne / Kam / Pettine | 1 | 1 | 1 | 1 | |
| 8 | 17 11 1 329 168 | | DT RG | 2 | 2 | 2 | 2 | |
| 9 | 17 11 1 329 171 | | O-Ring / O-ring / Joint torique / O-ring / Anello-O | 1 | 1 | 1 | 1 | |
| 10 | 17 11 1 329 169 | | Rillenkugellager / Deep-groove ball bearing / Roulement rainuré à billes / Spårkullager / Cuscin. a sfere scanal. | 2 | 2 | 2 | 2 | |
| 11 | 17 11 1 329 170 | | Sicherungsring / Snap ring / Circlip / Låsring / Anello di sicurezza | 1 | 1 | 1 | 1 | |
| 12 | 17 11 1 329 157 | | Welle / Shaft / Arbre / Axel / Albero | 1 | 1 | 1 | 1 | |
| 13 | 17 11 1 331 430 | | ST I SHR | 1 | 1 | 1 | 1 | |
| 14 | 17 11 1 331 435 | | Spannhülse / Clamping sleeve / Douille de serrage / Spännhylsa / Boccola a tache | 1 | 1 | 1 | 1 | |
| 15 | 17 11 1 331 422 | | Gehäuse / Housing / Boîte / Hus / Scatola | 1 | 1 | 1 | 1 | |
| 16 | 17 11 1 331 444 | | Schlauchstutzen / Hose nozzle / Raccord de tuyau / Anslutningsstycke for slang / Raccordo per tubo flessibile | 1 | | 1 | | |
| 17 | 07 11 9 963 290 | | DT RG A 17 × 21 | 2 | 2 | 2 | 2 | |
| 18 | 07 11 9 913 472 | | 6 KT SHR M 6 × 18 | 2 | 2 | 2 | 2 | |
| 19 | 07 11 9 931 044 | | 6,4 Scheibe / Washer / Rondelle / Bricka / Rondella | 2 | 2 | 2 | 2 | |
| 20 | 17 11 1 329 064 | | O-Ring / O-ring / Joint torique / O-ring / Anello-O | 1 | 1 | 1 | 1 | |
| 21 | 17 11 1 761 670 | | Mitnehmer / Driving dog / Entraineur / Medbringare / Trascinatore | 1 | 1 | 1 | 1 | |
| 22 | 17 11 1 333 337 | | Schraubstutzen / Theaded socket / Raccord fileté / Skruvmuff / Bocchettone filettato | 1 | 2 | 1 | 2 | |
| 23 | 17 11 1 761 671 | | Druckfeder / Compression spring / Ressort de pression / Tryckfjäder / Molla di compressione | 1 | 1 | 1 | 1 | |

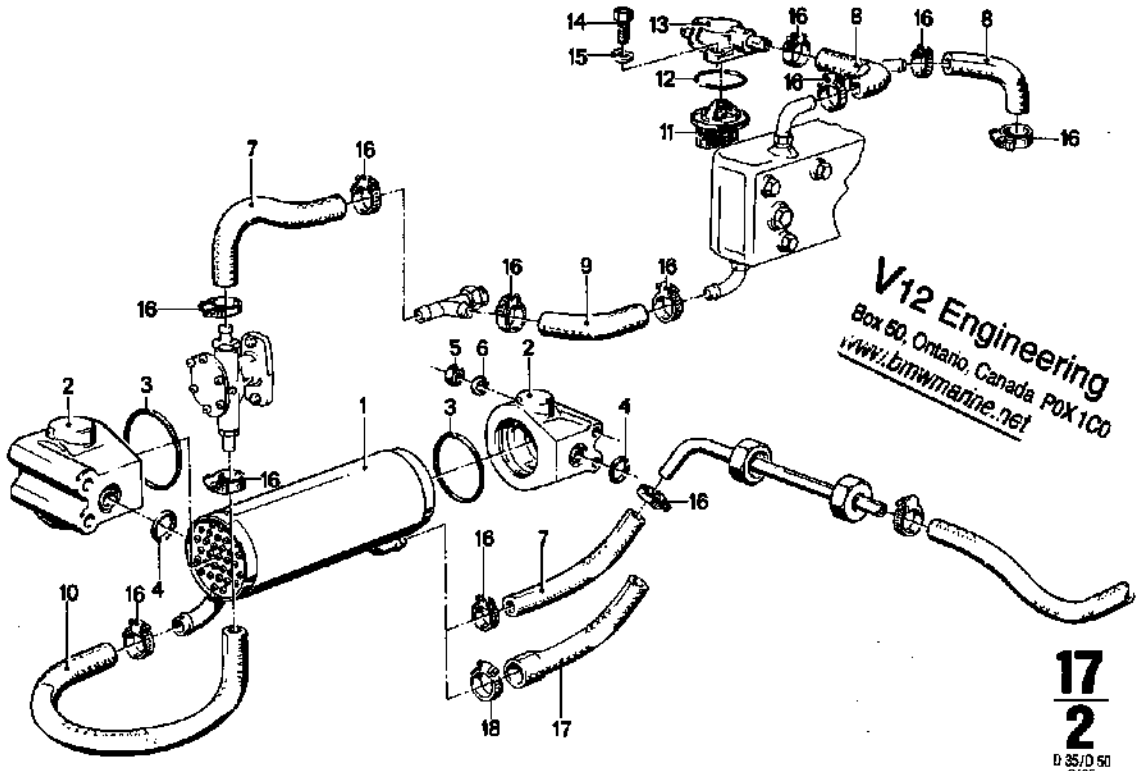


V12 Engineering
Box 50, Ontario, Canada P0X 1C0
www.bmwmarine.net

**17 / 2**
D 35/D 50
2/85

**17 / 2** 2/85

| Nr. | Teile-Nummer | Symbol | Benennung | D 35–1 | D 35–2 | D 50–1 | D 50–2 | Bemerkung |
|---|---|---|---|---|---|---|---|---|
| 1 | 17 21 1 329 340 | | Wärmetauscher / Heat-exchanger / Echangeur de chaleur / Värmeväxlare / Scambiatore di calore | 1 | | | | |
| | 17 21 1 329 341 | | dito | | | 1 | | |
| 2 | 17 21 1 331 413 | | Kühlerstück / Cooler fitting / Pièce de radiateur / Kylarstycke / Pezzo del radiatore | 2 | | 2 | | |
| 3 | 17 21 1 331 418 | | 54 × 3 O-Ring / O-ring / Joint torique / O-ring / Anello-O | 2 | | 2 | | |
| 4 | 17 21 1 331 518 | | 16,3 × 2,4 dito | 2 | | 2 | | |
| 5 | 07 11 9 922 087 | | 6 KT MU M 8 | 4 | | 4 | | |
| 6 | 07 11 9 932 081 | | A 8,4 Federscheibe / Spring washer / Rondelle élastique / Fjäderbricka / Rosetta elastico | 4 | | 4 | | |
| 7 | a 17 12 1 329 240 | WW | Schlauch / Hose / Slang / Flexible / Tubo flessibile | 2 | 2 | 2 | 2 | |
| 8 | 17 12 1 331 568 | | Krümmer / Elbow / Coude / Krök / Gomito | 2 | | 2 | | |
| 9 | 17 12 1 331 567 | | dito | 1 | | 1 | | |
| 10 | 17 12 1 329 242 | | Schlauch / Hose / Slang / Flexible / Tubo flessibile | 1 | | 1 | | |
| 11 | 17 11 1 329 391 | | 45° Thermostat / Thermostat / Thermostat / Termostat / Termostato | 1 | | 1 | | |
| 12 | 17 11 1 761 129 | | O-Ring / O-ring / Joint torique / O-ring / Anello-O | 1 | 1 | 1 | 1 | |
| 13 | 17 11 1 331 469 | | Deckel / Cover / Couvercle / Lock / Coperchio | 1 | | 1 | | |
| 14 | 07 11 9 913 477 | | 6 KT SHR M 6 × 20 | 3 | | 3 | | |
| 15 | 07 11 9 933 082 | | Federring / Spring lock washer / Rondelle élastique / Fjäderbricka / Anello elastico | 3 | | 3 | | |
| 16 | 11 53 1 326 638 | | 16–25 Schelle / Coil clip / Collier / Klammer / Fascetta | 11 | | 11 | | |
| 17 | a 17 12 1 333 839 | WW | Krümmer / Elbow / Coude / Krök / Gomito | 1 | | 1 | | |
| 18 | 11 53 1 761 179 | | 20–32 Schelle / Coil clip / Collier / Klammer / Fascetta | 1 | | 1 | | |

a) nur für BW 7 Getriebe / for BW 7 Gearbox only / uniquement pour BW 7 Boîte à vitesse / bara för BW 7 Växel / Solo per BW 7 gruppo propulsore

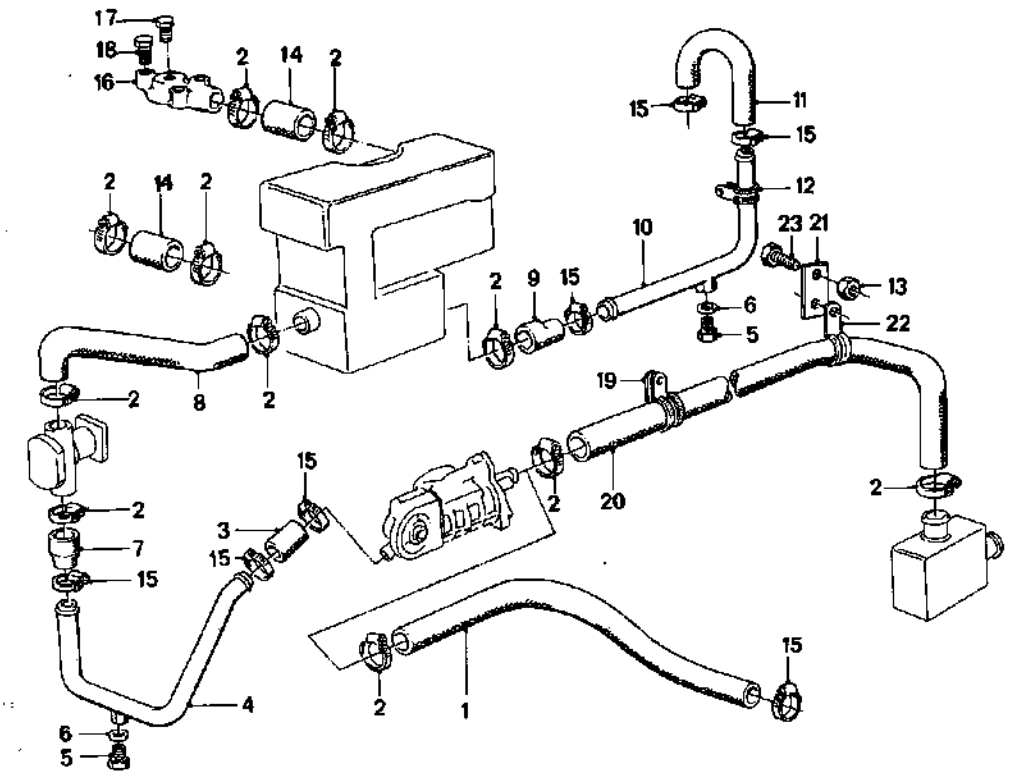


**17/3**
D 35/D 50
2/85

**17/3** 2/85

| Nr. | Teile-Nummer | Symbol | Benennung | D 35–1 | D 35–2 | D 50–1 | D 50–2 | Bemerkung |
|---|---|---|---|---|---|---|---|---|
| 1 | a 17 12 1 333 755 | | Schlauch / Hose / Tuyau / Slang / Tubo flessibile | | 1 | | | |
| | a 17 12 1 333 756 | | dito | | | | 1 | |
| 2 | 11 53 1 326 523 | | 25–40 Schlauchschelle / Hose clamp / Collier de flexible / Slangklämmer / Collare per tubo flessibile | | 12 | | 12 | |
| 3 | 17 12 1 333 754 | | Stutzen / Connection / Tubulure / Stuts / Bocchettone | | 1 | | 1 | |
| 4 | 17 12 1 333 752 | | Seewasserrohr / Sea water pipe / Tube à eau de mer / Havsvattenrör / Tubo acqua di mare | 1 | 1 | 1 | 1 | |
| 5 | 11 44 1 763 260 | | VSL SHR | 2 | 2 | 2 | 2 | |
| 6 | 07 11 9 963 201 | | DT RG | | 2 | | 2 | |
| 7 | 17 12 1 333 753 | | Muffe / Bushing / Douille / Muff / Manicotto | 1 | 1 | 1 | 1 | |
| 8 | 17 12 1 333 340 | | Krümmer / Elbow / Coude / Krök / Gomito | | 1 | | 1 | |
| 9 | 17 12 1 333 609 | | Muffe / Bushing / Douille / Muff / Manicotto | | 1 | | 1 | |
| 10 | 17 12 1 333 610 | | Seewasserrohr / Sea water pipe / Tube à eau de mer / Havsvattenrör / Tubo acqua di mare | | 1 | | | |
| | 17 12 1 333 611 | | dito | | | | 1 | |
| 11 | 17 12 1 333 608 | | Krümmer / Elbow / Coude / Krök / Gomito | | 1 | | 1 | |
| 12 | 17 12 1 333 615 | | Rohrschelle / Pipe clamp / Bride de tuyau / Rörklämma / Fascetta di tubo | | 1 | | 1 | |
| 14 | 11 53 1 333 343 | | Verbindungsschlauch / Connecting hose / Flexible de raccordement / Slangförbinding / Tubo flessibile di collegamento | | 2 | | 2 | |
| 15 | 11 53 1 761 179 | | 20–32 Schelle / Clamp / Collier / Kämma / Fascetta | | 4 | | 4 | |
| 16 | 11 53 1 333 335 | | Deckel / Cover / Couvercle / Lock / Coperchio | | 1 | | 1 | |
| 17 | 07 11 9 919 015 | | VSL SHR M 14 × 1,5 | | 1 | | 1 | |
| 18 | 07 11 9 912 303 | | 6 KT SHR M 6 × 35 | | 3 | | 3 | |
| 19 | b 17 11 1 763 100 | | Rohrschelle / Pipe clamp / Bride de tuyau / Rörklämma / Fascetta di tubo | 1 | 1 | 1 | 1 | |
| 20 | b 74 93 1 763 133 | | Seewasserschlauch / Seawater hose / Tuyau à eau de mer / Havsvattensslang / Tubo flessibile per acqua marina | 1 | 1 | 1 | 1 | |
| 21 | b 17 11 1 763 099 | | Halteblech / Retaining plate / Tôle de retenue / Fästplåt / Lamiera di stostegno | 1 | 1 | 1 | 1 | |
| 22 | b 17 11 1 763 098 | | Rohrschelle / Pipe clamp / Bride de tuyau / Rörklämma / Fascetta di tubo | 1 | 1 | 1 | 1 | |
| 23 | b 07 11 9 913 880 | | 6 KT SHR M 10 × 20 | 1 | 1 | 1 | 1 | |
| 24 | b 07 11 9 922 113 | | 6 KT MU M 10 | 1 | 1 | 1 | 1 | |

a) nur für BW 7 Getriebe / for BW 7 Gearbox only / uniquement pour BW 7 Boîte à vitesse / bara för BW 7 Växel / solo per BW 7 gruppo propulsore
b) nur für Hurth-Getriebe 100/150/150V/250 linkslaufender Propeller / for Hurth-Gearbox 100/150/150V/250 only anticlockwise rotating propeller / uniquement pour Hurth-Boîte à vitesse 100/150/150V/250 l'hélice tournant à gauche / bara för Hurth-Växel 100/150/150V/250 propeller med vänstergång / solo per elica a rotazione sinistra Hurth-Gruppo propulsore 100/150/150V/250

Kühlwasserbehälter
Cooling water tank
Reservoir d'eau de refroidissement
Kylvattentank
Recipiente dell'acqua di raffreddamento



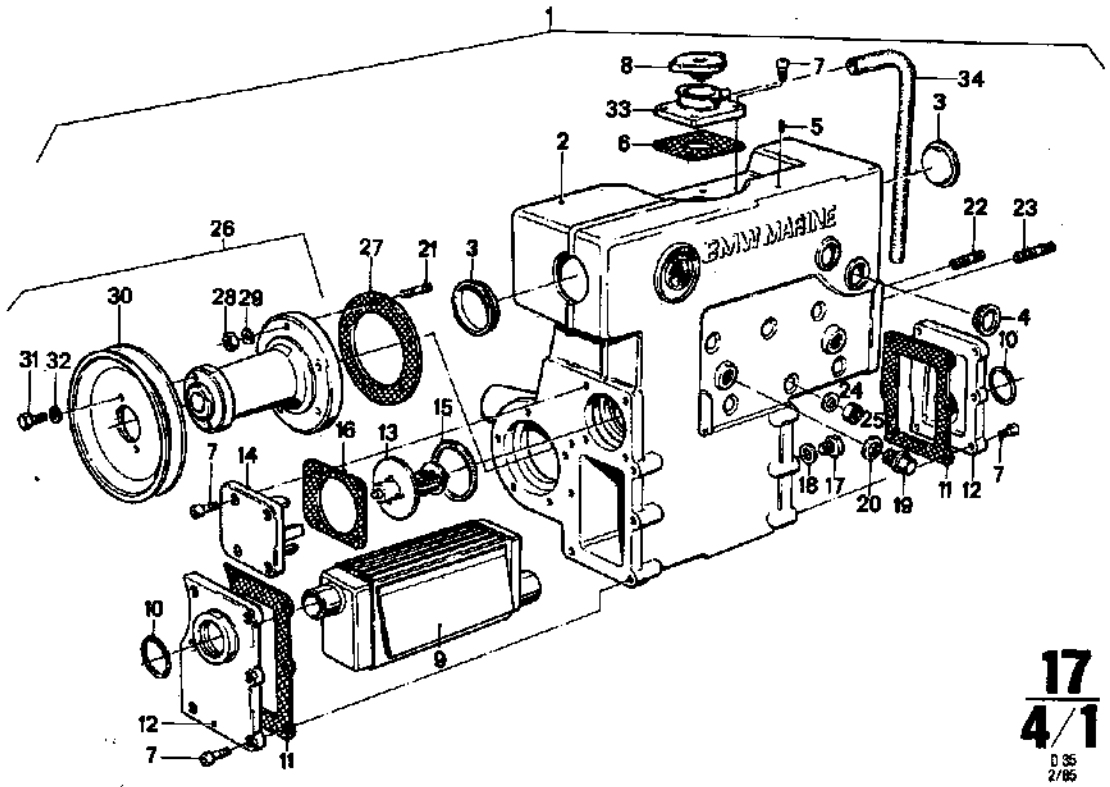


17
4/1
D 35
2/85

| 17/4/1 2/85 | | | | | | | | | |
|---|---|---|---|---|---|---|---|---|---|
| Nr. | Teile-Nummer | Symbol | Benennung | | D35–1 | D35–2 | D50–1 | D50–2 | Bemerkung |
| 1 | 11 53 1 333 321 | | kpl. Kühlwasserbehälter / Cooling water tank / Reservoir d'eau de refroidissement / Kylvattentank / Recipiente dell'acqua di raffreddamento | | | 1 | | | |
| 2 | 11 53 1 333 323 | | Kühlwasserbehälter / Cooling water tank / Reservoir d'eau de refroidissement / Kylvattentank / Recipiente dell'acqua di raffreddamento | | | 1 | | | |
| 3 | 07 11 9 937 332 | | 45 Verschlußdeckel / Blanking cover / Couvercle d'obturation / Täcklock / Coperchio di chiusura | | | 2 | | 2 | |
| 4 | 07 11 9 937 274 | | 22 dito | | | 2 | | 2 | |
| 5 | 07 11 9 942 033 | | ZYL STI | | | 1 | | 1 | |
| 6 | 11 53 1 326 497 | | Dichtung / Seal / Garniture / Packning / Guarnizione | | | 1 | | 1 | |
| 7 | 07 11 9 919 965 | | ZYL SHR M 6 × 16 | | | 20 | | 20 | |
| 8 | 11 53 1 328 892 | | Kühlerverschluß / Radiator cap / Bouchon de radiateur / Kylare lock / Tappo radiatore | | | 1 | | 1 | |
| 9 | 11 53 1 328 742 | | Kühlereinsatz / Radiator insert / Element de radiateur / Radiatorinsats / Inserzione radiatore | | | 1 | | 1 | |
| 10 | 11 53 1 328 653 | | O-Ring / O-ring / Joint torique / O-ring / Anello-O | | | 2 | | 2 | |
| 11 | 11 53 1 333 339 | | Dichtung / Seal / Garniture / Packning / Guarnizione | | | 2 | | 2 | |
| 12 | 11 53 1 333 338 | | Deckel / Cover / Couvercle / Lock / Coperchio | | | 2 | | 2 | |
| 13 | 11 53 1 328 591 | | 71° Thermostateinsatz / Thermostat insert / Cartouche de thermostat / Termostatinsats / Inserto del termostato | | | 1 | | 1 | |
| 14 | 11 53 1 333 759 | | Thermostatdeckel / Thermostat cover / Couvercle de thermostat / Termostatlock / Coperchio del termostato | | | 1 | | 1 | |
| 15 | 11 53 1 328 654 | | O-Ring / O-ring / Joint torique / O-ring / Anello-O | | | 1 | | 1 | |
| 16 | 11 53 1 328 646 | | Dichtung / Seal / Garniture / Packning / Guarnizione | | | 1 | | 1 | |
| 17 | 07 11 9 919 112 | | VSL SHR M 10 × 1 | | | 1 | | 1 | |
| 18 | 07 11 9 963 073 | | DT RG | | | 1 | | 1 | |
| 19 | 07 11 9 919 187 | | VSL SHR | | | 2 | | 3 | |
| 20 | 11 62 1 331 656 | | DT RG | | | 2 | | 3 | |
| 21 | 07 11 9 908 295 | | STI SHR M 8 × 16 | | | 5 | | 5 | |
| 22 | 07 11 9 908 310 | | STI SHR M 8 × 20 | | | 4 | | 4 | |
| 23 | 07 11 9 908 365 | | STI SHR M 8 × 25 | | | 1 | | 1 | |
| 24 | 07 11 9 931 067 | | A 8 Scheibe / Washer / Rondelle / Bricka / Rondella | | 6 | 6 | 10 | 10 | |
| 25 | 11 62 1 333 233 | | 6 KT MU M 8 | | 6 | 6 | 10 | 10 | |

Kühlwasserbehälter
Cooling water tank
Reservoir d'eau de refroidissement
Kyivattentank
Recipiente dell'acqua di raffreddamento



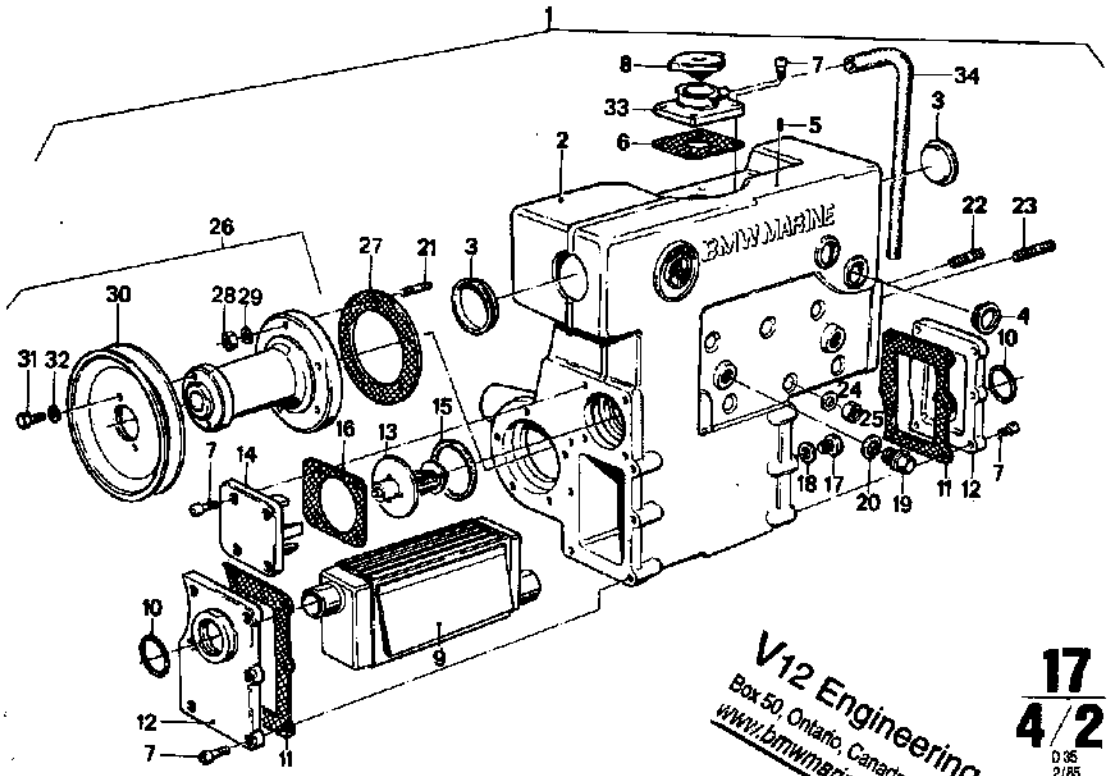


V12 Engineering
Box 50, Ontario, Canada P0X 1G0
www.bmwmarine.net





| Nr. | Teile-Nummer | Symbol | Benennung | D35-1 | D35-2 | D50-1 | D50-2 | Bemerkung |
|---|---|---|---|---|---|---|---|---|
| 26 | 11 51 1 333 330 | | kpl. Wasserpumpe / Waterpump / Pompe à eau / Vattenpump / Pompa acqua | | 1 | | 1 | |
| 27 | 11 51 1 333 331 | | Dichtung / Seal / Garniture / Packning Guarnizione | | 1 | | 1 | |
| 28 | 07 11 9 922 058 | | 6 KT MU M 6 | | 5 | | 5 | |
| 29 | 07 11 9 932 072 | | B 6 Federscheibe / Spring washer / Rondelle élastique / Fjäderbricka / Rosetta elastico | | 5 | | 5 | |
| 30 | a 11 51 1 333 394 | WW | Keilriemenscheibe / V-belt pulley / Poulie à gorge / Kilremsskiva / Puleggia della cinghia trapezoidale | | 1 | | 1 | |
| | a 11 51 1 761 747 | WW | dito | | | | 1 | |
| 31 | 07 11 9 913 442 | | 6 KT SHR M 6 x 12 | | 2 | | 2 | |
| 32 | 07 11 9 933 082 | | Scheibe / Washer / Rondelle / Bricka / Rondella | | 2 | | 2 | |
| 33 | 11 53 1 326 498 | | Füllstutzenbecher / Filler cup / Godet de tubulure de remplissage / Påfyllningsrörets bägare / Coppa del bocchetone di riempimento | | 1 | | 1 | |
| 34 | 17 12 1 119 294 | | Abdampfschlauch / Exhaust steam hose / Flexible de vapeur d'échappement / Avgunstslang / Tubo flessibile di evaporazione | | 1 | | 1 | |

a) Mot. Nr. → 2070 (D50)

Kühlwasserbehälter
Cooling water tank
Reservoir d'eau de refroidissement
Kylvattentank
Recipiente dell'acqua di raffreddamento

BMW D 35 / D 50

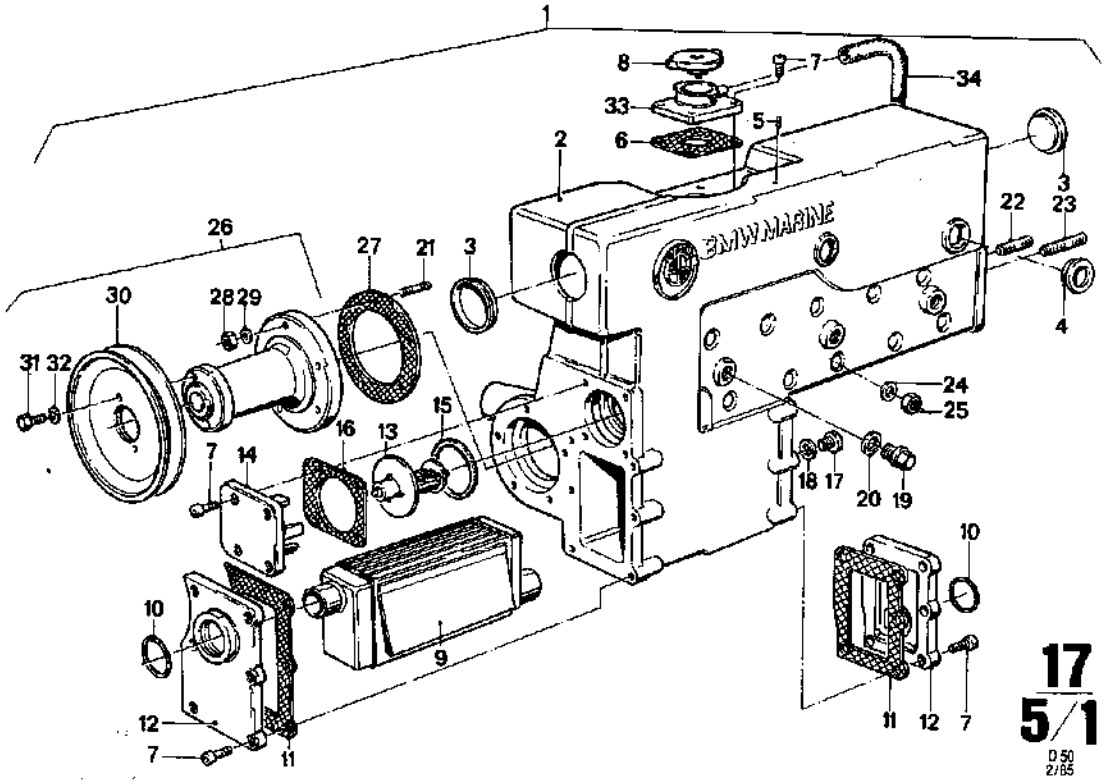


**17 / 5/1** 2/85 11531333745 Kit

| Nr. | Teile-Nummer | Symbol | Benennung | D 35–1 | D 35–2 | D 50–1 | D 50–2 | Bemerkung |
|---|---|---|---|---|---|---|---|---|
| 1 | 11 53 1 333 321 | | kpl. Kühlwasserbehälter / Cooling water tank / Reservoir d'eau de refroidissement / Kylvattentank / Recipiente dell'acqua di raffreddamento | | | | 1 | |
| 2 | 11 53 1 333 323 | | Kühlwasserbehälter / Cooling water tank / Reservoir d'eau de refroidissement / Kylvattentank Recipiente dell'acqua di reffreddamento | | | | 1 | |
| 3 | 07 11 9 937 332 | | 45 Verschlußdeckel / Blanking cover / Couvercle d'obturation / Täcklock / Coperchio di chiusura | | 2 | | 2 | |
| 4 | 07 11 9 937 274 | | 22 dito | | 2 | | 2 | |
| 5 | 07 11 9 942 033 | | ZYL STI | | 1 | | 1 | |
| 6 | 11 53 1 326 497 | | Dichtung / Seal / Garniture / Packning / Guarnizione | | 1 | | 1 | |
| 7 | 07 11 9 919 965 | | ZYL SHR M 6 × 16 | | 20 | | 20 | |
| 8 | 11 53 1 328 892 | | Kühlerverschluß / Radiator cap / Bouchon de radiateur / Kylare lock / Tappo radiatore | | 1 | | 1 | |
| 9 | 11 53 1 328 742 | | Kühlereinsatz / Radiator insert / Element de radiateur / Radiatorinsats / Inserzione radiatore | | 1 | | 1 | |
| 10 | 11 53 1 328 653 | | O-Ring / O-ring / Joint torique / O-ring / Anello-O | | 2 | | 2 | |
| 11 | 11 53 1 333 339 | | Dichtung / Seal / Garniture / Packning / Guarnizione | | 2 | | 2 | |
| 12 | 11 53 1 333 338 | | Deckel / Cover / Couvercle / Lock / Coperchio | | 2 | | 2 | |
| 13 | 11 53 1 328 591 | | 71° Thermostateinsatz / Thermostat insert / Cartouche de thermostat / Termostatinsats / Inserto del termostato | | 1 | | 1 | |
| 14 | 11 53 1 333 759 | | Thermostatdeckel / Thermostat cover / Couvercle de thermostat / Termostatlock / Coperchio del termostato | | 1 | | 1 | |
| 15 | 11 53 1 328 654 | | O-Ring / O-ring / Joint torique / O-ring / Anello-O | | 1 | | 1 | |
| 16 | 11 53 1 328 646 | | Dichtung / Seal / Garniture / Packning / Guarnizione | | 1 | | 1 | |
| 17 | 07 11 9 919 112 | | VSL SHR M 10 × 1 | | 1 | | 1 | |
| 18 | 07 11 9 963 073 | | DT RG | | 1 | | 1 | |
| 19 | 07 11 9 919 187 | | VSL SHR | | 2 | | 3 | |
| 20 | 11 62 1 331 556 | | DT RG | | 2 | | 3 | |
| 21 | 07 11 9 908 295 | | STI SHR M 8 × 16 | | 5 | | 5 | |
| 22 | 07 11 9 908 310 | | STI SHR M 8 × 20 | | 4 | | 4 | |
| 23 | 07 11 9 908 365 | | STI SHR M 8 × 25 | | 1 | | 1 | |
| 24 | 07 11 9 931 067 | | A 8 Scheibe / Washer / Rondelle / Bricka / Rondella | 6 | 6 | 10 | 10 | |
| 25 | 11 62 1 333 233 | | 6 KT MU M 8 | 6 | 6 | 10 | 10 | |

Kühlwasserbehälter
Cooling water tank
Reservoir d'eau de refroidissement
Kylvattentank
Recipiente dell'acqua di raffreddamento

BMW D 35 / D 50

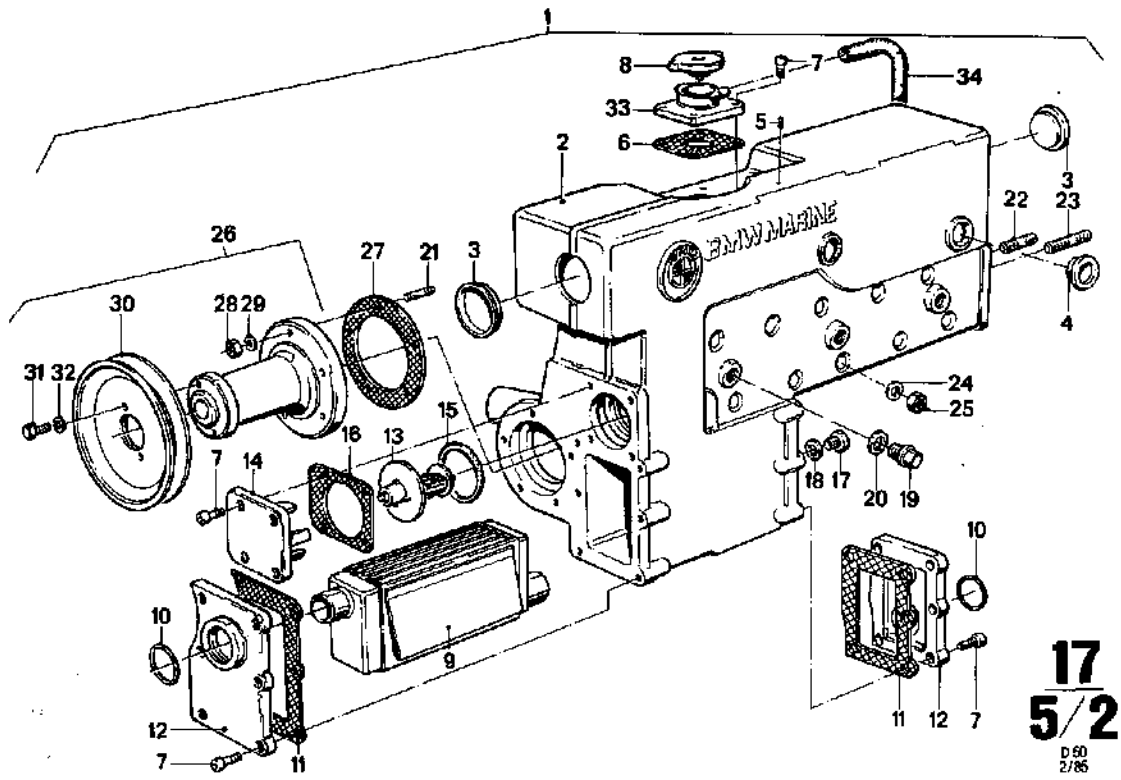


| 17 / 5/2 | 2/85 | | | | D 35–1 | D 35–2 | D 50–1 | D 50–2 | | |
|---|---|---|---|---|---|---|---|---|---|---|
| Nr. | Teile-Nummer | Symbol | Benennung | | | | | | | Bemerkung |
| 26 | 11 51 1 333 330 | | kpl. Wasserpumpe / Waterpump / Pompe à eau / Vattenpump Pompa acqua | | | 1 | | 1 | | |
| 27 | 11 51 1 333 331 | | Dichtung / Seal / Garniture / Packning / Guarnizione | | | 1 | | 1 | | |
| 28 | 07 11 9 922 058 | | 6 KT MU M 6 | | | 5 | | 5 | | |
| 29 | 07 11 9 932 072 | | B 8 Federscheibe / Spring washer / Rondelle élastique / Fjäderbricka / Rosetta elastico | | | 5 | | 5 | | |
| 30 | 11 51 1 333 394 | WW | Keilriemenscheibe / V-belt pulley / Poulie à gorge / Kilremsskiva / Puleggia della cinghia trapezoidale | | | 1 | | 1 | | |
| | a 11 51 1 761 747 | WW | dito | | | | | 1 | | |
| 31 | 07 11 9 913 442 | | 6 KT SHR M 6 × 12 | | | 2 | | 2 | | |
| 32 | 07 11 9 933 082 | | Scheibe / Washer / Rondelle / Bricka / Rondella | | | 2 | | 2 | | |
| 33 | 11 53 1 326 498 | | Füllstutzenbecher / Filler cup / Godet de tubulure de remplissage / Påfyllningsrörets bägare / Coppa del bocchetone di riempimento | | | 1 | | 1 | | |
| 34 | 17 12 1 119 294 | | Abdampfschlauch / Exhaust steam hose / Flexible de vapeur d'échappement / Avdunstslang / Tubo flessibile di evaporazione | | | 1 | | 1 | | |

a) Mot. Nr. → 2070 (D50)

V12 Engineering
Box 50, Ontario, Canada P0X 1C0
www.bmwmarine.net

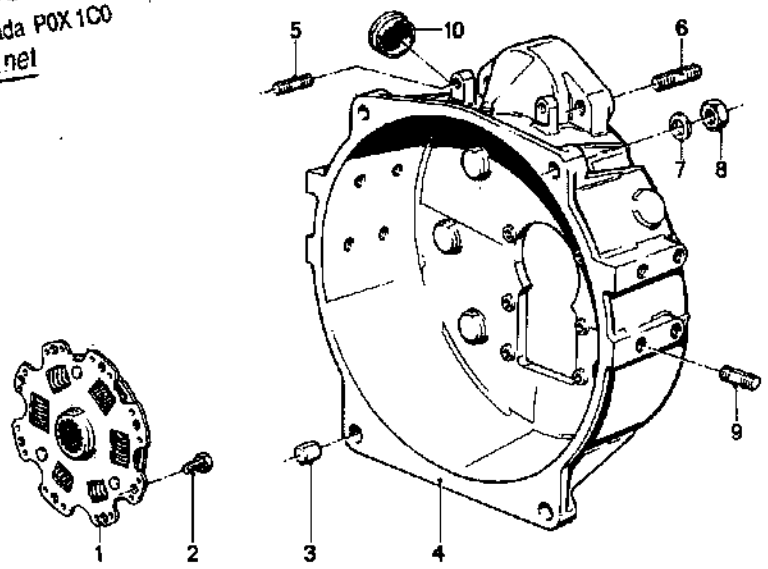


**21 / 1**
D 35/D 50
2/85

**21 / 1** 2/85

| Nr. | Teile-Nummer | Symbol | Benennung | D 35 – 1 | D 35 – 2 | D 50 – 1 | D 50 – 2 | Bemerkung |
|---|---|---|---|---|---|---|---|---|
| 1 | c 21 21 1 331 419 | | Kupplungsscheibe / Clutch disk / Disque d'embrayage / Kopplingsskiva / Disco della frizione | 1 | 1 | 1 | 1 | |
| | d 21 21 1 329 049 | | dito | 1 | 1 | 1 | 1 | |
| | e 21 21 1 761 059 | | dito | 1 | 1 | 1 | 1 | |
| 2 | 07 11 9 919 939 | | ZYL SHR M 8 × 16 | 4 | 4 | 4 | 4 | |
| 3 | 11 81 1 329 410 | | Paßhülse / Locating sleeve / Douille calibrée / Passhylsa / Boccola d. agginstaggio | 2 | 2 | 2 | 2 | |
| 4 | a 11 81 1 329 394 | | Kupplungsglocke / Clutch housing / Carter d'embrayage / Kopplingshus / Campana interna della frizione | 1 | | 1 | | |
| | b 11 81 1 333 669 | | dito | 1 | 1 | 1 | 1 | |
| | e 11 81 1 761 348 | | dito | 1 | 1 | 1 | 1 | |
| 5 | 07 11 9 908 297 | | STI SHR M 8 × 12 | 2 | | 2 | | |
| 6 | 07 11 9 908 402 | | STI SHR M 12 × 30 | 2 | 2 | 2 | 2 | |
| 7 | 07 11 9 931 088 | | A 15 Scheibe / Washer / Rondelle / Bricka / Rondella | 4 | 4 | 4 | 4 | |
| 8 | 07 11 9 922 156 | | 6 KT MU M 14 × 1,5 | 4 | 4 | 4 | 4 | |
| 9 | 07 11 9 908 397 | | STI SHR M 10 × 20 | 8 | 8 | 8 | 8 | |
| 10 | 11 81 1 329 348 | | Verschlußstopfen / Terminal plug / Bouchon de serrure / Propp / Cuffia di chiusura | 1 | 1 | 1 | 1 | |

a) →Mot.-Nr. 639
b) Mot.-Nr.→dito

c) Nur für ZF BW 7
For ZF BW 7 only
Uniquement pour ZF BW 7
Bara för ZF BW 7
Solo per ZF BW 7

d) Nur für HBW 100/150/150V
For HBW 100/150/150V only
Uniquement pour HBW 100/150/150V
Bara för HBW 100/150/150V
Solo per HBW 100/150/150V

e) Nur für HBW 250
For HBW 250 only
Uniquement pour HBW 250
Bara för HBW 250
Solo per HBW 250

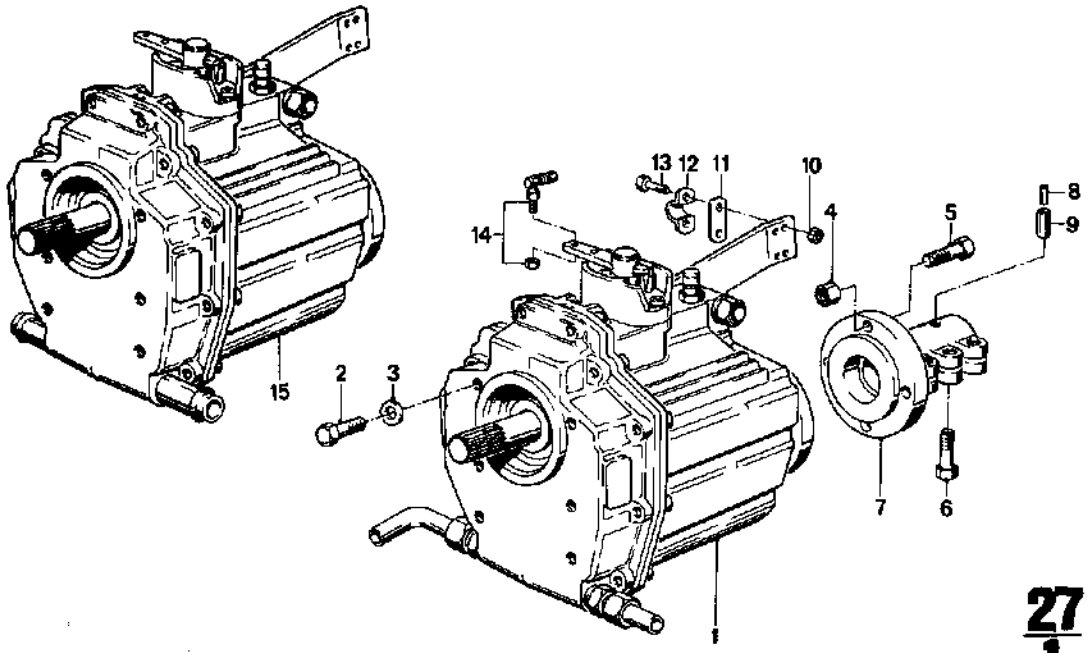


**27**
**1**
D 35/D 50
2/85

**27 1** 2/85

| Nr. | Teile-Nummer | Symbol | Benennung | D 35 – 1 | D 35 – 2 | D 50 – 1 | D 50 – 2 | Bemerkung |
|---|---|---|---|---|---|---|---|---|
| 1 | 27 63 1 331 421 | | kpl. i = 2,05 Wendegetriebe / Reversing transmission / Réducteur-inverseur / Backväxel / Cambio ad inversione di marcia | | | 1 | | |
| | 27 63 1 331 423 | | kpl. i = 2,47 dito | 1 | | | | |
| 2 | 07 11 9 913 662 | | 6 KT SHR M 8 × 30 | 6 | 6 | 6 | 6 | |
| 3 | 07 11 9 931 067 | | B 8,4 Scheibe / Washer / Rondelle / Bricka / Rondella | 6 | 6 | 6 | 6 | |
| 4 | 07 11 9 922 113 | | 6 KT MU M 10 | 4 | 4 | 4 | 4 | |
| 5 | 07 11 9 913 837 | | 6 KT SHR M 10 × 30 | 4 | 4 | 4 | 4 | |
| 6 | 07 11 9 913 676 | | 6 KT SHR M 8 × 35 | 6 | 6 | 6 | 6 | |
| 7 | 27 63 1 333 368 | | Wellenkupplung / Shaft coupling / Accouplement d'arbre d'hélice / Axelkoppling / Accoppiamento di due alberi | 1 | 1 | 1 | 1 | |
| 8 | 07 11 9 941 341 | | 5 × 50 Spannstift / Spring dowel sleeve / Goupille de serrage / Spännstift / Perno tenditore di fissaggio | 1 | 1 | 1 | 1 | |
| 9 | 07 11 9 941 345 | | 8 × 50 dito | 1 | 1 | 1 | 1 | |
| 10 | 07 11 9 922 700 | | 6 KT MU M 5 | 2 | 2 | 2 | 2 | |
| 11 | 13 21 1 330 287 | | Distanzblech / Spacing plate / Tôle d'écartement / Distansbleck / Lamiera distanziatore | 1 | 1 | 1 | 1 | |
| 12 | 13 21 1 326 574 | | Klemmbügel / Clamp strap / Etrier de serrage / Klämbyggel / Staffa di serraggio | 1 | 1 | 1 | 1 | |
| 13 | 07 11 9 913 251 | | 6 KT SHR M 5 × 20 | 2 | 2 | 2 | 2 | |
| 14 | 27 63 1 763 200 | | Kugelgelenk / Globe joint / Joint à rotule / Kulled / Snodo sferico | 1 | 1 | 1 | 1 | |
| 15 | 27 63 1 333 646 | | kpl. i = 2,05 Wendegetriebe / Reversing transmission / Réducteur-inverseur / Backväxel / Cambio ad inversione di marcia | | | 1 | 1 | |
| | 27 63 1 333 647 | | kpl. i = 2,47 dito | 1 | 1 | | | |
| | 27 63 1 333 648 | | kpl. i = 3,00 dito | 1 | 1 | | | |

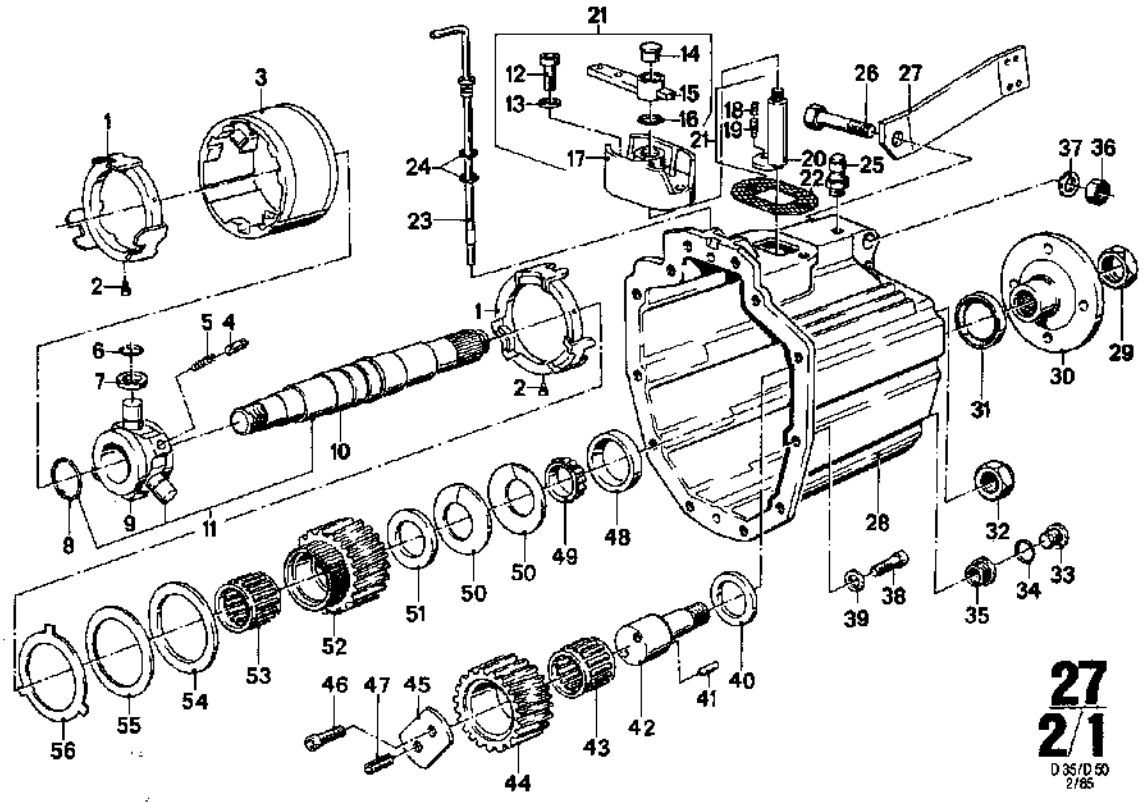


**27 2/1** 2/85

| Nr. | Teile-Nummer | Symbol | Benennung | D 35–1 | D 35–2 | D 50–1 | D 50–2 | Bemerkung |
|---|---|---|---|---|---|---|---|---|
| 1 | 27 63 1 333 207 | | Druckring / Thrust ring / Anneau de pression / Tryckring / Anello appoggio | 2 | 2 | 2 | 2 | |
| 2 | 27 63 1 333 206 | | Riegelbolzen / Locking pin / Boulon de verrouillage / Regelblut / Perno di bloccaggio | 2 | 2 | 2 | 2 | |
| 3 | 27 63 1 333 208 | | Schiebemuffe / Sliding sleeve / Manchon coulissant / Skjutbar muff / Manicotto scorrevole | 1 | 1 | 1 | 1 | |
| 4 | 27 63 1 333 209 | | Rastbolzen / Detent pin / Boulon d'encliquetage / Spärrbult / Boccola a tacche | 1 | 1 | 1 | 1 | |
| 5 | 27 63 1 333 210 | | Druckfeder / Return spring / Ressort de pression / Tryckfjäder / Molla di compressione | 1 | 1 | 1 | 1 | |
| 6 | 07 11 9 933 509 | | Sprengring / Expansion ring / Anneau d'expansion / Låsring / Anello elastico | 1 | 1 | 1 | 1 | |
| 7 | 27 63 1 333 211 | | Spannrolle / Jockey pulley / Galet-tendeur / Spännrulle / Tenditore | 1 | 1 | 1 | 1 | |
| 8 | 27 63 1 333 213 | | 1,4 Sprengring / Expansion ring / Anneau d'expansion / Låsring / Anello elastico | X | X | X | X | |
| | 27 63 1 333 214 | | 1,5 dito | X | X | X | X | |
| 9 | 27 63 1 333 215 | | Rollenträger / Pulley support / Porte-galet / Rullbärare / Portarulli | 1 | 1 | 1 | 1 | |
| 10 | 27 63 1 333 216 | | Antriebswelle / Input shaft / Arbre primaire / Ingående axel / Albero primario | 1 | 1 | 1 | 1 | |
| 11 | 27 63 1 333 212 | | kpl. dito | 1 | 1 | 1 | 1 | |
| 12 | 07 11 9 919 732 | | ZYL SHR M 8 × 30 | 2 | 2 | 2 | 2 | |
| 13 | 27 63 1 333 354 | | Scheibe / Washer / Rondelle / Bricka / Rondella | 2 | 2 | 2 | 2 | |
| 14 | 27 63 1 333 163 | | Stopsel / Plug / Obturateur / Plugg / Tappo | 1 | 1 | 1 | 1 | |
| 15 | 27 63 1 333 159 | | Schalthebel / Shift lever / Levier de manoeuvre / Kopplingsspak / Leva di comando | 1 | 1 | 1 | 1 | |
| 16 | 27 63 1 333 160 | | O-Ring / O-ring / Joint torique / O-ring / Anello-O | 1 | 1 | 1 | 1 | |
| 17 | 27 63 1 333 157 | | Schaltgehäuse / Shift housing / Boîtier de manoeuvre / Kopplingshus / Carter di manovra | 1 | 1 | 1 | 1 | |
| 18 | 27 63 1 333 162 | | Druckfeder / Return spring / Ressort de pression / Tryckfjäder / Molla di compressione | 1 | 1 | 1 | 1 | |
| 19 | 27 63 1 333 161 | | Schaltstift / Shift pin / Broche de manoeuvre / Kopplingsstift / Perno di manovra | 1 | 1 | 1 | 1 | |
| 20 | 27 63 1 333 158 | | Schaltwelle / Shift shaft / Arbre de manoeuvre / Kopplingsaxel / Albero d. comando | 1 | 1 | 1 | 1 | |
| 21 | 27 63 1 333 156 | | kpl. Schaltung / Shift / Equipement de manoeuvre / Koppling / Dispositivo di manovra | 1 | 1 | 1 | 1 | |

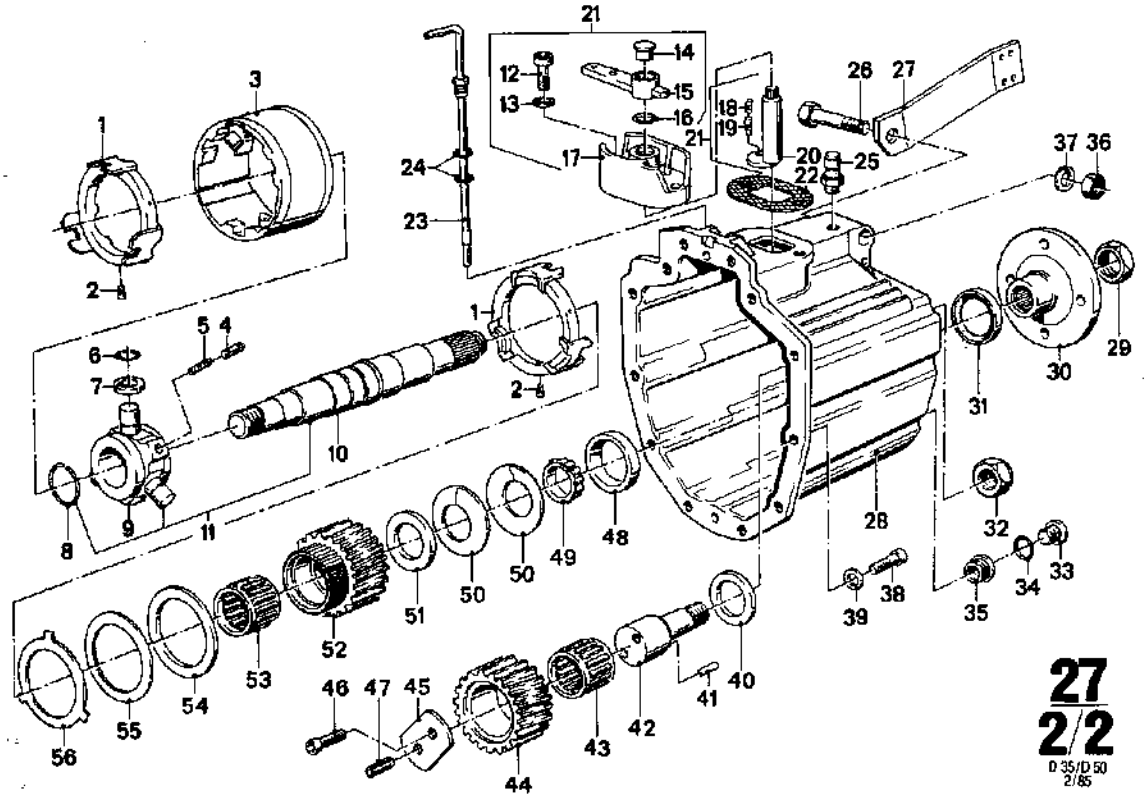


**27 2/2** 2/85

| Nr. | Teile-Nummer | Symbol | Benennung | D 35–1 | D 35–2 | D 50–1 | D 50–2 | Bemerkung |
|---|---|---|---|---|---|---|---|---|
| 22 | 27 63 1 333 164 | | Dichtung / Seal / Garniture / Packning / Guarnizione | 1 | 1 | 1 | 1 | |
| 23 | 27 63 1 333 154 | | Ölmeßstab / Dipstick / Jauge d'huile / Oljemätssticka / Asta controllo livello olio | 1 | 1 | 1 | 1 | |
| 24 | 27 63 1 333 155 | | O-Ring / O-ring / Joint torique / O-ring / Anello-O | 2 | 2 | 2 | 2 | |
| 25 | 27 63 1 333 219 | | kpl. Entlüftungsventil / Bleed vlave / Soupape de purge / Luftningsventil / Valvola spurgo dria | 1 | 1 | 1 | 1 | |
| 26 | 07 11 9 912 868 | | 6 KT SHR M 14 × 65 | 1 | 1 | 1 | 1 | |
| 27 | 27 63 1 333 223 | | Gegenlager / Anchor / Contre-palier / Motlager / Controsupporto esterno | 1 | 1 | 1 | 1 | |
| 28 | 27 63 1 333 153 | | Gehäuse / Housing / Boîte / Hus / Scatola | 1 | 1 | 1 | 1 | |
| 29 | 27 63 1 333 165 | | 6 KT MU | 2 | 2 | 2 | 2 | |
| 30 | 27 63 1 333 222 | | Abtriebflansch / Coupling flange / Flasque de sortie / Driven fläns / Flangia d. transmissione | 1 | 1 | 1 | 1 | |
| 31 | 27 63 1 333 221 | | DT RG | 1 | 1 | 1 | 1 | |
| 32 | 27 63 1 333 165 | | 6 KT MU | 1 | 1 | 1 | 1 | |
| 33 | 07 11 9 919 114 | | VSL SHR 14 × 1,5 | 1 | 1 | 1 | 1 | |
| 34 | 07 11 9 963 201 | | DT RG | 1 | 1 | 1 | 1 | |
| 35 | 27 63 1 333 232 | | Dichtung / Seal / Garniture / Packning / Guarnizione | 1 | 1 | 1 | 1 | |
| 36 | 07 11 9 922 150 | | 6 KT MU M 14 | 1 | 1 | 1 | 1 | |
| 37 | 07 11 9 931 088 | | Scheibe / Washer / Rondelle / Bricka / Rondella | 1 | 1 | 1 | 1 | |
| 38 | 07 11 9 919 978 | | ZYL SHR M 8 × 25 | 12 | 12 | 12 | 12 | |
| 39 | 07 11 9 931 560 | | 8,4 Scheibe / Washer / Rondelle / Bricka / Rondella | 12 | 12 | 12 | 12 | |
| 40 | 27 63 1 333 218 | | Anlaufscheibe / Thrust washer / Rondelle d'entrainem. / Passbricka / Rosetta di arresto | 1 | 1 | 1 | 1 | |
| 41 | 07 11 9 943 488 | | Kerbstift / Drive pin / Goupille cannelée / Skårstift / Chiodo a gola | 1 | 1 | 1 | 1 | |
| 42 | 27 63 1 333 217 | | Radbolzen / Wheel stud / Axe de roue / Hjulbult / Bullone fissaggio ruota | 1 | 1 | 1 | 1 | |
| 43 | 27 63 1 333 179 | | Nadelkäfig / Needle cage / Cage d'aiguilles / Nållager / Gabbia ad aghi | 1 | 1 | 1 | 1 | |
| 44 | 27 63 1 333 178 | | Zwischenrad / Intermediate gear / Roue intermédiaire / Mellanhjul / Ruota intermedia | 1 | 1 | 1 | 1 | |
| 45 | 27 63 1 333 177 | | Spannplatte / Tightening plate / Plaque de serrage / Spännplatta / Piattaforma di fissaggio | 1 | 1 | 1 | 1 | |
| 46 | 07 11 9 919 979 | | ZYL SHR M 8 × 25 | 1 | 1 | 1 | 1 | |
| 47 | 07 11 9 941 351 | | Spannstift / Spring dowel sleeve / Goupille de serrage / Spännstif / Perno tenditore di fissaggio | 1 | 1 | 1 | 1 | |

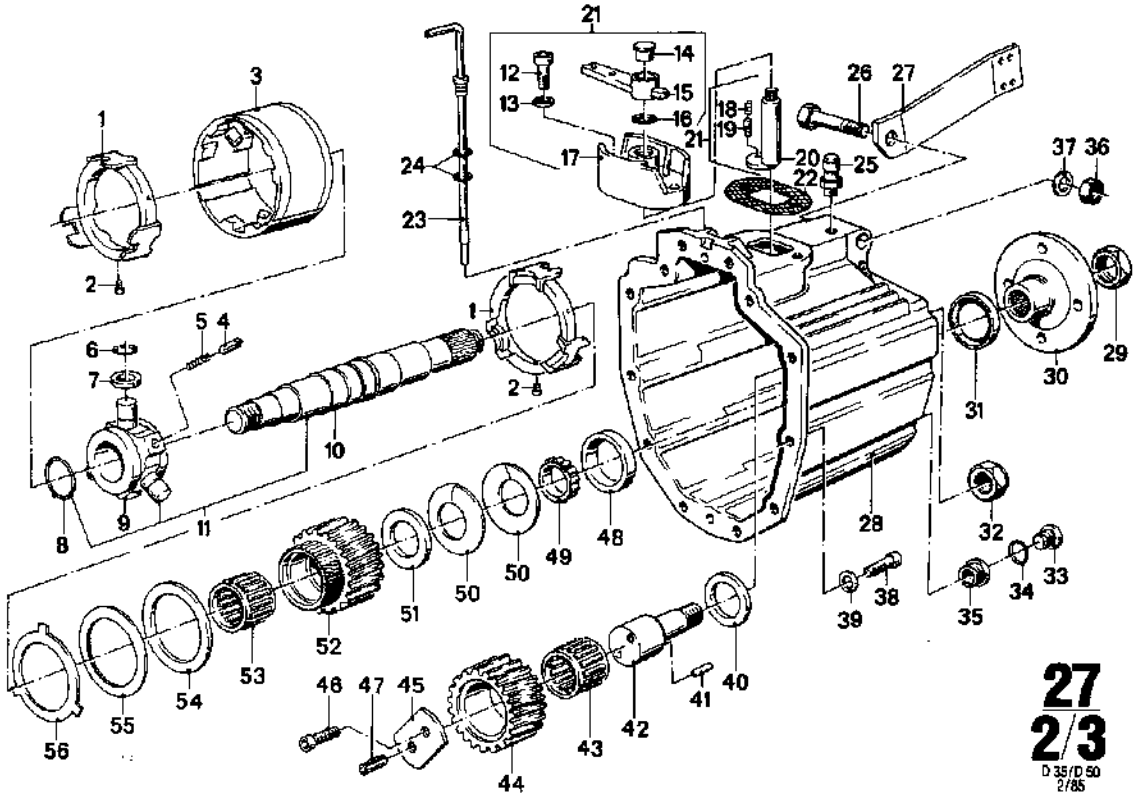


**27 2/3** 2/85

| Nr. | Teile-Nummer | Symbol | Benennung | D35–1 | D35–2 | D50–1 | D50–2 | Bemerkung |
|---|---|---|---|---|---|---|---|---|
| 48 | 27 63 1 333 220 | | Lageraußenring / Bearing outer race / Bague extérieure de roulement / Ytterring, lager / Anello esterno del cuscinetto | 2 | 2 | 2 | 2 | |
| 49 | 27 63 1 333 183 | | Lagerinnenring / Bearing inner race / Bague intérieure de roulement / Innerring, lager / Anello interno del cuscinetto | 2 | 2 | 2 | 2 | |
| 50 | 27 63 1 333 185 | | Federscheibe / Spring washer / Rondelle élastique / Fjäderbricka / Rosetta elastico | 4 | 4 | 4 | 4 | |
| 51 | 27 63 1 333 186 | | 4,4 Anlaufscheibe / Check disk / Rondelle de butée / Startskiva / Rosetta di arresto | X | X | X | X | |
| | 27 63 1 333 187 | | 4,6 dito | X | X | X | X | |
| 52 | 27 63 1 333 188 | | Konstantrad / Constant wheel / Roue constante / Konstanthjul / Ruota costante | 1 | 1 | 1 | 1 | |
| 53 | 27 63 1 333 189 | | Nadelkäfig / Needle cage / Cage d'aiguilles / Nållager / Gabbia ad aghi | 2 | 2 | 2 | 2 | |
| | | | Endscheiben / End disks / rondelles d'extrémité / Ändskiva / Disco terminale | | | | | |
| 54 | 27 63 1 333 190 | | 2,9 | X | X | X | X | |
| | 27 63 1 333 191 | | 3,0 | X | X | X | X | |
| | 27 63 1 333 192 | | 3,1 | X | X | X | X | |
| | 27 63 1 333 193 | | 3,2 | X | X | X | X | |
| | 27 63 1 333 194 | | 3,3 | X | X | X | X | |
| | 27 63 1 333 195 | | 3,4 | X | X | X | X | |
| | 27 63 1 333 196 | | 3,5 | X | X | X | X | |
| | 27 63 1 333 197 | | 3,6 | X | X | X | X | |
| | 27 63 1 333 198 | | 3,7 | X | X | X | X | |
| | 27 63 1 333 199 | | 3,8 | X | X | X | X | |
| | 27 63 1 333 200 | | 3,9 | X | X | X | X | |
| | 27 63 1 333 201 | | 4,0 | X | X | X | X | |
| | 27 63 1 333 202 | | 4,1 | X | X | X | X | |
| | 27 63 1 333 203 | | 4,2 | X | X | X | X | |
| 55 | 27 63 1 333 204 | | Innenlamelle / Inner disk / Disque inérieur / Inre lamell / Disco interno | 1 | 1 | 1 | 1 | |
| 56 | 27 63 1 333 205 | | Außenlamelle / Outer disk / Disque extérieur / Yttre lamell / Lamella esterna | 2 | 2 | 2 | 2 | |

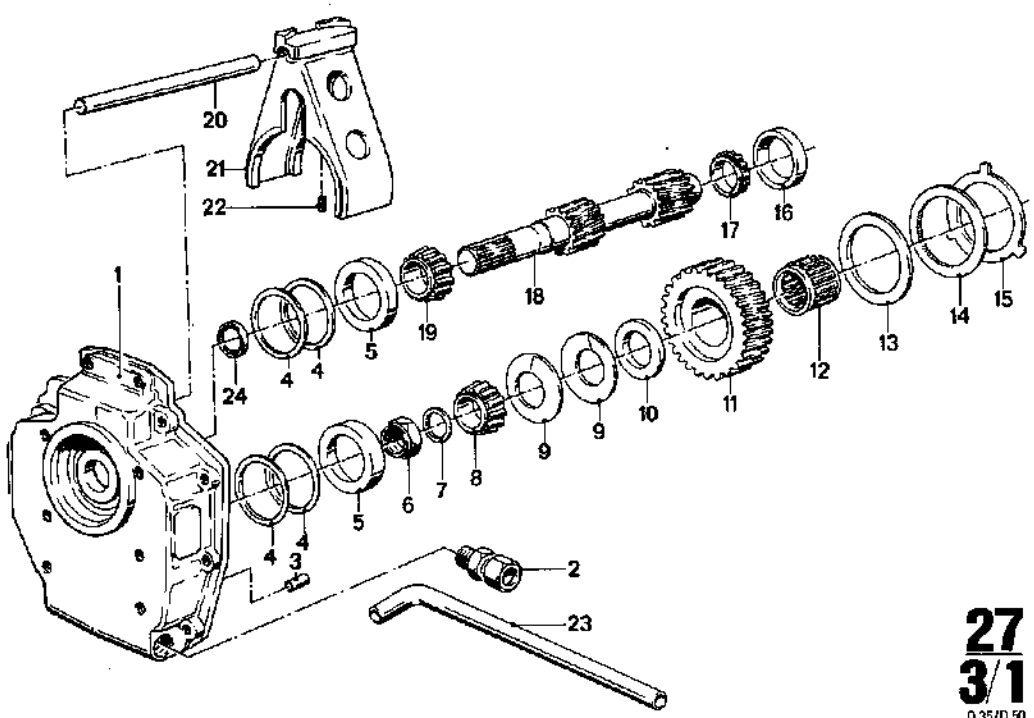


**27 3/1**
D 35/D 50
2/85

| 27 3/1 2/85 | | | | | | | | | |
|---|---|---|---|---|---|---|---|---|---|
| Nr. | Teile-Nummer | Symbol | Benennung | | D35–1 | D35–2 | D50–1 | D50–2 | Bemerkung |
| 1 | a 27 63 1 333 152 | | Schild / Shield / Plaquette / Skylt / Scudo | | 1 | | 1 | | |
| | 27 63 1 333 805 | | Schild mit Rohr / Shield with tube / Plaquette avec tuyau / Skylt med rör / Scudo con tubo | | | 1 | | 1 | |
| 2 | 27 63 1 333 225 | | Verschraubung / Coupling / Boulonnage / Förskruvning / Avvitamento | | 2 | | 2 | | |
| 3 | 07 11 9 942 156 | | ZYLSTI | | 2 | 2 | 2 | 2 | |
| | | | Scheibe / Washer / Rondelle / Bricka / Rondella | | | | | | |
| 4 | 27 63 1 333 167 | | 0,6 | | X | X | X | X | |
| | 27 63 1 333 168 | | 0,5 | | X | X | X | X | |
| | 27 63 1 333 169 | | 0,4 | | X | X | X | X | |
| | 27 63 1 333 170 | | 0,3 | | X | X | X | X | |
| | 27 63 1 333 171 | | 0,2 | | X | X | X | X | |
| | 27 63 1 333 172 | | 0,1 | | X | X | X | X | |
| | 27 63 1 333 173 | | 0,15 | | X | X | X | X | |
| | 27 63 1 333 174 | | 0,65 | | X | X | X | X | |
| | 27 63 1 333 175 | | 0,7 | | X | X | X | X | |
| 5 | 27 63 1 333 166 | | Lageraußenring / Bearing outer race / Bague extérieure de roulement / Ytterring, lager / Anello esterno del cuscinetto | | 2 | 2 | 2 | 2 | |
| 6 | 27 63 1 333 165 | | 6 KT MU | | 2 | 2 | 2 | 2 | |
| 7 | 27 63 1 333 184 | | Stützscheibe / Backup washer / Rondelle d'appui / Stödskiva / Disco di sostegno | | 1 | 1 | 1 | 1 | |
| 8 | 27 63 1 333 182 | | Lagerinnenring / Bearing inner race / Bague intérieure de roulement/ Innerring, lager / Anello interno del cuscinetto | | 2 | 2 | 2 | 2 | |
| 9 | 27 63 1 333 185 | | Federscheibe / Spring washer / Rondelle élastique / Fjäderbricka / Rosetta elastico | | 4 | 4 | 4 | 4 | |
| 10 | 27 63 1 333 186 | | 4,4 Anlaufscheibe / Check disk / Rondelle de butée / Startskiva / Rosetta di arresto | | X | X | X | X | |
| | 27 63 1 333 187 | | 4,6 dito | | X | X | X | X | |
| 11 | 27 63 1 333 228 | | i = 2,05 Abtriebsrad / Output sheel / Roue de sortie / Drivet hjul / Ingranaggio condotto | | | | 1 | 1 | |
| | 27 63 1 333 231 | | i = 2,47 dito | | 1 | 1 | | | |
| 12 | 27 63 1 333 189 | | Nadelkäfig / Needle cage / Cage d'aiguilles / Nållager / Gabbia ad aghi | | 2 | 2 | 2 | 2 | |

a) ohne Kühlrohr / without cooling pipe / sans tube de refroidissement / utan kylrör / senza tubo di raffreddamento

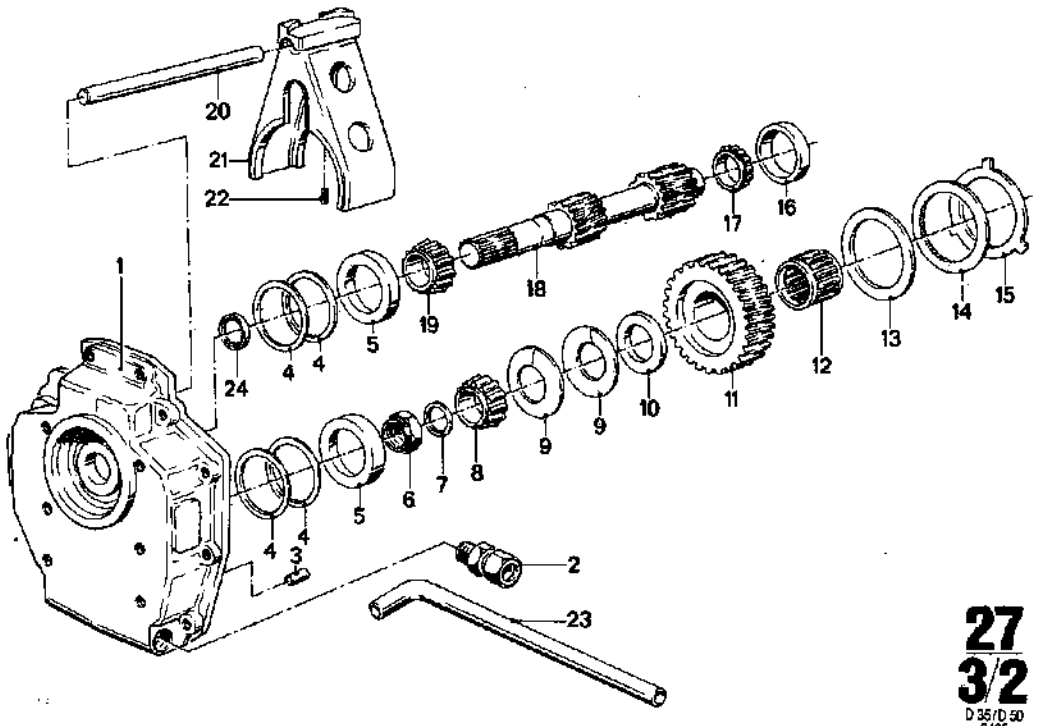


**27 3/2**
D 35/D 50
2/85

**27 3/2** 2/85

| Nr. | Teile-Nummer | Symbol | Benennung | D 35–1 | D 35–2 | D 50–1 | D 50–2 | Bemerkung |
|---|---|---|---|---|---|---|---|---|
| | | | Endscheibe / End disks / Rondelles d'extrémité / Ändskiva / Disco terminale | | | | | |
| 13 | 27 63 1 333 190 | | 2,9 | X | X | X | X | |
| | 27 63 1 333 191 | | 3,0 | X | X | X | X | |
| | 27 63 1 333 192 | | 3,1 | X | X | X | X | |
| | 27 63 1 333 193 | | 3,2 | X | X | X | X | |
| | 27 63 1 333 194 | | 3,3 | X | X | X | X | |
| | 27 63 1 333 195 | | 3,4 | X | X | X | X | |
| | 27 63 1 333 196 | | 3,5 | X | X | X | X | |
| | 27 63 1 333 197 | | 3,6 | X | X | X | X | |
| | 27 63 1 333 198 | | 3,7 | X | X | X | X | |
| | 27 63 1 333 199 | | 3,8 | X | X | X | X | |
| | 27 63 1 333 200 | | 3,9 | X | X | X | X | |
| | 27 63 1 333 201 | | 4,0 | X | X | X | X | |
| | 27 63 1 333 202 | | 4,1 | X | X | X | X | |
| | 27 63 1 333 203 | | 4,2 | X | X | X | X | |
| 14 | 27 63 1 333 205 | | Außenlamelle / Outer disk / Disque extérieur / Yttre lamell / Lamella esterna | 2 | 2 | 2 | 2 | |
| 15 | 27 63 1 333 204 | | Innenlamelle / Inner disk / Disque intérieur / Inre lamell / Disco interno | 1 | 1 | 1 | 1 | |
| 16 | 27 63 1 333 220 | | Lageraußenring / Bearing outer race / Bague extérieure de roulement / Ytterring, lager / Anello esterno del cuscinetto | 2 | 2 | 2 | 2 | |
| 17 | 27 63 1 333 183 | | Lagerinnenring / Bearing inner race / Bague intérieure de roulement / Innerring, lager / Anello interno del cuscinetto | 2 | 2 | 2 | 2 | |
| 18 | 27 63 1 333 227 | | i = 2,05 Antriebswelle / Input shaft / Arbre primaire / Ingående axel / Albero primario | | | 1 | 1 | |
| | 27 63 1 333 230 | | i = 2,47 dito | 1 | 1 | | | |
| 19 | 27 63 1 333 182 | | Lagerinnenring / Bearing inner race / Bague intérieure de roulement / Innerring, lager / Anello interno del cuscinetto | 2 | 2 | 2 | 2 | |
| 20 | 27 63 1 333 181 | | Schaltschiene / Shift bar / Tige de commande de fourchette / Kopplingskena / Asta a forcella di comando | 1 | 1 | 1 | 1 | |
| 21 | 27 63 1 333 180 | | Schaltgabel / Shift fork / Fourchette de manoeuvre / Kopplingsgaffel / Forcella | 1 | 1 | 1 | 1 | |
| 22 | 07 11 9 904 817 | | GEWSTIFT M 6 × 12 | 1 | 1 | 1 | 1 | |
| 23 | 27 63 1 333 224 | | Kühlrohr / Cooling pipe / Tube de refroidissement / Kylrör / Tubo di raffreddamento | 1 | 1 | 1 | 1 | |
| 24 | 27 63 1 333 176 | | DT RG | 1 | 1 | 1 | 1 | |

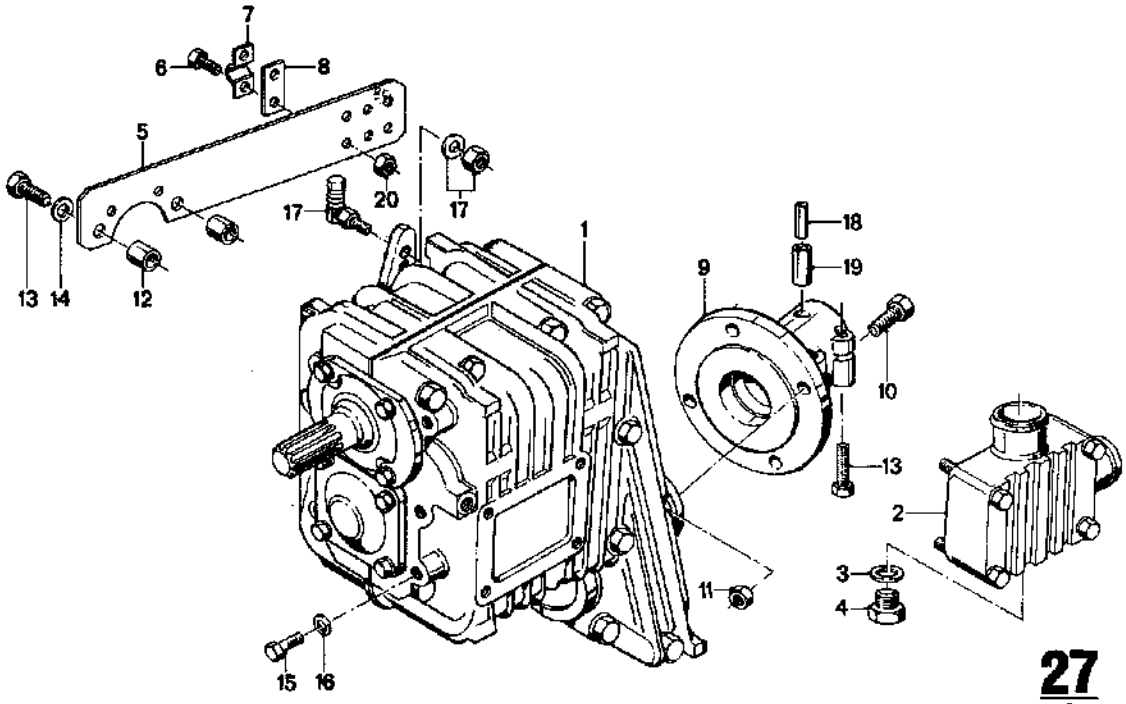


**27 / 4**

D35/D50
2/85

**27 / 4** 2/85

| Nr. | Teile-Nummer | Symbol | Benennung | D 35–1 | D 35–2 | D 50–1 | D 50–2 | Bemerkung |
|---|---|---|---|---|---|---|---|---|
| 1 | 27 63 1 761 064 | | kpl. i = 1,8 Wendegetriebe / Reversing transmission / Réducteur-inverseur / Backväxel / Cambio ad inversione di marcia | 1 | 1 | 1 | 1 | HBW – 150 V |
| | 27 63 1 761 085 | | kpl. i = 2,0 dito | 1 | 1 | 1 | 1 | HBW – 150 V |
| | 27 63 1 761 086 | | kpl. i = 3,0 dito | 1 | 1 | 1 | 1 | HBW – 150 V |
| 2 | 27 63 1 761 857 | | kpl. Kühlerdeckel / Radiator cover / Couvercle de radiateur / Kylarlock / Tappo radiatore | 1 | 1 | 1 | 1 | |
| 3 | 07 11 9 963 252 | | DT RG | 1 | 1 | 1 | 1 | |
| 4 | 07 11 9 919 171 | | VSL SHR | 1 | 1 | 1 | 1 | |
| 5 | 27 63 1 333 793 | | Halteblech / Retaining plate / Tôle de retenue / Fästplåt / Lamiera di stostegno | 1 | 1 | 1 | 1 | |
| 6 | 07 11 9 913 241 | | 6 KT SHR M 5 × 16 | 2 | 2 | 2 | 2 | |
| 7 | 13 21 1 326 574 | | Klemmbügel / Clamp strap / Etrier de serrage / Klämbygel / Staffa di serraggio | 1 | 1 | 1 | 1 | |
| 8 | 13 21 1 330 287 | | Distanzblech / Spacing plate / Tôle d'écartement / Distansbleck / Lamiera distanziatore | 1 | 1 | 1 | 1 | |
| 9 | 27 63 1 333 368 | | Wellenkupplung / Shaft coupling / Accouplement d'arbre d'hélice / Axelkoppling / Accoppiamento di due alberi | 1 | 1 | 1 | 1 | |
| 10 | 07 11 9 913 837 | | 6 KT SHR M 10 × 30 | 4 | 4 | 4 | 4 | |
| 11 | 07 11 9 922 113 | | 6 KT MU M 10 | 4 | 4 | 4 | 4 | |
| 12 | 27 63 1 761 106 | | Distanzbuchse / Spacer socket / Douille d'écartement / Distanshylsa / Boccola distanziatore | 2 | 2 | 2 | 2 | |
| 13 | 07 11 9 913 676 | | 6 KT SHR M 8 × 35 | 8 | 8 | 8 | 8 | |
| 14 | 07 11 9 931 067 | | A 8,4 Scheibe / Washer / Rondelle / Bricka / Rondella | 2 | 2 | 2 | 2 | |
| 15 | 07 11 9 913 839 | | 6 KT SHR M 10 × 30 | 6 | 6 | 6 | 6 | |
| 16 | 07 11 9 932 112 | | B 10 Federscheibe / Spring washer / Rondelle élastique / Fjäderbricka / Rosetta elastico | 6 | 6 | 6 | 6 | |
| 17 | 27 63 1 763 200 | | Kugelgelenk / Globe joint / Joint à rotule / Kulled / Snodo sferico | 1 | 1 | 1 | 1 | |
| 18 | 07 11 9 941 341 | | 5 × 50 Spannstift / Spring dowel sleeve / Goupille de serrage / Spännstift / Perno tenditore di fissaggio | 1 | 1 | 1 | 1 | |
| 19 | 07 11 9 941 345 | | 8 × 50 dito | 1 | 1 | 1 | 1 | |

Getriebe-Gehäuse – HBW-150 V
Gearbox-Housing – HBW-150 V
Boîte à vitesse-Boîte – HBW-150 V
Växel-Hus – HBW-150 V
Gruppo propulsore-Scatola – HBW-150 V

BMW D 35 / D 50

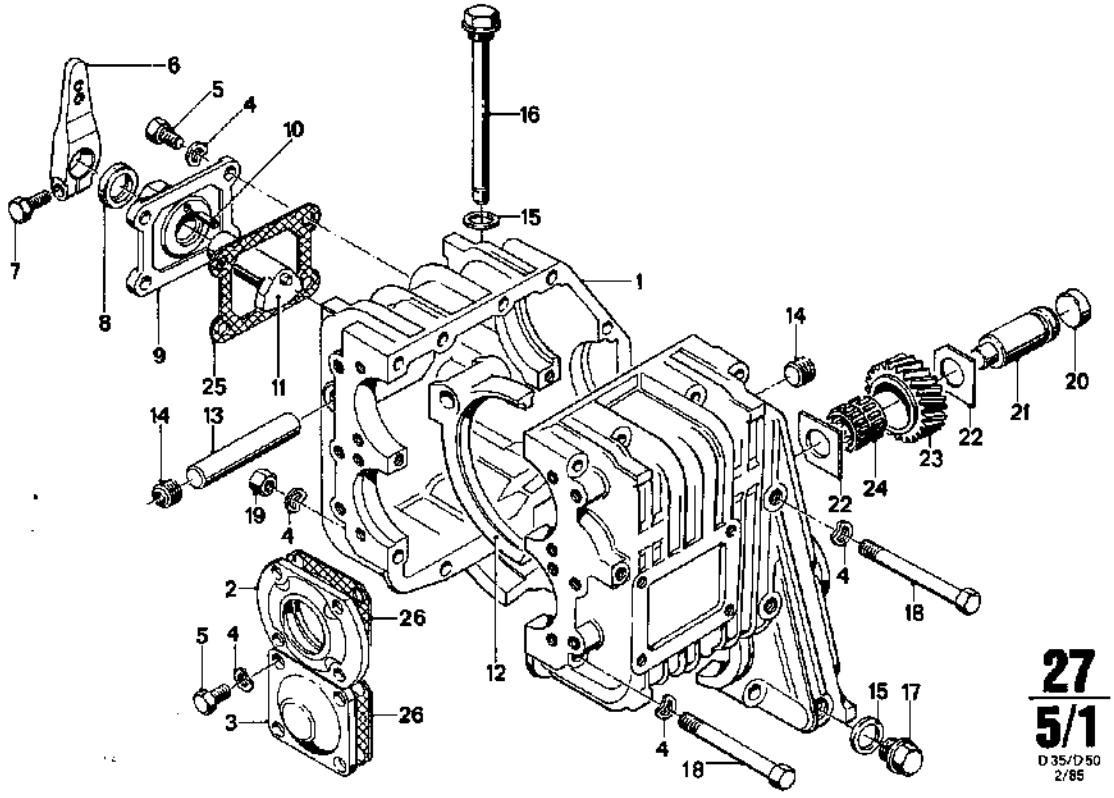


| 27 5/1 2/85 | | | | D 35 – 1 | D 35 – 2 | D 50 – 1 | D 50 – 2 | | |
|---|---|---|---|---|---|---|---|---|---|
| Nr. | Teile-Nummer | Symbol | Benennung | | | | | | Bemerkung |
| 1 | 27 63 1 761 490 | | Gehäuse / Housing / Boîte / Hus / Scatola | | 1 | 1 | 1 | 1 | |
| 2 | 27 63 1 761 462 | | Deckel / Cover / Couvercle / Lock / Coperchio | | 1 | 1 | 1 | 1 | |
| 3 | 27 63 1 761 492 | | dito | | 1 | 1 | 1 | 1 | |
| 4 | 07 11 9 932 095 | | B 8 Federscheibe / Spring washer / Rondelle élastique / Fjäderbricka / Rosetta elastico | | 40 | 40 | 40 | 40 | |
| 5 | 07 11 9 913 624 | | 6 KT SHR M 8 × 16 | | 12 | 12 | 12 | 12 | |
| 6 | 27 63 1 331 264 | | Schalthebel / Gear shift lever / Levier de commande / Växelspak / Leva di comando | | 1 | 1 | 1 | 1 | |
| 7 | 07 11 9 913 644 | | 6 KT SHR M 8 × 20 | | 1 | 1 | 1 | 1 | |
| 8 | 27 63 1 331 270 | | Wellendichtring / Shaft seal / Bague d'etanchéite radiale / Tätningsring axel / Anello di tenuta | | 1 | 1 | 1 | 1 | |
| 9 | 27 63 1 331 265 | | Schaltdeckel / Gear shift cover / Couvercle de commande / Växelhuslock / Copricambio | | 1 | 1 | 1 | 1 | |
| 10 | 07 11 9 941 385 | | Spannhülse / Clamping sleeve / Douille de serrage / Spännhylsa / Boccola a tache | | 1 | 1 | 1 | 1 | |
| 11 | 27 63 1 331 266 | | Schaltnocke / Shifting cam / Came de commande / Växelham / Camma di comando | | 1 | 1 | 1 | 1 | |
| 12 | 27 63 1 761 453 | | Schaltgabel / Shift fork / Fourchette de changement de vitesse / Växelförare / Forcella | | 1 | 1 | 1 | 1 | |
| 13 | 27 63 1 761 489 | | Schaltstange / Shift rod / Arbre de commande des vitesses / Växelfoxaxel / Asta d. comando | | 1 | 1 | 1 | 1 | |
| 14 | 07 11 9 919 016 | | VSL SHR M 16 × 1,5 | | 1 | 1 | 1 | 1 | |
| 15 | 27 63 1 761 423 | | DT RG | | 2 | 2 | 2 | 2 | |
| 16 | 27 63 1 331 295 | | Ölmeßstab / Dipstick / Jauge d'huile / Oljemätsticka / Asta controllo livello olio | | 1 | 1 | 1 | 1 | |
| 17 | 27 63 1 331 262 | | VSL SHR | | 1 | 1 | 1 | 1 | |
| 18 | 07 11 9 912 567 | | 6 KT SHR M 8 × 90 | | 14 | 14 | 14 | 14 | |
| 19 | 07 11 9 922 087 | | 6 KT MU M 8 | | 11 | 11 | 11 | 11 | |

Getriebe-Gehäuse – HBW-150 V
Gearbox-Housing – HBW-150 V
Boîte à vitesse-Boîte – HBW-150 V
Växel-Hus – HBW-150 V
Gruppo propulsore-Scatola – HBW-150 V



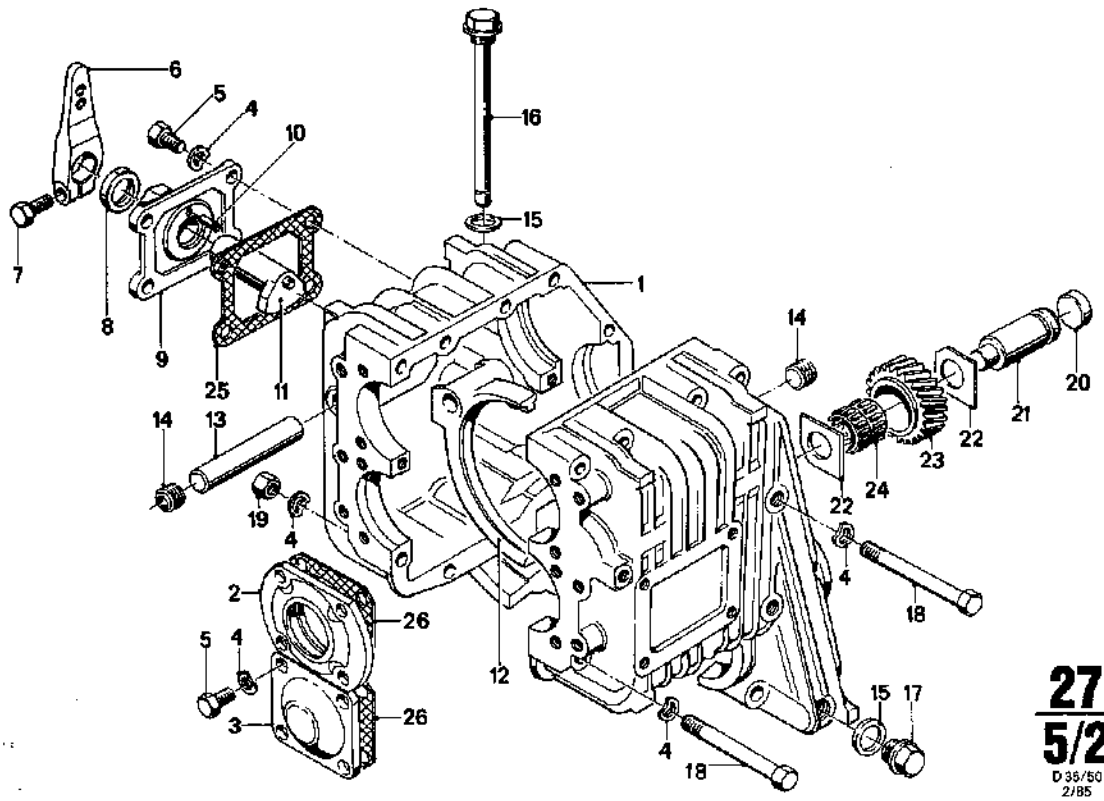


**27/5/2** D 35/50 2/85

**27/5/2** 2/85

| Nr. | Teile-Nummer | Symbol | Benennung | D 35–1 | D 35–2 | D 50–1 | D 50–2 | Bemerkung |
|---|---|---|---|---|---|---|---|---|
| 20 | 07 11 9 937 275 | | VSL Deckel / Cover / Lock / Couvercle / Coperchio | 1 | 1 | 1 | 1 | |
| 21 | 27 63 1 761 454 | | Welle / Shaft / Arbre / Axel / Albero | 1 | 1 | 1 | 1 | |
| 22 | 27 63 1 761 491 | | Anlaufscheibe / Thrust washer / Rondelle d'éntrainem. Passbricka / Rosetta di arresto | 2 | 2 | 2 | 2 | |
| 23 | 27 63 1 761 451 | | Z 26 Zwischenrad / Intermediate gear / Roue intermédiaire / Mellanhjul / Ruota intermedia | 1 | 1 | 1 | 1 | |
| 24 | 27 63 1 761 457 | | Doppelkammkäfig / Double-collar thrust cage / Cage à double cannelure / Dubbelkammbur / Cuscinetto a doppio collare | 1 | 1 | 1 | 1 | |
| 25 | 27 63 1 331 271 | | Dichtung / Seal / Garniture / Packning / Guarnizione | 1 | 1 | 1 | 1 | |
| 26 | 27 63 1 761 468 | | dito | 2 | 2 | 2 | 2 | |

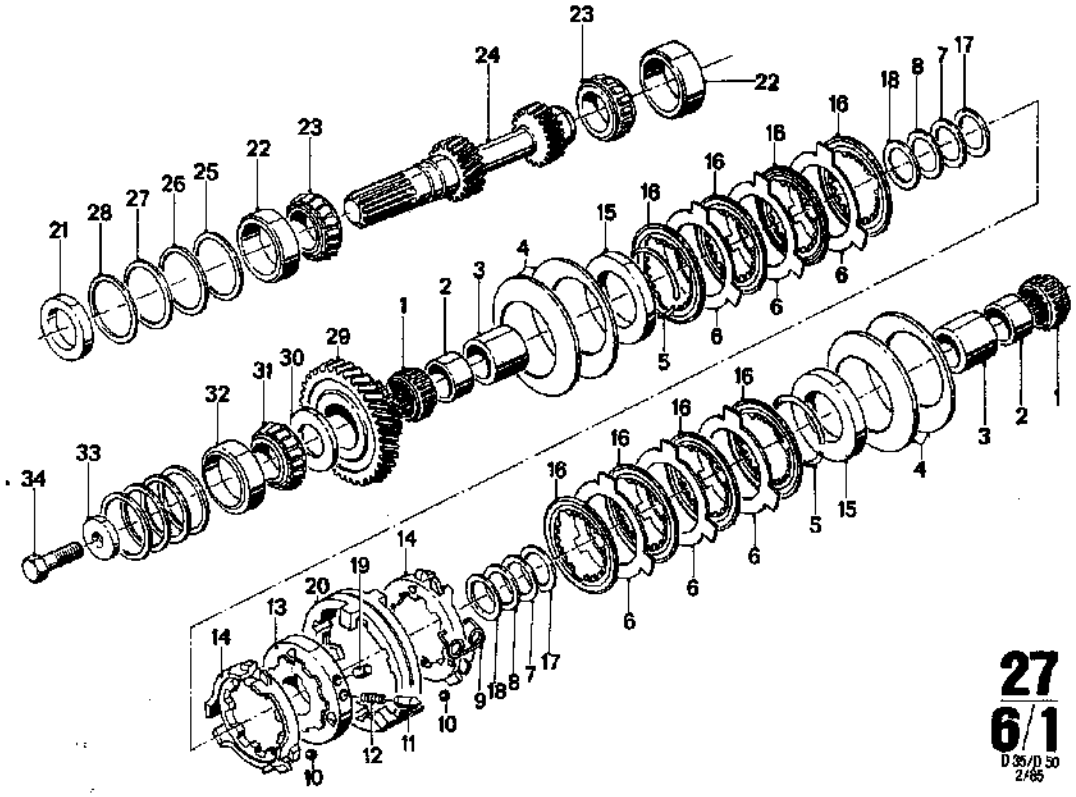


## 27 6/1 2/85

| Nr. | Teile-Nummer | Symbol | Benennung | D 35–1 | D 35–2 | D 50–1 | D 50–2 | Bemerkung |
|---|---|---|---|---|---|---|---|---|
| 1 | 27 63 1 761 479 | | Nadelkäfig / Needle cage / Cage d'aiguilles / Nållager / Gabbia ad aghi | 2 | 2 | 2 | 2 | |
| 2 | 27 63 1 761 475 | | Nadellager-Innenring / Needle roller bearing inner ring / Bague intérieure de roulement à aiguilles / Nållager-innerring / Anello interno cuscinetto ad aghi | 2 | 2 | 2 | 2 | |
| 3 | 27 63 1 761 472 | | Abstandsring / Spacer ring / Bague d'écartement / Mellanbricka / Anello distanziat. | 2 | 2 | 2 | 2 | |
| 4 | 27 63 1 761 476 | | Tellerfeder / Diaphragm spring / Ressort belleville / Tallriksfjäder / Molla di disco | 4 | 4 | 4 | 4 | |
| 5 | 27 63 1 761 478 | | Sprengring / Expansion ring / Anneau d'expansion / Låsring / Anello elastico | 2 | 2 | 2 | 2 | |
| 6 | 27 63 1 761 474 | | Außenlamelle / Outer disk / Disque extérieur / Yttre lamell / Lamella esterna | 6 | 6 | 6 | 6 | |
| 7 | 27 62 1 328 176 | | 0,6 Ausgleichscheibe / Compensation shim / Disque de compensation / Mellanlägg / Rondella di spessore | 2 | 2 | 2 | 2 | |
| 8 | 27 62 1 328 175 | | 0,5 dito | 2 | 2 | 2 | 2 | |
| 9 | 27 62 1 328 204 | | Drehfeder / Torsion spring / Barre de torsion / Dragfjäder / Molla girevole | 3 | 3 | 3 | 3 | |
| 10 | 07 11 9 986 280 | | Ø 8 mm Kugel / Ball / Bille / Kula / Sfera | 6 | 6 | 6 | 6 | |
| 11 | 27 62 1 328 202 | | Arretierstift / Retaining pin / Cheville d'arrêt / Låspinne / Bullone d'arresto | 3 | 3 | 3 | 3 | |
| 12 | 27 62 1 328 162 | | Druckfeder / Compression spring / Ressort de pression / Tryckfjäder / Molla di compressione | 3 | 3 | 3 | 3 | |
| 13 | 27 63 1 761 460 | | Führungsmuffe / Guide sleeve / Douille de guidage / Styrmuff / Manicotto d. guida | 1 | 1 | 1 | 1 | |
| 14 | 27 63 1 761 458 | | Lamellenträger / Disk carrier / Support de disque / Lamellhållare / Portalamelle | 2 | 2 | 2 | 2 | |
| 15 | 27 63 1 761 471 | | Druckscheibe / Thrust washer / Ressort belle ville / Tallriskfjäder / Rosetta di pressione | 2 | 2 | 2 | 2 | |
| 16 | 27 63 1 761 473 | | Innenlamelle / Inner disk / Disque intérieur / Yttre lamell / Disco interno | 8 | 8 | 8 | 8 | |
| 17 | 27 62 1 328 177 | | 0,7 Ausgleichsscheibe / Compensation shim / Disque de compensation / Mellanlägg / Rondella di spessore | 2 | 2 | 2 | 2 | |

a) HBW-150 V – 1,8
b) HBW-150 V – 2,0
c) HBW-150 V – 3,0

Getriebe – HBW-150 V
Gearbox – HBW-150 V
Boîte à vitesse – HBW-150 V
Växel – HBW-150 V
Gruppo propulsore – HBW-150 V



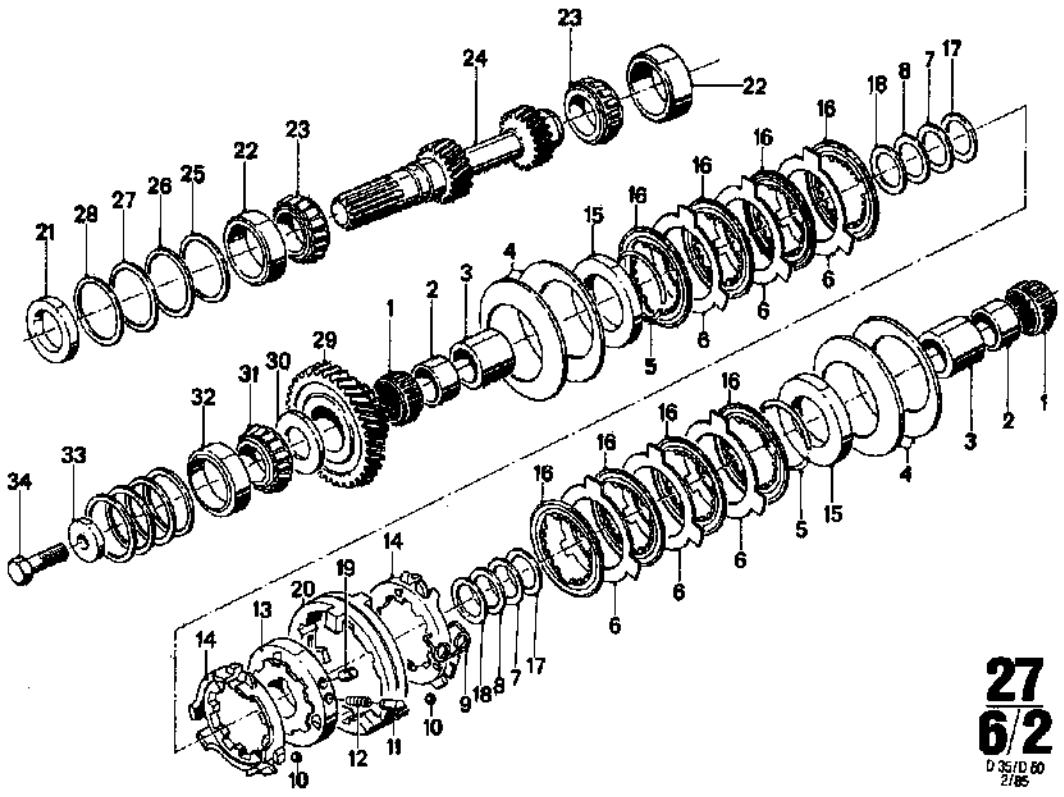

**27 6/2**
D 35/D 50 2/85

**27 6/2** 2/85

| Nr. | Teile-Nummer | Symbol | Benennung | D 35–1 | D 35–2 | D 50–1 | D 50–2 | Bemerkung |
|---|---|---|---|---|---|---|---|---|
| 18 | 27 62 1 328 174 | | 0,4 dito | 2 | 2 | 2 | 2 | |
| 19 | 27 82 1 328 203 | | Mitnehmerstift / Driving pin / Broche d'entrainement / Medbringarstift / Perno di trascinamento | 3 | 3 | 3 | 3 | |
| 20 | 27 63 1 761 459 | | Schaltmuffe / Gear shift sleeve / Douille de commande / Kopplingsmuff / Manicotto di comando | 1 | 1 | 1 | 1 | |
| 21 | 27 63 1 761 465 | | Radialwellendichtring / Radial shaft sealing ring / Joint d'arbre / Radiell axeltätning / Anello di tenuta albero radiale | 1 | 1 | 1 | 1 | |
| 22 | 27 62 1 328 390 | | Lageraussenring / Bearing outer race / Bague extérieure de roulement / Yttering, lager / Anello esterno del cuscinetto | 2 | 2 | 2 | 2 | |
| 23 | 27 62 1 328 389 | | Lagerinnenring / Bearing inner race / Bague intérieure de roulement / Innering, lager / Anello interno del cuscinetto | 1 | 1 | 1 | 1 | |
| 24 | a 27 63 1 761 487 | | Z = 27/22 Antriebswelle / Drive shaft / Arbre de commande / Motoraxel / Albero primario | 1 | 1 | 1 | 1 | |
| | b 27 63 1 761 485 | | Z = 24/22 dito | 1 | 1 | 1 | 1 | |
| | c 27 63 1 761 483 | | Z = 19/22 dito | 1 | 1 | 1 | 1 | |
| 25 | 27 62 1 328 150 | | 1,0 Ausgleichsscheibe / Compensation shim Disque de compensation / Mellanlägg / Rondella di spessore | 2 | 2 | 2 | 2 | |
| 26 | 27 62 1 328 151 | | 0,5 dito | 2 | 2 | 2 | 2 | |
| 27 | 27 62 1 328 149 | | 0,2 dito | 2 | 2 | 2 | 2 | |
| 28 | 27 62 1 328 147 | | 0,1 dito | 2 | 2 | 2 | 2 | |
| 29 | a 27 63 1 761 488 | | Z = 42 Zahnrad / Toothed wheel / Roue dentée / Kugghjul / Ruota dentata | 1 | 1 | 1 | 1 | |
| | b 27 63 1 761 486 | | Z = 45 dito | 1 | 1 | 1 | 1 | |
| | c 27 63 1 761 484 | | Z = 50 dito | 1 | 1 | 1 | 1 | |
| 30 | 27 63 1 761 489 | | Scheibe / Washer / Rondelle / Bricka / Rondella | 2 | 2 | 2 | 2 | |

a) HBW-150 V – 1,8
b) HBW-150 V – 2,0
c) HBW-150 V – 3,0

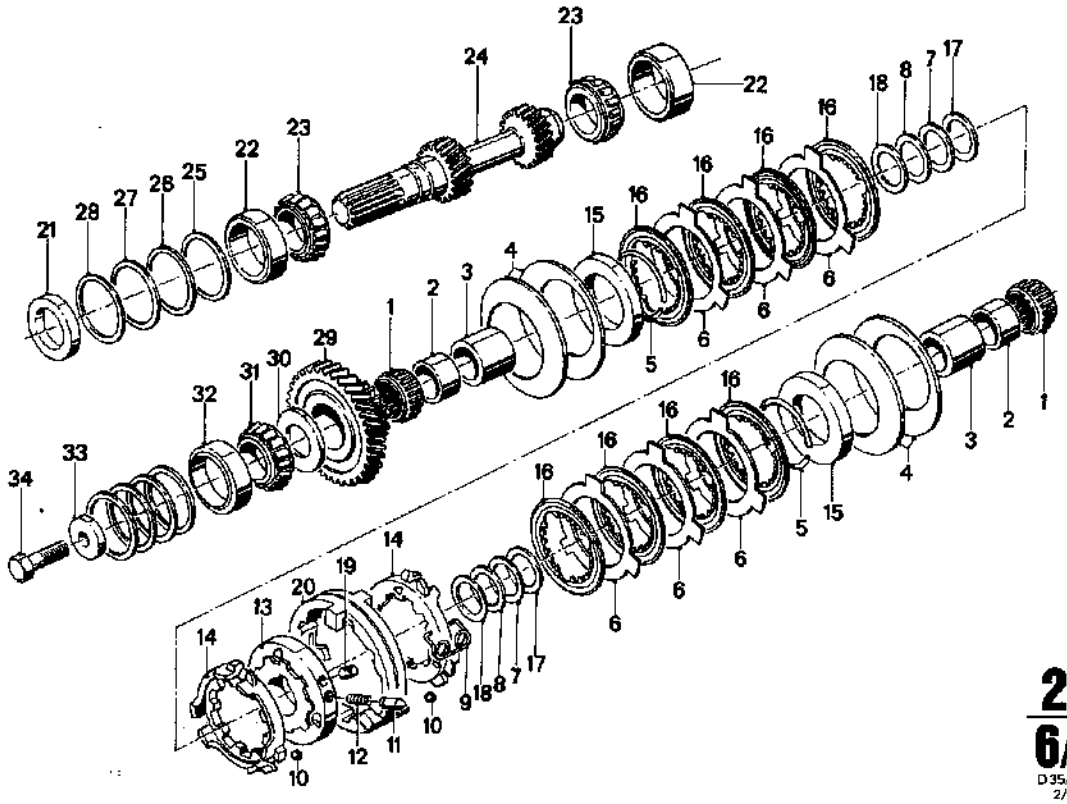

**27 / 6/3**
D35/D50
2/85

**27 / 6/3** 2/85

| Nr. | Teile-Nummer | Symbol | Benennung | D35–1 | D35–2 | D50–1 | D50–2 | Bemerkung |
|---|---|---|---|---|---|---|---|---|
| 31 | 27 63 1 761 496 | | Lagerinnenring / Bearing inner race / Bague intérieure de roulement / Innering, lager / Anello interno del cuscinetto | 1 | 1 | 1 | 1 | |
| 32 | 27 63 1 761 495 | | Lageraussenring / Bearing outer race / Bague extérieure de roulement / Yttering, lager / Anello esterno del cuscinetto | 1 | 1 | 1 | 1 | |
| 33 | 27 63 1 761 494 | | Paßscheibe / Spacer shim / Disque d'ajustement / Passbricka / Disco di aggiustaggio | 1 | 1 | 1 | 1 | |
| 34 | 07 11 9 913 908 | | 6 KT SHR M 12 × 40 | 1 | 1 | 1 | 1 | |

a) HBW-150 V – 1,8
b) HBW-150 V – 2,0
c) HBW-150 V – 3,0

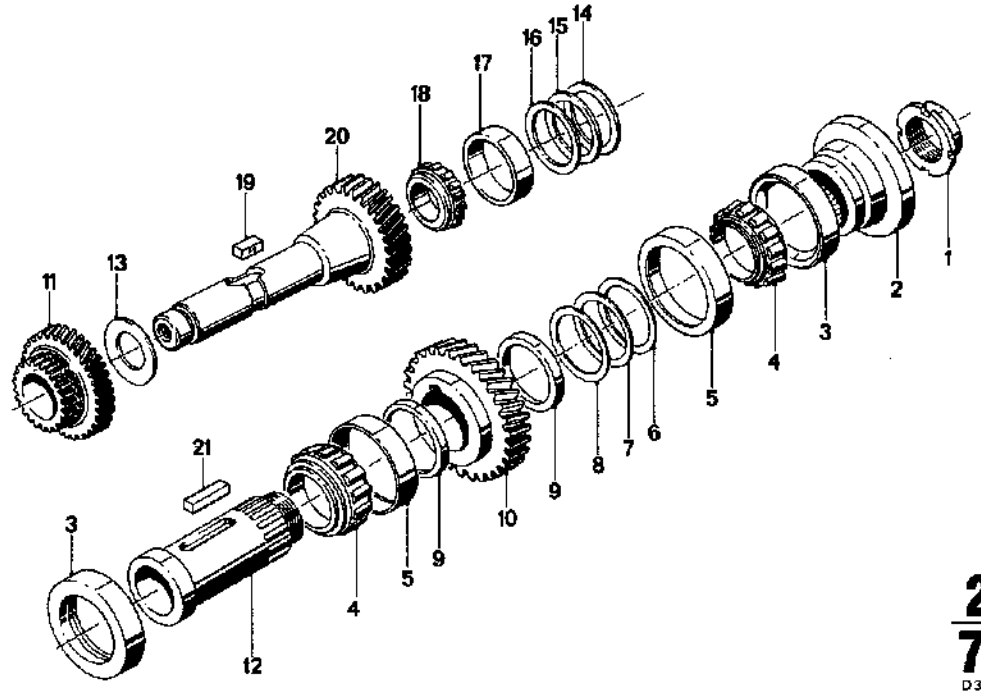


**27 / 7/1**
D 35/D 50
2/85

| 27 / 7/1 2/85 | | | | D 35 – 1 | D 35 – 2 | D 50 – 1 | D 50 – 2 | |
|---|---|---|---|---|---|---|---|---|
| Nr. | Teile-Nummer | Symbol | Benennung | | | | | Bemerkung |
| 1 | 27 63 1 761 504 | | Nutmutter / Grooved nut / Ecrou cannelé / Ringmutter med spår / Ghiera | 1 | 1 | 1 | 1 | |
| 2 | 27 63 1 761 503 | | Flansch / Flange / Bride / Fläns / Flangia | 1 | 1 | 1 | 1 | |
| 3 | 27 63 1 761 497 | | Radialwellendichtring / Radial shaft sealing ring Joint d'arbre / Radiell axeltätning / Anello di tenuta albero radiale | 2 | 2 | 2 | 2 | |
| 4 | 27 63 1 761 501 | | Kegelrollenlager / Tapered roller bearing / Roulement à rouleaux Koniskt rullager / Cusc. a rulli conici | 2 | 2 | 2 | 2 | |
| 5 | 27 63 1 761 502 | | dito | 2 | 2 | 2 | 2 | |
| 6 | 27 62 1 328 154 | | 0,2 Ausgleichsscheibe / Compensation shim Disque de compensation / Mellanlägg / Rondella di spessore | 2 | 2 | 2 | 2 | |
| 7 | 27 62 1 328 153 | | 0,15 dito | 2 | 2 | 2 | 2 | |
| 8 | 27 62 1 328 152 | | 0,1 dito | 2 | 2 | 2 | 2 | |
| 9 | 27 63 1 761 499 | | Distanzring / Spacer ring / Rondelle e'cartement / Distansbricka / Anello distanziatore | 2 | 2 | 2 | 2 | |
| 10 | 27 63 1 761 500 | | Z = 33 Tellerrad / Wheel / Train de roues / Hjul / Coppia conica | 1 | 1 | 1 | 1 | |
| 11 | 27 63 1 761 477 | | Z = 43 Zahnrad / Toothed wheel / Roue dentée / Kugghjul / Ruota dentata | 1 | 1 | 1 | 1 | |
| 12 | 27 63 1 761 498 | | Hohlwelle / Hollow shaft / Arbre creux / Hålaxel / Albero cavo | 1 | 1 | 1 | 1 | |
| 13 | 27 63 1 761 469 | | Scheibe / Washer / Rondelle / Bricka / Rondella | 2 | 2 | 2 | 2 | |
| 14 | 07 11 9 932 687 | | Paßscheibe / Spacer shim / Disque d'ajustement / Passbricka / Disco di aggiustaggio | 1 | 1 | 1 | 1 | |
| 15 | 07 11 9 932 686 | | dito | 1 | 1 | 1 | 1 | |
| 16 | 07 11 9 932 685 | | dito | 2 | 2 | 2 | 2 | |
| 17 | 27 62 1 328 408 | | Lageraussenring / Bearing outer race / Bague extérieure de roulement / Yttering, lager / Anello esterno del cuscinetto | 1 | 1 | 1 | 1 | |
| 18 | 27 62 1 328 409 | | Lagerinnenring / Bearing inner race / Bague intérieure de roulement / Innering, lager / Anello interno del cuscinetto | 1 | 1 | 1 | 1 | |
| 19 | 27 63 1 761 482 | | Paßfeder / Feather key / Ressort d'ajustage / Passkil / Chiavetta a molla d'adattam. | 2 | 2 | 2 | 2 | |

Getriebe – HBW-150 V
Gearbox – HBW-150 V
Boîte à vitesse – HBW-150 V
Växel – HBW-150 V
Gruppo propulsore – HBW-150 V

BMW D 35 / D 50

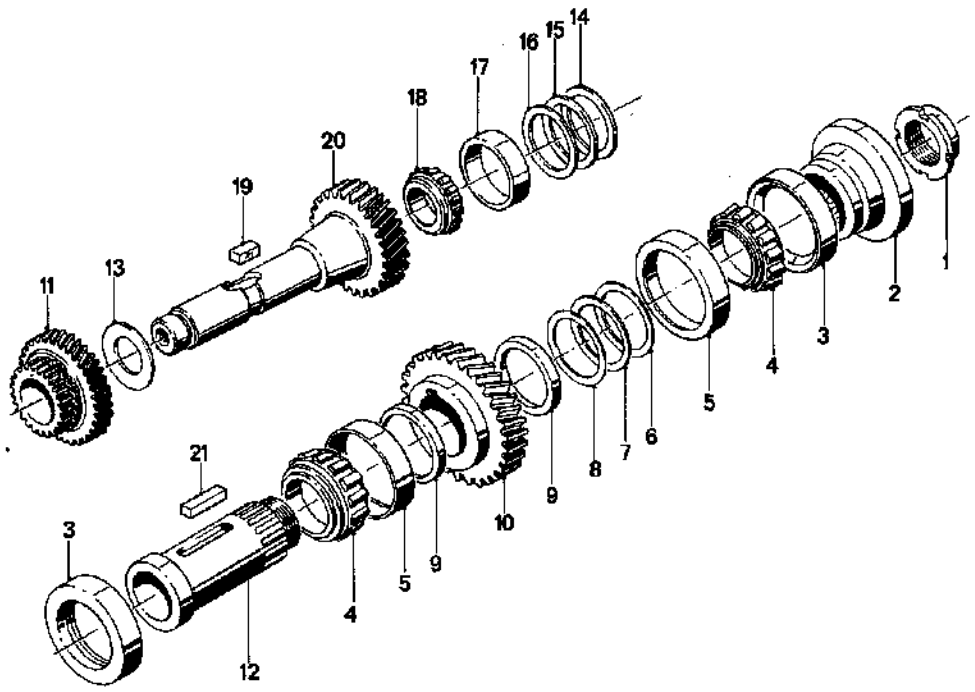


**27 / 7/2**
D 35/D 50
2/85

| 27 / 7/2 | 2/85 | | | D 35–1 | D 35–2 | D 50–1 | D 50–2 | Bemerkung |
|---|---|---|---|---|---|---|---|---|
| Nr. | Teile-Nummer | Symbol | Benennung | | | | | |
| 20 | 27 63 1 761 493 | | Z = 29 Kegelritzelwelle / Conical pinion shaft / Arbre à pignon conique / Axel med koniskt drev / Albero del pignone conico | 1 | 1 | 1 | 1 | |
| 21 | 07 11 9 951 078 | | Paßfeder / Feather key / Ressort d'ajustage / Passkil / Chiavetta a molla d'adattam. | 1 | 1 | 1 | 1 | |

Hurth-Getriebe – HBW-100/150/250
Hurth-Gearbox – HBW-100/150/250
Hurth-Boîte à vitesse – HBW-100/150/250
Hurth-Växel – HBW-100/150/250
Hurth-Gruppo propulsore – HBW-100/150/250



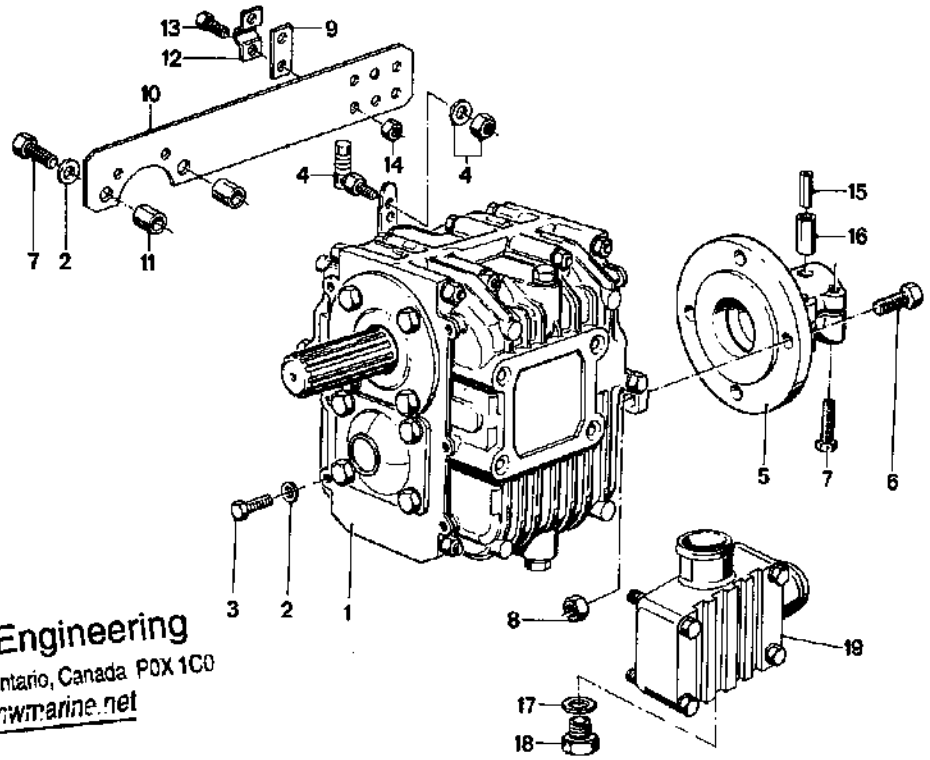


V12 Engineering
Box 50, Ontario, Canada P0X 1C0
www.bmwmarine.net



27 / 8/1 2/85

| Nr. | Teile-Nummer | Symbol | Benennung | D35–1 | D35–2 | D50–1 | D50–2 | Bemerkung |
|---|---|---|---|---|---|---|---|---|
| 1 | a 27 63 1 761 206 | | i = 1,5 kpl. Getriebe / Gearbox / Boîte à vitesse / Växel / Gruppo propulsore | 1 | 1 | 1 | 1 | |
| | a 27 63 1 761 205 | | i = 2,0 dito | 1 | 1 | 1 | 1 | |
| | b 27 63 1 333 811 | | i = 1,5 dito | 1 | 1 | 1 | 1 | |
| | b 27 63 1 333 812 | | i = 2,0 dito | 1 | 1 | 1 | 1 | |
| | b 27 63 1 333 813 | | i = 2,5 dito | 1 | 1 | 1 | 1 | |
| | c 27 63 1 761 068 | | i = 1,5 dito | 1 | 1 | 1 | 1 | |
| | c 27 63 1 761 069 | | i = 2,0 dito | 1 | 1 | 1 | 1 | |
| | c 27 63 1 761 070 | | i = 3,0 dito | 1 | 1 | 1 | 1 | |
| 2 | 07 11 9 931 067 | | A 8,4 Scheibe / Washer / Rondelle / Bricka / Rondella | 6 | 6 | 6 | 6 | |
| | c 07 11 9 932 112 | | B 10 Federscheibe / Spring washer / Rondelle élastique / Fjäderbricka / Rosetta elastico | 8 | 6 | 6 | 6 | |
| 3 | 07 11 9 913 662 | | 6 KT SHR M 8 × 30 | 6 | 6 | 6 | 6 | |
| | c 07 11 9 913 837 | | 6 KT SHR M 10 × 30 | 6 | 6 | 6 | 6 | |
| 4 | 13 21 1 333 285 | | Kugelgelenk / Globe joint / Joint à rotule / Kulled / Snodo sferico | 1 | 1 | 1 | 1 | |
| 5 | 27 63 1 333 368 | | Flansch / Flange / Bride / Fläns / Flangia | 1 | 1 | 1 | 1 | |
| 6 | 07 11 9 913 837 | | 6 KT SHR M 10 × 30 | 4 | 4 | 4 | 4 | |
| 7 | 07 11 9 913 676 | | 6 KT SHR M 8 × 35 | 6 | 6 | 6 | 6 | |
| 8 | 07 11 9 922 113 | | 6 KT MU M 10 | 4 | 4 | 4 | 4 | |
| 9 | 13 21 1 330 287 | | Distanzblech / Spacing plate / Tôle d'écartement / Distansbleck / Lamiera distanziatore | 1 | 1 | 1 | 1 | |
| 10 | 27 63 1 333 793 | | Halteblech / Retaining plate / Tôle de retenue / Fästplåt / Lamiera distostegno | 1 | 1 | 1 | 1 | |
| 11 | 27 63 1 761 106 | | Distanzstück / Spacer / Pièce d'écartement / Distansstycke / Pezzo distanziatore | 2 | 2 | 2 | 2 | |
| 12 | 13 21 1 326 574 | | Klemmbügel / Clamp strap / Etrier de serrage / Klämbygel / Staffa di serraggio | 1 | 1 | 1 | 1 | |

a) HBW-100
b) HBW-150
c) HBW-250

d) nur erforderlich bei linkslaufendem Propeller: / only necessary for anticlockwise rotating propeller / nécessaire uniquement pour l'hélice tournant à gauche / bevös bara för propeller med vänstergång / necessario solo per elica a rotazione sinistra
HBW 100 – D50, D50-2 / HBW 150 – D50, D50-2 / HBW 150V – D35, D35-2 / HBW 250 – D35, D35-2, D50, D50-2

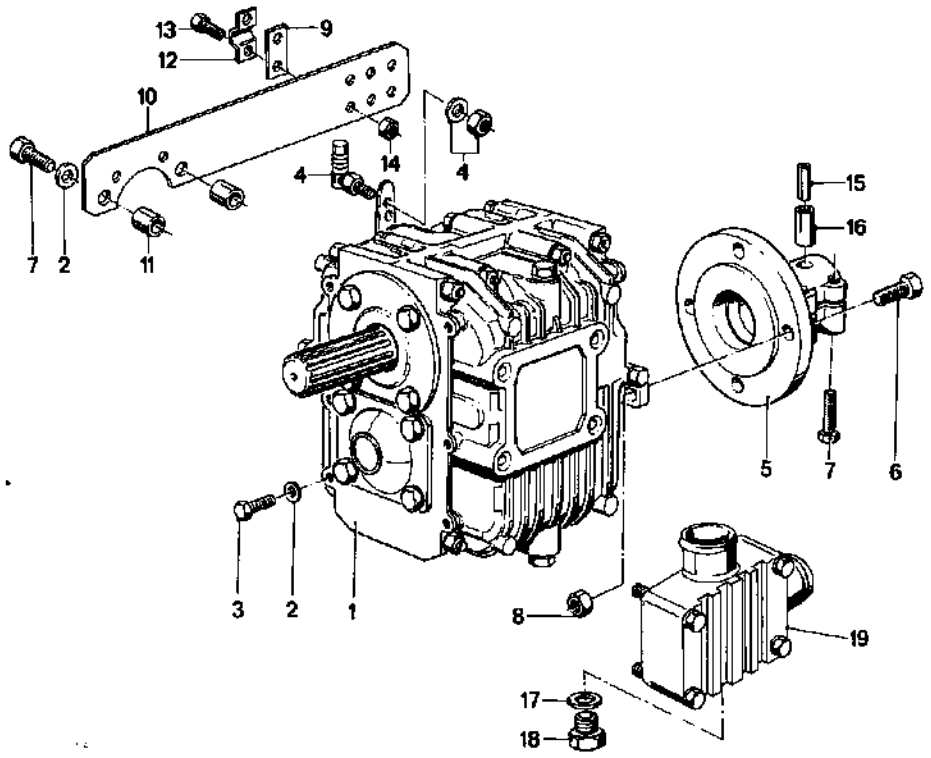


**27 / 8/2**
D 35/ D 50
2/85

**27 / 8/2** 2/85

| Nr. | Teile-Nummer | Symbol | Benennung | D 35–1 | D 35–2 | D 50–1 | D 50–2 | Bemerkung |
|---|---|---|---|---|---|---|---|---|
| 13 | 07 11 9 913 241 | | 6 KT SHR M 5 x 16 | 2 | 2 | 2 | 2 | |
| 14 | 07 12 9 922 410 | | 6 KT MU M 5 | 2 | 2 | 2 | 2 | |
| 15 | 07 11 9 941 341 | | 5 x 50 Spannstift / Spring dowel sleeve / Goupille de serrage / Spännstift / Perno tenditore di fissaggio | 1 | 1 | 1 | 1 | |
| 16 | 07 11 9 941 345 | | 8 x 50 dito | 1 | 1 | 1 | 1 | |
| 17 | d 07 11 9 963 252 | | DTRG | 1 | 1 | 1 | 1 | |
| 18 | d 07 11 9 919 171 | | VSL SHR | 1 | 1 | 1 | 1 | |
| 19 | d 27 83 1 761 857 | | kpl. Kühlerdeckel / Radiator cover / Couvercle de radiateur / Kylarlock / Tappo radiatore | 1 | 1 | 1 | 1 | |

a) HBW-100
b) HBW-150
c) HBW-250

d) nur erforderlich bei linkslaufendem Propeller: / only necessary for anticlockwise rotating propeller / nécessaire uniquement pour l'hélice tournant à gauche / bevös bara för propeller med vänstergång / necessario solo per elica a rotazione sinistra

HBW 100 – D50, D50-2 / HBW 150 – D50, D50-2 / HBW 150V – D35, D35-2 / HBW 250 – D35, D35-2, D50, D50-2

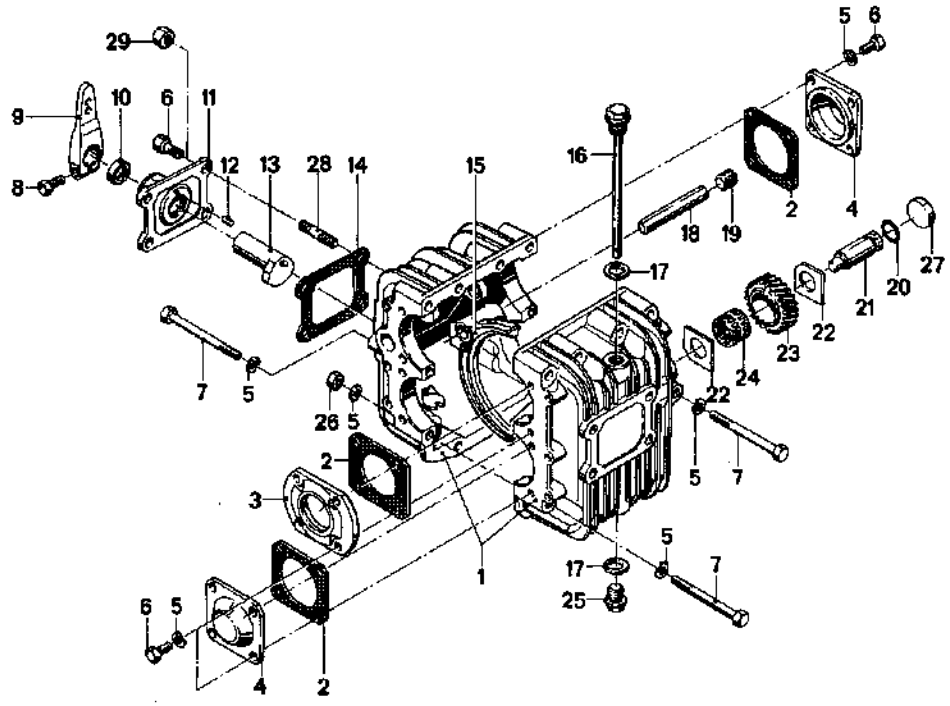


**27/9/1**
D35/D50
2/85

| 27/9/1 2/85 | | | | | | | | | |
|---|---|---|---|---|---|---|---|---|---|
| Nr. | Teile-Nummer | Symbol | Benennung | D35–1 | D35–2 | D50–1 | D50–2 | | Bemerkung |
| 1 | a 27 63 1 331 275 | | Gehäuse / Housing / Boîte / Hus / Scatola | 1 | 1 | 1 | 1 | | |
| | b 27 63 1 761 452 | | dito | 1 | 1 | 1 | 1 | | |
| | c 27 63 1 761 481 | | dito | 1 | 1 | 1 | 1 | | |
| 2 | a 27 63 1 331 306 | | Dichtung / Seal / Garniture / Packning / Guarnizione | 4 | 4 | 4 | 4 | | |
| | b 27 63 1 761 468 | | dito | 4 | 4 | 4 | 4 | | |
| | c 27 63 1 761 532 | | dito | 4 | 4 | 4 | 4 | | |
| 3 | a 27 63 1 331 451 | | Deckel / Cover / Couvercle / Lock / Coperchio | 1 | 1 | 1 | 1 | | |
| | b 27 63 1 761 462 | | dito | 1 | 1 | 1 | 1 | | |
| | c 27 63 1 761 523 | | dito | 1 | 1 | 1 | 1 | | |
| 4 | a 27 63 1 331 299 | | dito | 2 | 2 | 2 | 2 | | |
| | b 27 63 1 761 467 | | dito | 2 | 2 | 2 | 2 | | |
| | c 27 63 1 761 527 | | dito | 2 | 2 | 2 | 2 | | |
| 5 | 07 11 9 932 095 | | B8 Federscheibe / Spring washer / Rondelle élastique / Fjäderbricka / Rosetta elastico | 40 | 40 | 40 | 40 | | |
| 6 | 07 11 9 913 624 | WW | 6 KT SHR M 8 × 16 | 16 | 16 | 16 | 16 | | |
| 7 | 07 11 9 912 567 | | 6 KT SHR M 8 × 90 | 10 | 10 | 10 | 10 | | 14 Stck. – HBW 150 |
| | c 07 11 9 912 578 | | 6 KT SHR M 8 × 110 | 14 | 14 | 14 | 14 | | |
| 8 | 07 11 9 913 644 | | 6 KT SHR M 8 × 20 | 1 | 1 | 1 | 1 | | |
| 9 | 27 63 1 331 264 | | Schalthebel / Gear shift lever / Levier de commande / Växelspak / Leva di comando | 1 | 1 | 1 | 1 | | |
| 10 | 27 63 1 331 270 | | DT RG | 1 | 1 | 1 | 1 | | |
| 11 | 27 63 1 331 265 | | Schaltdeckel / Gear shift cover / Couvercle de commande / Växelhuslock / | 1 | 1 | 1 | 1 | | |
| 12 | 07 11 9 941 385 | | Spannstift / Spring dowel sleeve / Goupille de serrage / Spännstift / Perno tenditore di fissaggio | 1 | 1 | 1 | 1 | | |
| 13 | 27 63 1 331 266 | | Schaltnocke / Shifting cam / Came de commande / Växelkam / Camma di comando | 1 | 1 | 1 | 1 | | |
| 14 | 27 63 1 331 271 | | Dichtung / Seal / Garniture / Packning / Guarnizione | 1 | 1 | 1 | 1 | | |

a) HBW-100
b) HBW-150
c) HBW-250

Hurth-Getriebe, Gehäuse – HBW-100/150/250
Hurth-Gearbox, Housing – HBW-100/150/250
Hurth-Boîte à vitesse, Boîte – HBW-100/150/250
Hurth-Växel, Hus – HBW-100/150/250
Hurth-Gruppo propulsore, Scatola – HBW-100/150/250

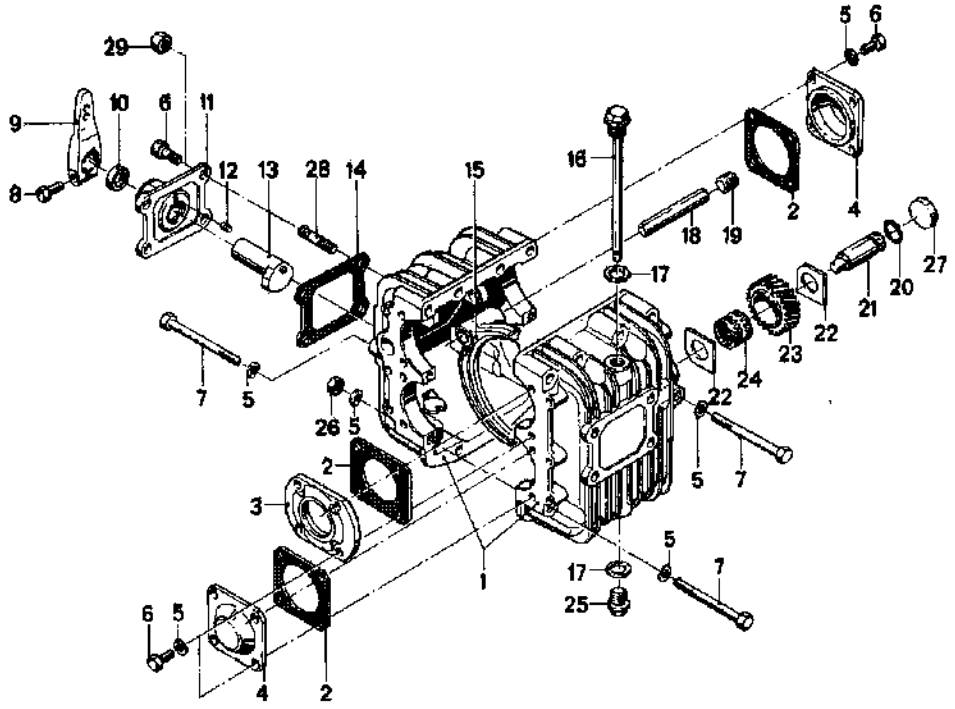


**27**
**9/2**
D35/D50
2/85

**27 9/2** 2/85

| Nr. | Teile-Nummer | Symbol | Benennung | D35–1 | D35–2 | D50–1 | D50–2 | Bemerkung |
|---|---|---|---|---|---|---|---|---|
| 15 | a 27 63 1 761 428 | | Schaltgabel / Shift fork / Fourchette de changement de vitesse / Växelförare / Forcella | 1 | 1 | 1 | 1 | |
| | b 27 63 1 761 453 | | dito | 1 | 1 | 1 | 1 | |
| | c 27 63 1 761 507 | | dito | 1 | 1 | 1 | 1 | |
| 16 | a 27 63 1 331 295 | | Ölmeßstab / Dipstick / Jauge d'huile / Oljemätsticka / Asta controllo livello olio | 1 | 1 | 1 | 1 | |
| | b 27 63 1 761 466 | | dito | 1 | 1 | 1 | 1 | |
| | c 27 63 1 761 526 | | dito | 1 | 1 | 1 | 1 | |
| 17 | 27 63 1 761 423 | | DT RG | 2 | 2 | 2 | 2 | |
| 18 | 27 63 1 331 273 | | Schaltstange / Shift rod / Arbre de commande des vitesses / Växelföraraxel / Asta d. comando | 1 | 1 | 1 | 1 | |
| | c 27 63 1 761 489 | | dito | 1 | 1 | 1 | 1 | |
| 19 | 07 11 9 919 018 | | VSL SHR M 16 × 1,5 | 1 | 1 | 1 | 1 | |
| 20 | a 27 63 1 331 283 | | O-Ring / O-ring / Joint torique / O-ring / Anello-O | 1 | 1 | 1 | 1 | |
| | b 27 63 1 761 456 | | dito | 1 | 1 | 1 | 1 | |
| 21 | a 27 63 1 331 281 | | Zwischenradwelle / Intermediate gear shaft / Arbre de roue dentée intermédiaire / Mellanhjulsaxel / Albero ruota intermedia | 1 | 1 | 1 | 1 | |
| | b 27 63 1 761 454 | | dito | 1 | 1 | 1 | 1 | |
| | c 27 63 1 761 508 | | dito | 1 | 1 | 1 | 1 | |
| 22 | a 27 63 1 331 282 | | Anlaufscheibe / Thrust washer / Rondelle d'entraînement / Passbricka / Rosetta di arresto | 2 | 2 | 2 | 2 | |
| | b 27 63 1 761 455 | | dito | 2 | 2 | 2 | 2 | |
| | c 27 63 1 761 491 | | dito | 2 | 2 | 2 | 2 | |
| 23 | a 27 63 1 331 274 | | Z = 26 Zwischenrad / Intermediate gear / Roue intermédiaire / Mellanhjul / Ruota intermedia | 1 | 1 | 1 | 1 | |
| | b 27 63 1 761 451 | | Z = 26 dito | 1 | 1 | 1 | 1 | |
| | c 27 63 1 761 505 | | Z = 26 dito | 1 | 1 | 1 | 1 | |
| 24 | a 27 63 1 331 284 | | Doppelkammkäfig / Roller bearing / Cage à double rangeè de rouleaux / Dubbelkambur / Cuscinetto a doppio collare | 1 | 1 | 1 | 1 | |
| | b 27 63 1 761 457 | | dito | 1 | 1 | 1 | 1 | |
| | c 27 63 1 761 509 | | dito | | | | | |

a) HBW-100
b) HBW-150
c) HBW-250

# Hurth-Getriebe, Gehäuse – HBW-100/150/250
# Hurth-Gearbox, Housing – HBW-100/150/250
# Hurth-Boîte à vitesse, Boîte – HBW-100/150/250
# Hurth-Växel, Hus – HBW-100/150/250
# Hurth-Gruppo propulsore, Scatola – HBW-100/150/250

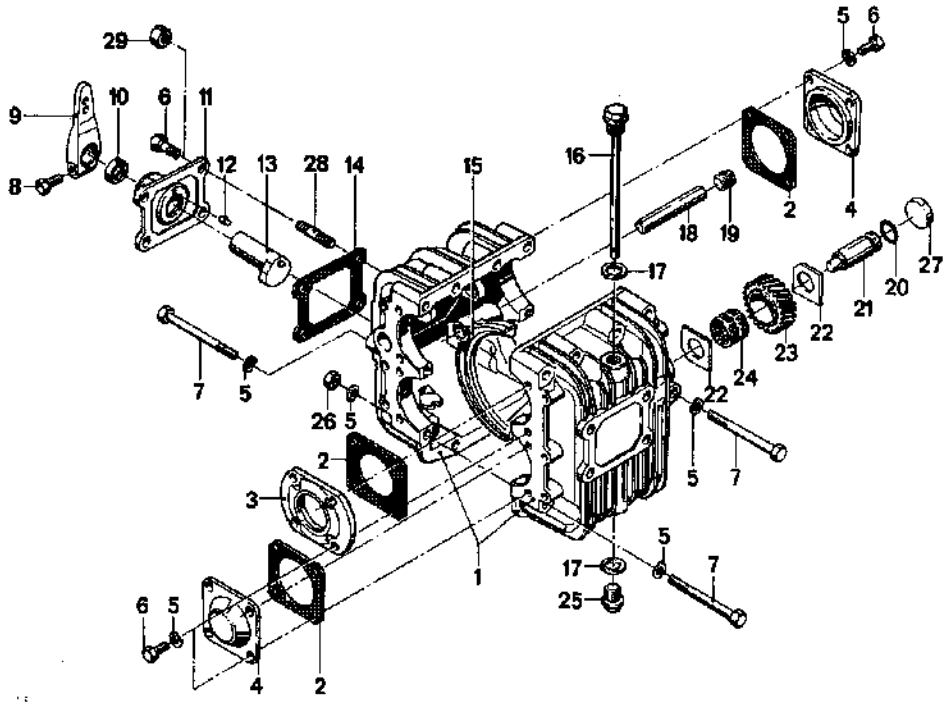


**27**
**9/3**
D 35/D 50
2/85

**27 9/3** 2/85

| Nr. | Teile-Nummer | Symbol | Benennung | D 35 – 1 | D 35 – 2 | D 50 – 1 | D 50 – 2 | Bemerkung |
|---|---|---|---|---|---|---|---|---|
| 25 | 27 63 1 331 262 | | VSLSHR | 1 | 1 | 1 | 1 | |
| 26 | 07 11 9 922 067 | | 6 KT MU M 8 | 12 | 12 | 12 | 12 | 14 Stck. – HBW 150/250 |
| 27 | c 07 11 9 937 305 | | Verschlußdeckel / Blanking cover / Couvercle d'obturation / Täckblock / Coperchio di chiusura | 1 | 1 | 1 | 1 | |
| 28 | 07 11 9 909 080 | WW | STI SHR M 8 × 25 | 4 | 4 | 4 | 4 | |
| 29 | 07 11 9 922 067 | WW | 6 KT MU M 8 | 4 | 4 | 4 | 4 | |

a) HBW-100
b) HBW-150
c) HBW-250

# Hurth-Getriebe, Gehäuse – HBW-100/150/250
# Hurth-Gearbox, Housing – HBW-100/150/250
# Hurth-Boîte à vitesse, Boîte – HBW-100/150/250
# Hurth-Växel, Hus – HBW-100/150/250
# Hurth-Gruppo propulsore, Scatola – HBW-100/150/250

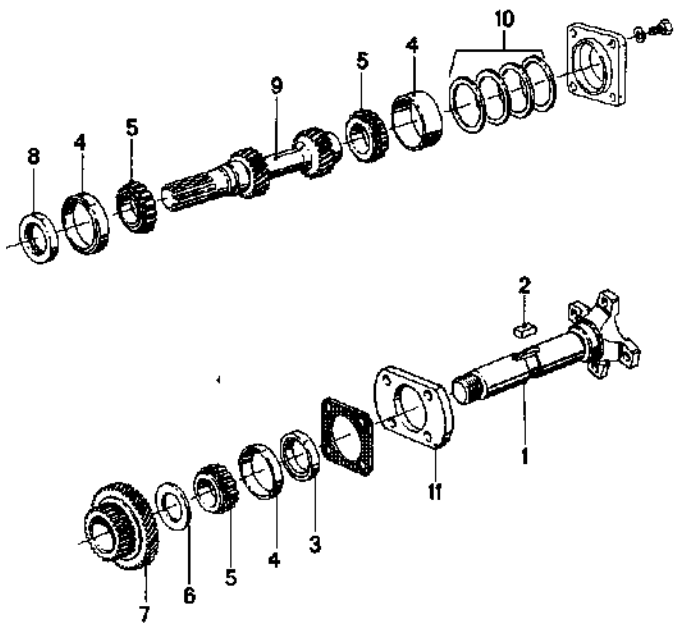


**27 / 10/1**
D 35/D 50
2/85

**27 / 10/1** 2/85

| Nr. | Teile-Nummer | Symbol | Benennung | D 35–1 | D 35–2 | D 50–1 | D 50–2 | Bemerkung |
|---|---|---|---|---|---|---|---|---|
| 1 | a 27 63 1 331 308 | | Abtriebswelle / Output shaft / Arbre de sortee / Avdriftsaxel / Albero di trasmissione | 1 | 1 | 1 | 1 | |
| | b 27 63 1 761 470 | | dito | 1 | 1 | 1 | 1 | |
| | c 27 63 1 761 534 | | dito | 1 | 1 | 1 | 1 | |
| 2 | a 07 11 9 951 074 | | Paßfeder / Key / Clavette paralléle / Passkil / Chiavetta a molla d'adattam. | 2 | 2 | 2 | 2 | |
| | b 27 63 1 761 482 | | dito | 2 | 2 | 2 | 2 | |
| | c 27 63 1 761 542 | | dito | 2 | 2 | 2 | 2 | |
| 3 | a 27 63 1 331 297 | | DT RG | 1 | 1 | 1 | 1 | |
| | b 27 63 1 761 465 | | dito | 1 | 1 | 1 | 1 | |
| | c 27 63 1 761 525 | | dito | 1 | 1 | 1 | 1 | |
| 4 | a 27 63 1 331 327 | | Lageraussenring / Bearing outer race / Bague extérieure de roulement / Yttering, lager / Anello esterno del cuscinetto | 4 | 4 | 4 | 4 | |
| | b 27 62 1 328 390 | | dito | 4 | 4 | 4 | 4 | |
| | c 27 63 1 761 540 | | dito | 4 | 4 | 4 | 4 | |
| 5 | a 27 63 1 331 328 | | Lagerinnenring / Bearing inner race / Bague intérieure de roulement / Innering, lager / Anello interno del cuscinetto | 4 | | 4 | | |
| | b 27 62 1 328 389 | | dito | 4 | 4 | 4 | 4 | |
| | c 27 63 1 761 541 | | dito | 4 | 4 | 4 | 4 | |
| 6 | 27 63 1 331 307 | | Scheibe / Flat washer / Rondelle / Bricka / Rondella | 2 | 2 | 2 | 2 | |
| 7 | a 27 63 1 331 324 | | Z = 41 Zahnrad / Toothed wheel / Roue dentée / Kugghjul / Ruota dentata | 1 | 1 | 1 | 1 | |
| | b 27 63 1 761 477 | | Z = 43 dito | 1 | 1 | 1 | 1 | |
| | c 27 63 1 761 548 | | Z = 44 dito | 1 | 1 | 1 | 1 | |
| 8 | 27 63 1 331 298 | | DT RG | 1 | 1 | 1 | 1 | |
| | c 27 63 1 761 463 | | dito | 1 | 1 | 1 | 1 | |

a) HBW-100
b) HBW-150
c) HBW-250

Hurth-Getriebe, Gehäuse – HBW-100/150/250
Hurth-Gearbox, Housing – HBW-100/150/250
Hurth-Boîte à vitesse, Boîte – HBW-100/150/250
Hurth-Växel, Hus – HBW-100/150/250
Hurth-Gruppo propulsore, Scatola – HBW-100/150/250



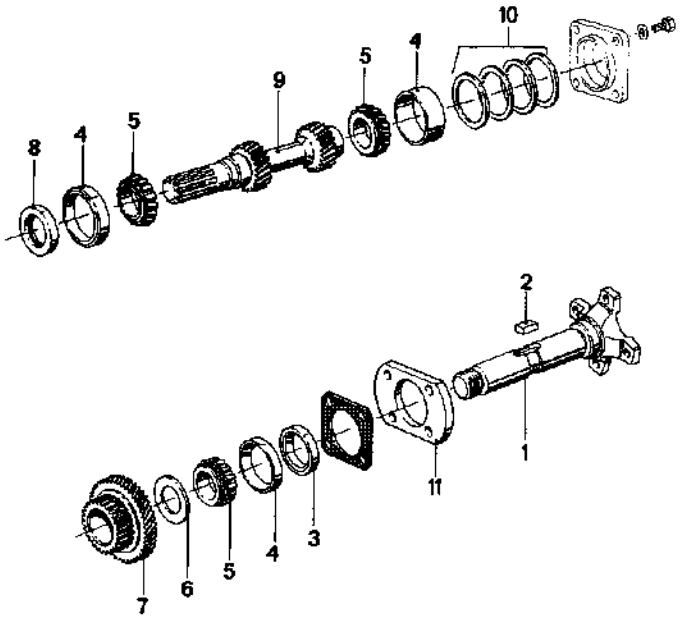


**27 / 10/2**
D 35/D 50
2/85

**27 / 10/2** 2/85

| Nr. | Teile-Nummer | Symbol | Benennung | D35–1 | D35–2 | D50–1 | D50–2 | Bemerkung |
|---|---|---|---|---|---|---|---|---|
| 9 | a 27 63 1 761 448 | | Z = 27/22 Antriebswelle / Drive shaft / Arbre de commande / Motoraxel / Albero primario | 1 | 1 | 1 | 1 | HBW-100 – 1,5 R |
| | a 27 63 1 761 447 | | Z = 24/22 dito | 1 | 1 | 1 | 1 | HBW-100 – 2,0 R |
| | b 27 63 1 761 487 | | Z = 27/22 dito | 1 | 1 | 1 | 1 | HBW-150 – 1,5 R |
| | b 27 63 1 761 485 | | Z = 24/22 dito | 1 | 1 | 1 | 1 | HBW-150 – 2,0 R |
| | b 27 63 1 761 483 | | Z = 19/22 dito | 1 | 1 | 1 | 1 | HBW-250 – 2,5 R |
| | c 27 63 1 761 549 | | Z = 28/21 dito | 1 | 1 | 1 | 1 | HBW-250 – 1,5 R |
| | c 27 63 1 761 546 | | Z = 25/21 dito | 1 | 1 | 1 | 1 | HBW-250 – 2,0 R |
| | c 27 63 1 761 543 | | Z = 19/18 dito | 1 | 1 | 1 | 1 | HBW-250 – 3,0 R |
| 10 | 27 63 1 331 300 | | 0,1 Ausgleichsscheiben / Compensation shim / Disque de compensation / Mellanlägg / Rondella di spessore | 2 | 2 | 2 | 2 | |
| | 27 63 1 331 301 | | 0,15 dito | 2 | 2 | 2 | 2 | |
| | 27 63 1 331 302 | | 0,2 dito | 2 | 2 | 2 | 2 | |
| | 27 63 1 331 303 | | 0,3 dito | 2 | 2 | 2 | 2 | |
| | 27 63 1 331 304 | | 0,5 dito | 2 | 2 | 2 | 2 | |
| | 27 63 1 331 305 | | 1,0 dito | 2 | 2 | 2 | 2 | |
| 11 | a 27 63 1 331 294 | | Deckel / Cover / Couvercle / Lock / Coperchio | 1 | 1 | 1 | 1 | |
| | b 27 63 1 761 482 | | dito | 1 | 1 | 1 | 1 | |
| | c 27 63 1 761 523 | | dito | 1 | 1 | 1 | 1 | |

a) HBW-100
b) HBW-150
c) HBW-250

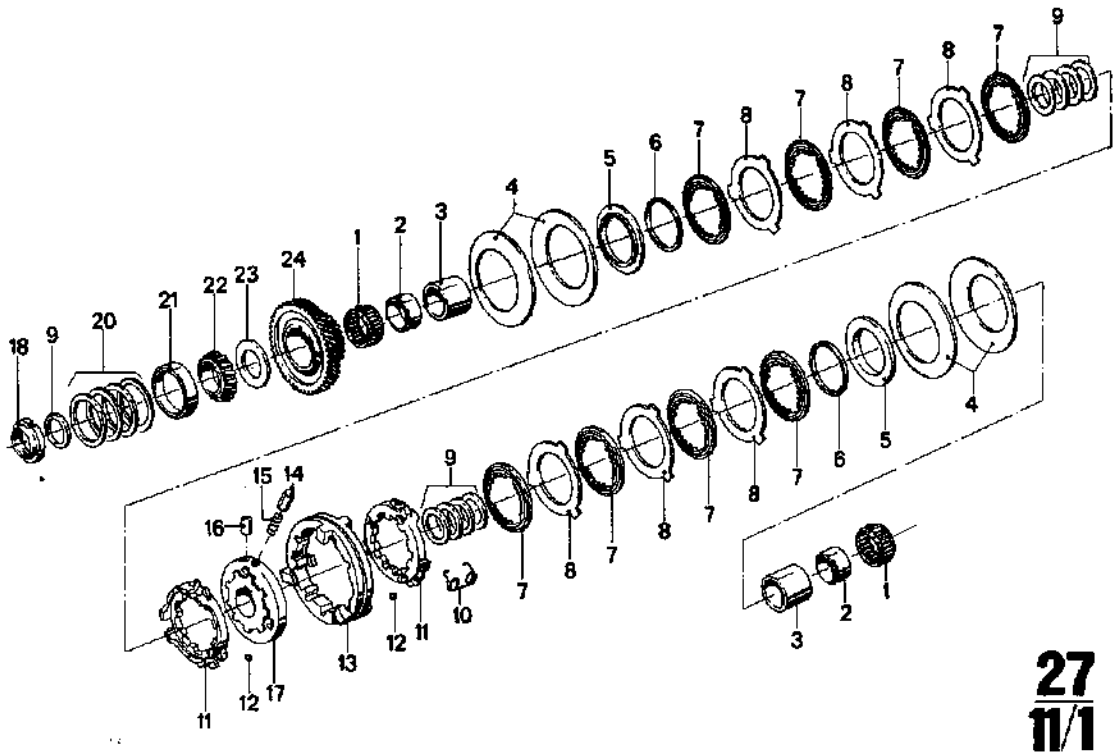

**27 11/1**
D 35/D 50
2/85

**27 11/1** 2/85

| Nr. | Teile-Nummer | Symbol | Benennung | D 35–1 | D 35–2 | D 50–1 | D 50–2 | Bemerkung |
|---|---|---|---|---|---|---|---|---|
| 1 | a 27 63 1 331 326 | | Nadelkäfig / Needle cage / Cage de palier à aiguilles / Nalbur / Gabbia ad aghi | 2 | 2 | 2 | 2 | |
| | 27 63 1 761 479 | | dito | 1 | 1 | 1 | 1 | |
| 2 | a 27 63 1 331 315 | | Nadellagerring / Needle bearing ring / Bague de roulement à aiguilles / Nållagerring / Anello cuscinetto ad aghi | 2 | 2 | 2 | 2 | |
| | 27 63 1 761 475 | | dito | 1 | 1 | 1 | 1 | |
| 3 | a 27 63 1 331 312 | | Abstandsring / Spacer ring / Anneau d'ecartement / Distansring / Anello diszanziat. | 2 | 2 | 2 | 2 | |
| | b 27 63 1 761 472 | | dito | 2 | 2 | 2 | 2 | |
| | c 27 63 1 761 536 | | dito | 1 | 1 | 1 | 1 | |
| 4 | a 27 63 1 331 321 | | Tellerfeder / Belle ville spring washer / Ressort belle ville / Tallriskfjäder / Molla di disco | 4 | 4 | 4 | 4 | |
| | b 27 63 1 761 476 | | dito | 2 | 2 | 2 | 2 | |
| | c 27 63 1 761 539 | | dito | 2 | 2 | 2 | 2 | |
| 5 | a 27 63 1 331 311 | | Druckscheibe / Thrust washer / Rondelle de pression / Tryckskiva / Rosetta di pressione | 2 | 2 | 2 | 2 | |
| | b 27 63 1 761 471 | | dito | 2 | 2 | 2 | 2 | |
| | c 27 63 1 761 535 | | dito | 1 | 1 | 1 | 1 | |
| 6 | 27 63 1 331 325 | | Sprengring / Expansion ring / Anneau d'expansion / Låsring / Anello elastico | 2 | 2 | 2 | 2 | |
| | b 27 63 1 761 478 | | dito | 1 | 1 | 1 | 1 | |
| | c 27 63 1 328 387 | | dito | 1 | 1 | 1 | 1 | |
| 7 | a 27 63 1 331 313 | | Innenlamelle / Inner disk / Disque intérieur / Inre lamell / Lamella interno | 8 | 8 | 8 | 8 | |
| | b 27 63 1 761 473 | | dito | 8 | 8 | 8 | 8 | |
| | c 27 63 1 761 537 | | dito | 5 | 5 | 5 | 5 | |
| 8 | a 27 63 1 331 314 | | Außenlamelle / Outer disk / Disque extérieur / Yttre lamell / Lamella esterna | 6 | 6 | 6 | 6 | |
| | b 27 63 1 761 474 | | dito | 3 | 3 | 3 | 3 | |
| | c 27 62 1 328 179 | | dito | 4 | 4 | 4 | 4 | |

a) HBW-100
b) HBW-150
c) HBW-250

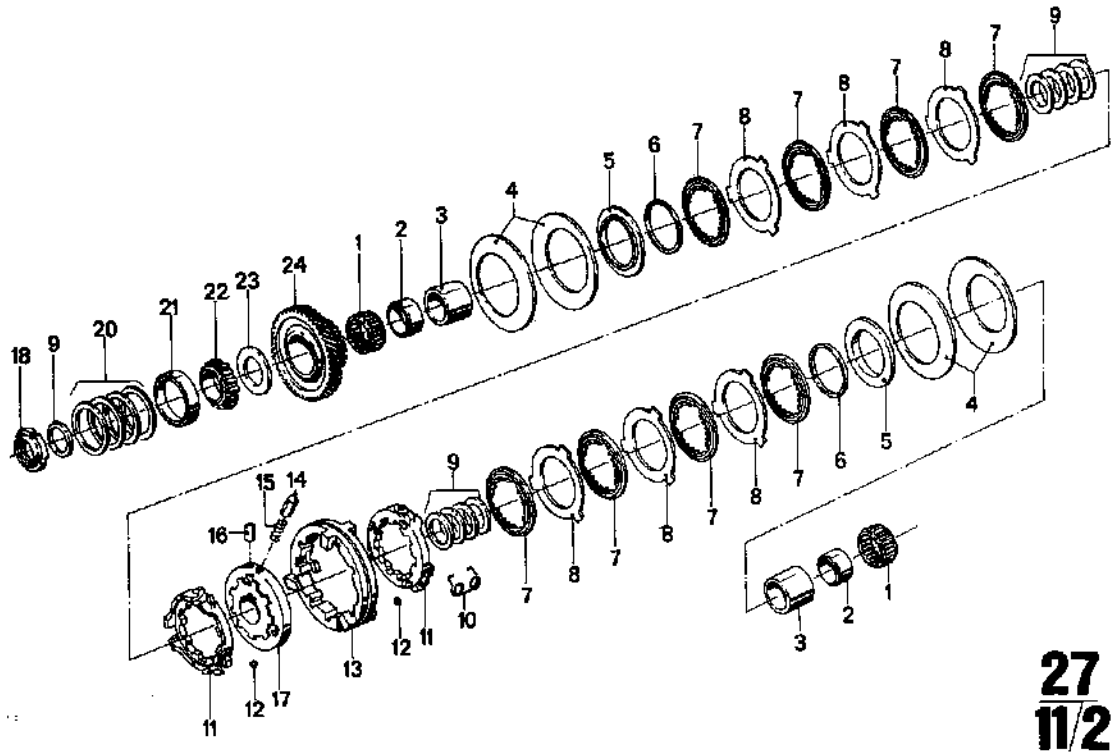


**27 11/2** 2/85

| Nr. | Teile-Nummer | Symbol | Benennung | D35–1 | D35–2 | D50–1 | D50–2 | Bemerkung |
|---|---|---|---|---|---|---|---|---|
| 9 | a 27 63 1 331 316 | | 0,4 Ausgleichsscheiben / Compensation shim / Disque de compensation / Mellanlägg / Rondella di spessore | 2 | 2 | 2 | 2 | |
| | a 27 63 1 331 317 | | 0,5 dito | 2 | 2 | 2 | 2 | |
| | a 27 63 1 331 318 | | 0,6 dito | 2 | 2 | 2 | 2 | |
| | a 27 63 1 331 319 | | 0,7 dito | 2 | 2 | 2 | 2 | |
| | 27 62 1 328 174 | | 0,4 dito | 1 | 1 | 1 | 1 | |
| | 27 62 1 328 175 | | 0,5 dito | 1 | 1 | 1 | 1 | |
| | 27 62 1 328 176 | | 0,6 dito | 1 | 1 | 1 | 1 | |
| | 27 62 1 328 177 | | 0,7 dito | 1 | 1 | 1 | 1 | |
| 10 | a 27 62 1 328 204 | | Drehfeder / Torsion spring / Barre de torsion / Dragfjäder / Molla girevole | 3 | 3 | 3 | 3 | |
| 11 | a 27 63 1 331 288 | | Lamellenträger / Disk carrier / Support de disque / Lamellhållare / Portalamella | 2 | 2 | 2 | 2 | |
| | b 27 63 1 761 458 | | dito | 2 | 2 | 2 | 2 | |
| | c 27 62 1 328 208 | | dito | 2 | 2 | 2 | 2 | |
| 12 | a 07 11 9 986 274 | | 7,5 Kugel / Ball / Bille / Kul / Sfera | 6 | 6 | 6 | 6 | |
| | b 07 11 9 986 280 | | 8,0 dito | 6 | 6 | 6 | 6 | |
| | c 07 11 9 986 298 | | 9,0 dito | 6 | 6 | 6 | 6 | |
| 13 | a 27 63 1 331 289 | | Schaltmuffe / Gear shift sleeve / Douille de commande / Kopplingsmuff / Manicotto di comando | 1 | 1 | 1 | 1 | |
| | b 27 63 1 761 459 | | dito | 1 | 1 | 1 | 1 | |
| | c 27 63 1 761 520 | | dito | 1 | 1 | 1 | 1 | |
| 14 | a 27 63 1 331 291 | | Arretierstift / Retaining pin / Cheville d'arrêt / Låspinne / Bullone d'arresto | 3 | 3 | 3 | 3 | |
| | 27 62 1 328 202 | | dito | 3 | 3 | 3 | 3 | |
| 15 | a 27 62 1 330 208 | | Druckfeder / Compression spring / Ressort à pression / Tryckfjäder / Molla di compressione | 3 | 3 | 3 | 3 | |
| | 27 62 1 328 162 | | dito | 3 | 3 | 3 | 3 | |

a) HBW-100
b) HBW-150
c) HBW-250

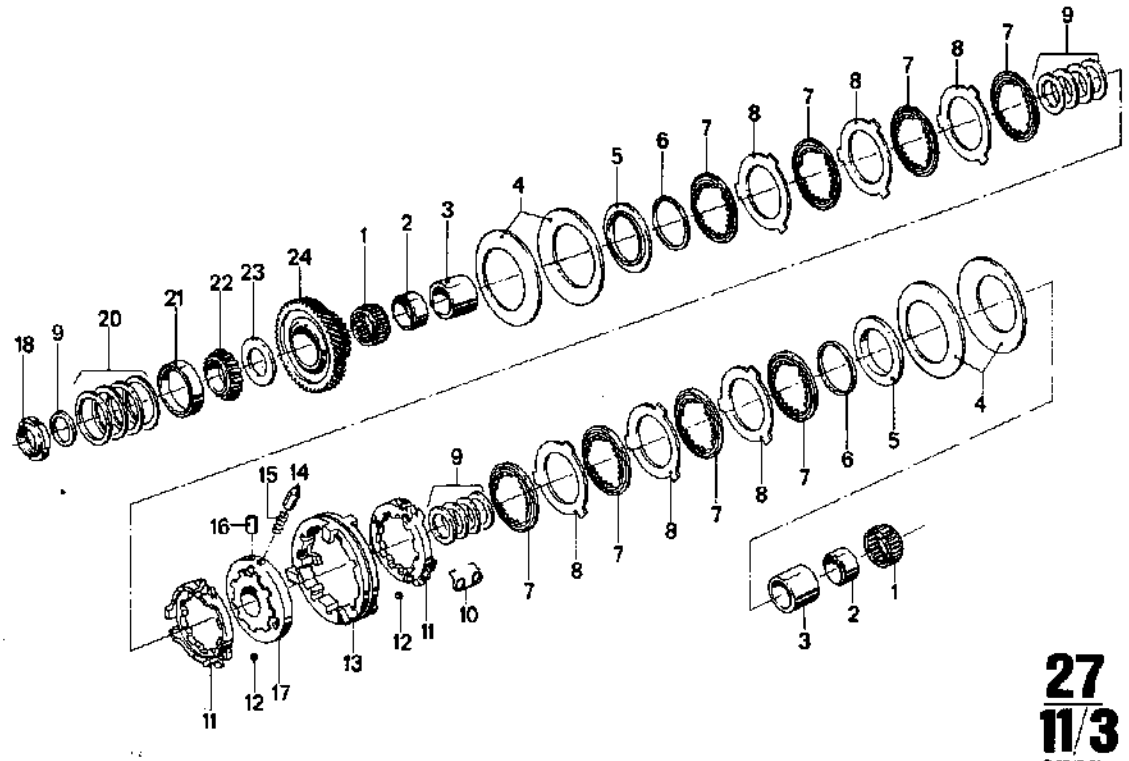


**27 / 11/3**
D35/D50
2/85

**27 / 11/3** 2/85

| Nr. | Teile-Nummer | Symbol | Benennung | D35–1 | D35–2 | D50–1 | D50–2 | Bemerkung |
|---|---|---|---|---|---|---|---|---|
| 16 | a 27 63 1 331 292 | | Mitnehmerstift / Driving pin / Broche d'entrainement / Medbringarstift / Perno di trascinamento | 3 | 3 | 3 | 3 | |
| | 27 62 1 328 203 | | dito | 3 | 3 | 3 | 3 | |
| 17 | a 27 63 1 331 290 | | Führungsmuffe / Guide sleeve / Douille de guidage / Sturmuff / Manicotto d. guida | 1 | 1 | 1 | 1 | |
| | b 27 63 1 761 460 | | dito | 1 | 1 | 1 | 1 | |
| | c 27 63 1 761 521 | | dito | 1 | 1 | 1 | 1 | |
| 18 | a 27 63 1 331 309 | | Nutmutter / Grooved nut / Ecrou cannelé / Ringmutter med spår / Ghiera | 1 | 1 | 1 | 1 | |
| | 27 62 1 328 173 | | dito | 1 | 1 | 1 | 1 | |
| 19 | a 27 63 1 331 310 | | Distanzring / Spacer ring / Anneau d'ecartement / Distansring / Anello distanziatore | 1 | 1 | 1 | 1 | |
| | 27 62 1 328 385 | | dito | 1 | 1 | 1 | 1 | |
| 20 | a 27 63 1 331 300 | | 0,1 Ausgleichsscheibe / Compensation shim / Disque de compensation / Mellanlägg / Rondella di spessore | 2 | 2 | 2 | 2 | |
| | a 27 63 1 331 301 | | 0,15 dito | 2 | 2 | 2 | 2 | |
| | a 27 63 1 331 303 | | 0,3 dito | 2 | 2 | 2 | 2 | |
| | a 27 63 1 331 304 | | 0,5 dito | 2 | 2 | 2 | 2 | |
| | b 27 62 1 328 147 | | 0,1 dito | 2 | 2 | 2 | 2 | |
| | b 27 62 1 328 149 | | 0,2 dito | 2 | 2 | 2 | 2 | |
| | b 27 62 1 328 151 | | 0,5 dito | 2 | 2 | 2 | 2 | |
| | b 27 62 1 328 150 | | 1,0 dito | 2 | 2 | 2 | 2 | |
| | c 27 63 1 761 528 | | 0,1 dito | 2 | 2 | 2 | 2 | |
| | c 27 63 1 761 529 | | 0,2 dito | 2 | 2 | 2 | 2 | |
| | c 27 63 1 761 530 | | 0,5 dito | 2 | 2 | 2 | 2 | |
| | c 27 63 1 761 531 | | 1,0 dito | 2 | 2 | 2 | 2 | |

a) HBW-100
b) HBW-150
c) HBW-250

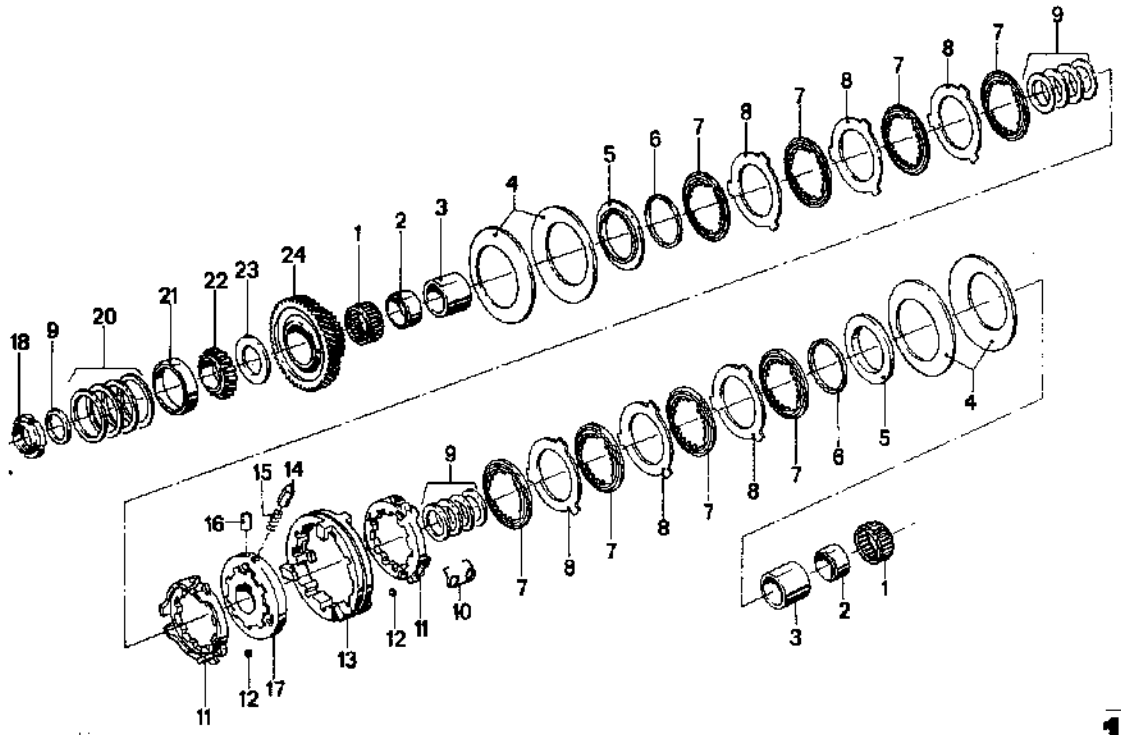

**27**
**11/4**
D 35/D 50
2/85

**27 11/4** 2/85

| Nr. | Teile-Nummer | Symbol | Benennung | D 35–1 | D 35–2 | D 50–1 | D 50–2 | Bemerkung |
|---|---|---|---|---|---|---|---|---|
| 21 | 27 63 1 331 327 | | Kegelrollenlager / Tapered roller bearing / Roulement à rouleaux coniques / Koniskt rullager / Cusc. a rulli conici | 4 | | 4 | | |
| 22 | 27 63 1 331 328 | | dito | 4 | | 4 | | |
| 23 | a 27 63 1 331 307 | | Scheibe / Flat washer / Rondelle / Bricka / Rondella | 2 | | 2 | | |
| | b 27 63 1 761 469 | | dito | 2 | 2 | 2 | 2 | |
| | c 27 63 1 761 533 | | dito | 2 | 2 | 2 | 2 | |
| 24 | a 27 63 1 761 450 | | Z = 40 Zahnrad / Toothed wheel / Roue dentée / Kugghjul / Ruota dentata | 1 | 1 | 1 | 1 | HBW-100 – 1,5 R |
| | a 27 63 1 761 449 | | Z = 43 dito | 1 | 1 | 1 | 1 | HBW-100 – 2,0 R |
| | b 27 63 1 761 488 | | Z = 42 dito | 1 | 1 | 1 | 1 | HBW-150 – 1,5 R |
| | b 27 63 1 761 486 | | Z = 45 dito | 1 | 1 | 1 | 1 | HBW-150 – 2,0 R |
| | b 27 63 1 761 484 | | Z = 50 dito | 1 | 1 | 1 | 1 | HBW-150 – 2,5 R |
| | c 27 63 1 761 550 | | Z = 43 dito | 1 | 1 | 1 | 1 | HBW-150 – 1,5 R |
| | c 27 63 1 761 547 | | Z = 47 dito | 1 | 1 | 1 | 1 | HBW-250 – 2,0 R |
| | c 27 63 1 761 544 | | Z = 52 dito | 1 | 1 | 1 | 1 | HBW-250 – 3,0 R |

a) HBW-100
b) HBW-150
c) HBW-250

Spray, Lack
Spray, Varnish
Bombe aérosol, Peinture
Spray, Lack
Spray, Vernici



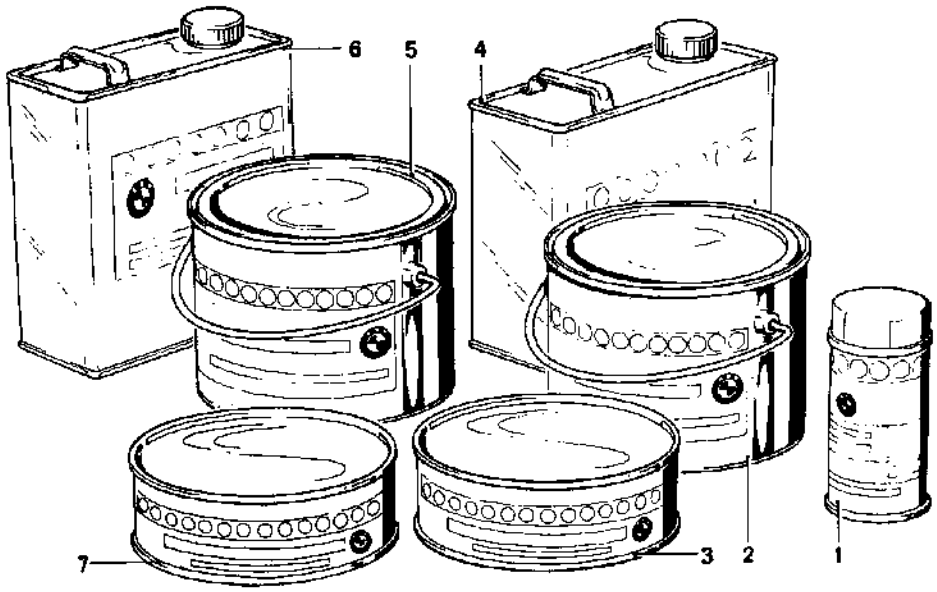


**51 / 1**
D 35/D 50
2/85

**51 / 1** 2/85

| Nr. | Teile-Nummer | Symbol | Benennung | D35-1 | D35-2 | D50-1 | D50-2 | Bemerkung |
|---|---|---|---|---|---|---|---|---|
| 1 | a 51 91 1 330 467 | | 400 ML Spray-silbergrau / Silver grey spray / Bombe aérosol gris argent / Spray i silbergrå / Spray grigio-argento | X | X | X | X | |
| 2 | b 51 91 1 330 468 | | 5000 ML silbergrau / silver grey / gris argent / silvergrå / grigio-argento | X | X | X | X | |
| 3 | c 51 91 1 330 469 | | 2000 ML Härter / Hardener / Durcisseur / Härdningsmedel / Induritore | X | X | X | X | |
| 4 | 51 91 1 330 470 | | 5000 ML Verdünner / Thinner / Diluant / Utspädningsmedel / Diluente | X | X | X | X | |
| 5 | 51 91 1 330 471 | | 5000 ML Primer / Primer / Primer / Primer / Primer | X | X | X | X | |
| 6 | 51 91 1 330 502 | | 5000 ML Verdünner für Primer / Thinner for primer / Diluant pour primer / Utspädningsmedel för primer / Diluente per primer | X | X | X | X | |
| 7 | d 51 91 1 330 481 | | 2000 ML Härter für Primer / Hardener for primer / Durcisseur pour primer / Härdningsmedel för primer / Induritore per primer | X | X | X | X | |

a) 1 Komponenten-Lack / Single-component varnish / Laque a une composante / Lack med 1 komponent / Vernice ad una componente
b) 2 Komponenten-Lack / Two-component varnish / Laque a deux composantes / Lack med 2 komponenter / Vernice a due componenti
c) n.i.V.m. Pos. 2
d) n.i.V.m. Pos. 5

Instrumententafel
Instrument panel
Tableau des instruments
Instrumenttavla
Cruscotto

BMW D 35 / D 50

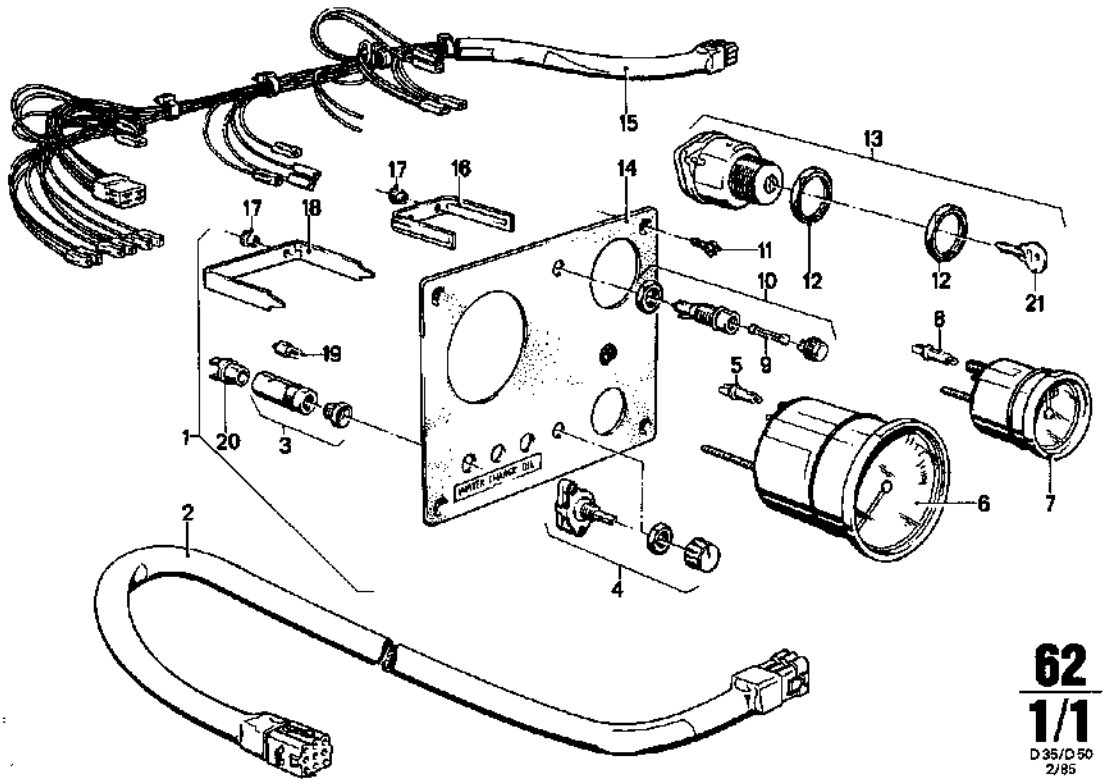


**62**
**1/1**
D 35/D 50
2/85

| 62 1/1 2/85 | | | | D 35–1 | D 35–2 | D 50–1 | D 50–2 | | |
|---|---|---|---|---|---|---|---|---|---|
| Nr. | Teile-Nummer | Symbol | Benennung | | | | | | Bemerkung |
| 1 | 62 11 1 331 919 | | kpl. Instrumententafel / Instrument panel / Tableau des instruments / Instrumenttavla / Cruscotto | 1 | | 1 | | | |
| 2 | 61 11 1 331 923 | | Motor-Kabelbaum / Motor, cable harness / Moteur, harnais de câbles / Motor, kabelboom / Cavi fasciati del motore | 1 | | 1 | | | |
| 3 | 61 14 8 648 136 | | Kontrolleuchte / Telltale lamp / Lampe témoin / Kontrollampa / Spia luminosa | 3 | | 3 | | | |
| 4 | 61 31 1 331 910 | | Potentiometerschalter / Potentiometer switch / Rhéostat Potentiometer – omkopplare / Reostato | 1 | | 1 | | | |
| 5 | 07 11 9 978 254 | | H 12 V – 2 W Glühlampe / Bulb / Ampoule / Glödlampa / Lampada a incandescenza | 1 | | 1 | | | |
| 6 | 62 13 1 329 954 | | Drehzahlmesser / Tachometer / Compte-tours / Varvtalsmätare / Contagiri | 1 | | 1 | | | |
| 7 | 62 13 1 326 927 | | Betriebsstundenzähler / Hourmeter / Compte-heures de service / Räkneverk för drifttimmar / Contatore delle ore di servizio | 1 | | 1 | | | |
| 8 | 07 11 9 978 279 | | J 12 V – 2 W Glühlampe / Bulb / Ampoule / Glödlampa / Lampada a incandescenza | 1 | | 1 | | | |
| 9 | 61 13 1 331 916 | | 8 A Feinsicherung / Precision fuse / Fusible fin / Finsäkring / Bloccaggio di precisione | 1 | | 1 | | | |
| 10 | 61 13 1 328 974 | | Sicherungshalter / Fuse holder / Porte-fusible / Säkringshållare / Portafusibile | 1 | | 1 | | | |
| 11 | 07 11 9 902 520 | | 6L SHR B 4,2 × 16 | 4 | | 4 | | | |
| 12 | 61 32 1 326 930 | | 6 KT MU | 2 | | 2 | | | |
| 13 | 61 32 1 326 929 | | Zündanlaßschalter / Ignition-starter swich / Commutateur de démarreur / Tändstartkontakt / Interruttore d'avviamento | 1 | | 1 | | | |
| 14 | 62 11 1 331 908 | | Instrumententafel / Instrument panel / Tableau des instruments / Instrumenttavla / Cruscotto | 1 | | 1 | | | |
| 15 | 61 11 1 331 907 | | Instr.-Kabelbaum / Instrument cable harness / Faisceau de câbles d'instruments / Kabelstam för instrumenten / Cavi fasciati – strumenti | 1 | | 1 | | | |
| 16 | 62 13 1 328 355 | | Befestigungsbügel / Mounting clamp / Etrier de fixation / Infästningsbygel / Staffa di fissaggio | 1 | | 1 | | | |

V-12 Engineering
Box 50, Ontario, Canada P0X 1C0
www.bmwmarine.net

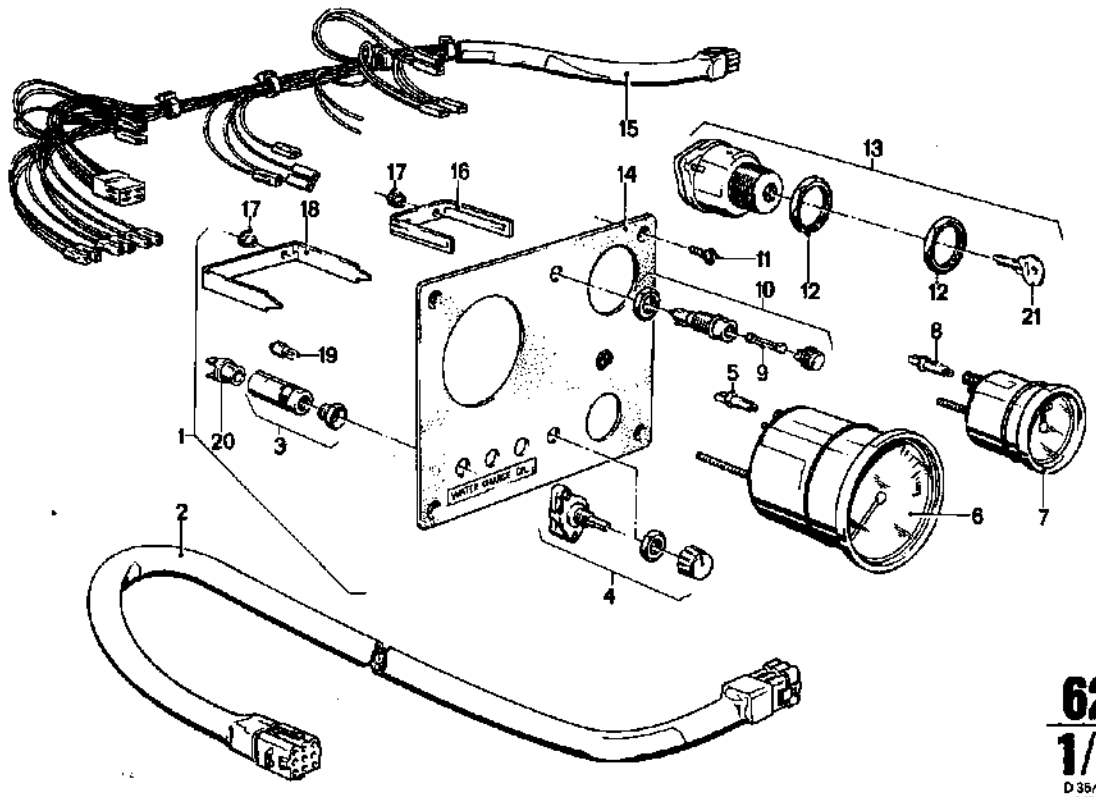


**62 1/2**
D 35/50
2/85

| 62 1/2 2/85 | | | | | | | | | |
|---|---|---|---|---|---|---|---|---|---|
| Nr. | Teile-Nummer | Symbol | Benennung | | D 35–1 | D 35–2 | D 50–1 | D 50–2 | Bemerkung |
| 17 | 62 13 1 326 916 | | Rändelmutter / Knurled nut / Ecrou moleté / Räfflad mutter / Dado zigrinato | | 4 | | 4 | | |
| 18 | 62 13 1 326 917 | | Befestigungsbügel / Mounting clamp / Etrier de fixation / Infästningsbygel / Staffa di fissaggio | | 1 | | 1 | | |
| 19 | 07 11 9 978 256 | | 12 V 4 W Glühlampe / Bulb / Ampoule / Glödlampa / Lampada a incandescenza | | 1 | | 1 | | |
| 20 | 62 14 8 680 131 | | Lampenfassung / Light socket / Pied d'ampoule / Lamphållare / Portalampada | | 3 | | 3 | | |
| 21 | 62 32 1 333 976 | | Zündschlüssel-Rohling / Ignition key blank / Clé de contact-brute / Råämne för tändnyckel / Spezzone chiavetta d'accensione | | 1 | | 1 | | |

Instrumententafel – IDEA
Instrument panel – IDEA
Tableau des instruments – IDEA
Instrumenttavla – IDEA
Cruscotto – IDEA

V12 Engineering
Box 50, Ontario, Canada P0X 1C0
www.bmwmarine.net

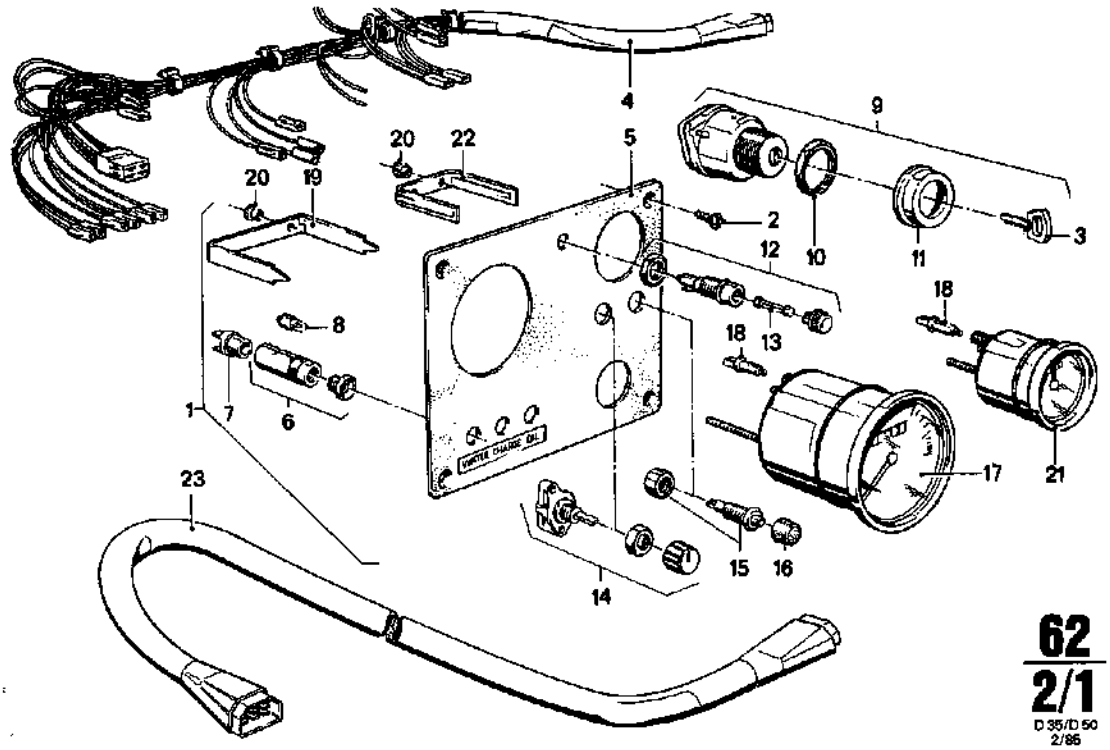


**62 / 2/1**
D 35/D 50
2/86

| 62 / 2/1 (2/85) Nr. | Teile-Nummer | Symbol | Benennung | D 35–1 | D 35–2 | D 50–1 | D 50–2 | Bemerkung |
|---|---|---|---|---|---|---|---|---|
| 1 | a 82 10 1 331 951 | | kpl. Instrumententafel / Instrument panel / Tableau des instruments / Instrumenttavla / Cruscotto | 1 | | 1 | | IDEA |
| 2 | 07 11 9 902 520 | | BL SHR | 4 | 4 | 4 | 4 | |
| 3 | a 61 32 1 334 019 | | Zündschlüssel-Rohling / Ignition key blank / Clé de contact-brute / Råämne för tändnyckel / Spezzone chiavetta d'accensione | X | X | X | X | |
| 4 | a 61 11 1 331 957 | | Instr.-Kabelbaum / Instrument cable harness / Faisceau de câbles d'instruments / Kabelstam för instrumenten / Cavi fasciati – strumenti | 1 | | 1 | | |
| 5 | a 62 11 1 331 959 | | Instrumententafel / Instrument panel / Tableau des instruments / Instrumenttavla / Cruscotto | 1 | | 1 | | |
| 6 | 61 14 8 648 136 | | Kontrolleuchte rot / Telltale lamp red / Lampe témoin rouge / Kontrollampa röd / Spia luminosa rosso | 3 | 3 | 3 | 3 | |
| 7 | 62 14 8 680 131 | | Lampenfassung / Light socket / Pied d'ampoule / Lamphållare / | 4 | 4 | 4 | 4 | |
| 8 | 07 11 9 978 256 | | HL 12 V 4 W Glühlampe / Bulb / Ampoule / Glödlampa / Lampada a incandescenza | 3 | 3 | 3 | 3 | |
| 9 | a 61 32 1 331 960 | | kpl. Zündanlaßschalter / Ignition-starter switch / Commutateur de démarreur / Tändstartkontakt / Interruttore d'avviamento | 1 | 1 | 1 | 1 | |
| 10 | a 61 32 1 331 971 | | 6 KT MU | 1 | 1 | 1 | 1 | |
| 11 | a 61 32 1 331 972 | | Schutzkappe / Protection cap / Capot de protection / Skyddskåpa / Cappelot. d. protezione | 1 | 1 | 1 | 1 | |
| 12 | 61 13 1 328 974 | | Sicherungshalter / Fuse holder / Porte-fusible / Säkringshållare / Portafusibile | 1 | 2 | 1 | 2 | |
| 13 | 61 13 1 328 916 | | 8 A Feinsicherung / Precision fuse / Fusible fin / Finsäkring / Bloccaggio di precisione | 1 | 2 | 1 | 2 | |
| 14 | 61 31 1 331 910 | | kpl. Potentiometer / Potentiometer / Potentiomètre / Potentiometer / Potentiometer | 1 | 1 | 1 | 1 | |
| 15 | a 61 31 1 333 901 | | kpl. Motorstop / Engine stop / Touche d'arrêt du moteur / Motorstopp / Arresto motore | 1 | 1 | 1 | 1 | |

a) Mot.-Nr. 644–648 / 657 / 661 →

Instrumententafel – IDEA
Instrument panel – IDEA
Tableau des instruments – IDEA
Instrumenttavla – IDEA
Cruscotto – IDEA



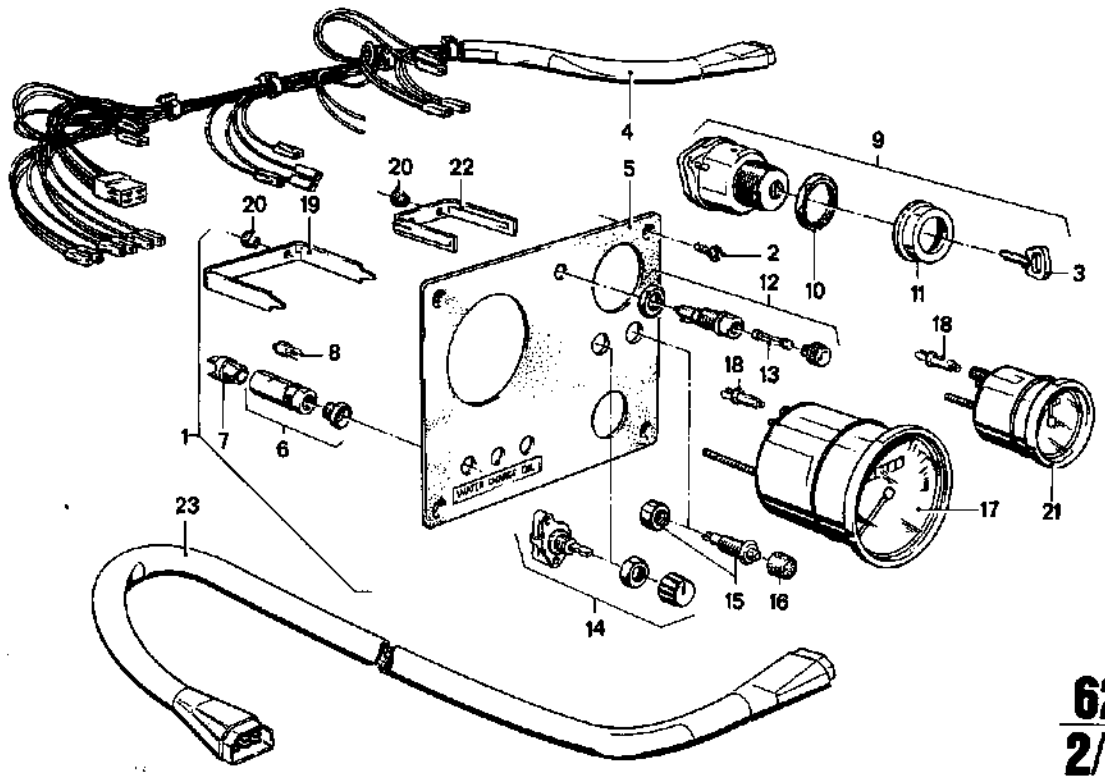


**62**
**2/2**
D 35/D 50
2/85

**62 2/2** 2/85

| Nr. | Teile-Nummer | Symbol | Benennung | D 35–1 | D 35–2 | D 50–1 | D 50–2 | Bemerkung |
|---|---|---|---|---|---|---|---|---|
| 18 | a 61 31 1 333 903 | | Schutzkappe / Protection cap / Capot de protection / Skyddskåpa / Cappelot. d. protezione | 1 | 1 | 1 | 1 | |
| 17 | a 62 13 1 333 981 | | Drehzahlmesser mit Betriebsstundenzähler / Tachometer with hourmeter / Compte-tours avec compte-heures de service / Varvtalsmätare med räkneverk för drifttimmar / Contagiri con contatore delle ore di servizio | 1 | | 1 | | |
| 18 | 07 11 9 878 264 | | H 12 V 2 W Glühlampe / Bulb / Ampoule / Glödlampe / Lampada a incandescenza | 1 | 1 | 1 | 1 | |
| 19 | a 62 13 1 331 986 | | Befestigungsbügel / Mounting clamp / Etrier de fixation / Infästningsbygel / Staffa di fissaggio | 1 | 1 | 1 | 1 | |
| 20 | 62 13 1 331 970 | | Rändelmutter / knurled nut / Ecrou moleté / Räfflad mutter / Dado zigrinato | 4 | 6 | 4 | 6 | |
| 21 | a 62 13 1 331 967 | | kpl. Voltmeter / Voltmeter / Voltmètré / Voltmeter / Voltimetro | 1 | 1 | 1 | 1 | |
| 22 | a 62 13 1 331 969 | | Befestigungsbügel / Mounting clamp / Etrier de fixation / Infästningsbygel / Staffa di fissaggio | 1 | 2 | 1 | 2 | |
| 23 | a 12 51 1 333 913 | | 4 m Kabelbaum / Cable harness / Faisceau de câble / Kabelbom / Fascio di cavi | 1 | 1 | 1 | 1 | |

a) Mot.-Nr. 644–648 / 657 / 661→

Instrumententafel – IDEA
Instrument panel – IDEA
Tableau des instruments – IDEA
Instrumenttavla – IDEA
Cruscotto – IDEA



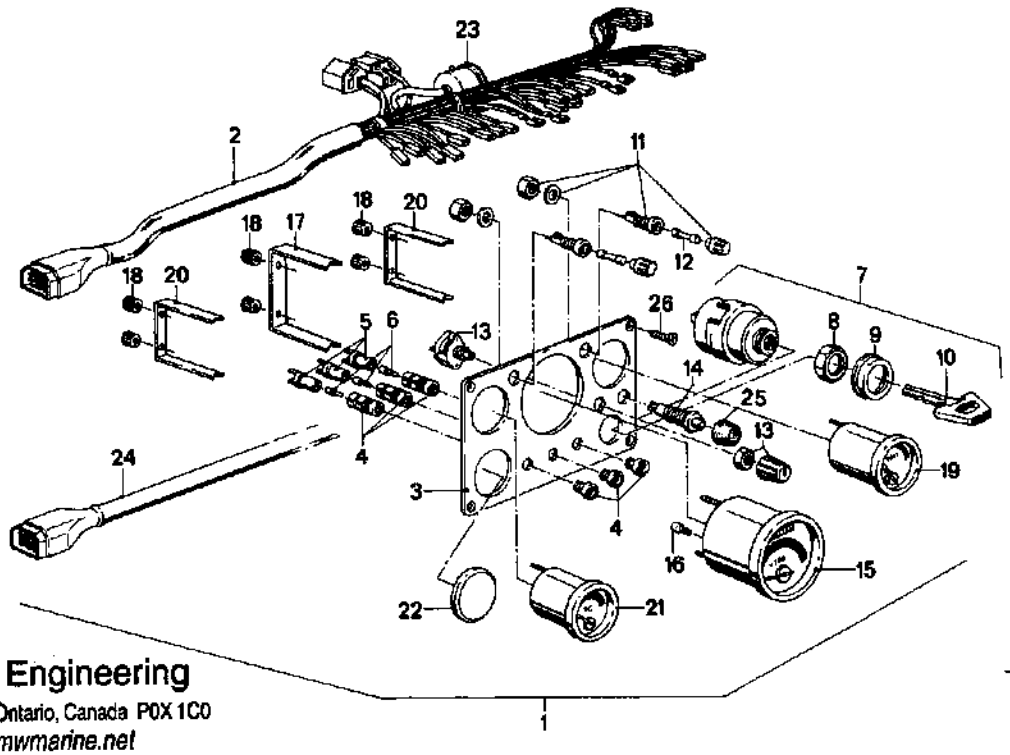


V12 Engineering
Box 50, Ontario, Canada P0X 1C0
www.bmwmarine.net



| 62 3/1 2/85 | | | | D 35–1 | D 35–2 | D 50–1 | D 50–2 | | |
|---|---|---|---|---|---|---|---|---|---|
| Nr. | Teile-Nummer | Symbol | Benennung | | | | | | Bemerkung |
| 1 | 62 11 1 333 933 | | kpl. Instrumententafel / Instrument panel / Tableau des instruments / Instrumenttavla / Cruscotto | | 1 | | 1 | | IDEA |
| 2 | 61 11 1 333 927 | | Instr.-Kabelbaum / Instrument cable harness / Faisceau de câbles d'instruments / Kabelstam för instrumenten / Cavi fasciati – strumenti | | 1 | | 1 | | |
| 3 | 62 11 1 333 928 | | Instrumententafel / Instrument panel / Tableau des instruments / Instrumenttavla / Cruscotto | | 1 | | 1 | | |
| 4 | 61 14 8 648 136 | | Kontrolleuchte rot / Telltale lamp red / Lampe témoin rouge Kontrollampa röd / Spia luminosa rosso | 3 | 3 | 3 | 3 | | |
| 5 | 62 14 8 680 131 | | Lampenfassung / Light socket / Pied d'ampoule / Lamphållare / Portalampada | 4 | 4 | 4 | 4 | | |
| 6 | 07 11 9 978 256 | | HL 12 V 4 W Glühlampe / Bulb / Ampoule / Glödlampa / Lampada a incandescenza | 3 | 3 | 3 | 3 | | |
| 7 | 61 32 1 331 960 | | kpl. Zündanlaßschalter / Ignition-starter switch / Commutateur de démarreur / Tändstartkontakt / Interruttore d'avviamento | 1 | 1 | 1 | 1 | | |
| 8 | 61 32 1 331 971 | | 6 KT MU | 1 | 1 | 1 | 1 | | |
| 9 | 61 32 1 331 972 | | Schutzkappe / Protection cap / Capot de protection / Skyddskåpa / Cappelot. d. protezione | 1 | 1 | 1 | 1 | | |
| 10 | 62 32 1 334 019 | | Zündschlüssel-Rohling / Ignition key blank / Clé de contact-brute / Råämne för tändnyckel / Spezzone chiavetta d'accensione | X | X | X | X | | |
| 11 | 61 13 1 328 974 | | Sicherungshalter / Fuse holder / Porte-fusible / Säkringshållare / Portafusibile | 1 | 2 | 1 | 2 | | |
| 12 | 61 13 1 331 916 | | 8 A Feinsicherung / Precision fuse / Fusible fin / Finsäkring / Bloccaggio di precisione | 1 | 2 | 1 | 2 | | |
| 13 | 61 31 1 331 910 | | kpl. Potentiometer / Potentiometer / Potentiomètre / Potentiometer / Potentiometer | 1 | 1 | 1 | 1 | | |
| 14 | 61 31 1 333 901 | | kpl. Motorstop / Engine stop / Touche d'arrêt du moteur / Motorstopp / Arresto motore | 1 | 1 | 1 | 1 | | |
| 15 | 62 13 1 334 001 | | Drehzahlmesser mit Betriebsstundenzähler / Tachometer with hourmeter / Compte-tours avec compte-heures de service / Varvtalmätare med räkneverk för drifttimmar / Contagiri con contatore delle ore di servizio | | 1 | | 1 | | |

Instrumententafel – IDEA
Instrument panel – IDEA
Tableau des instruments – IDEA
Instrumenttavla – IDEA
Cruscotto – IDEA



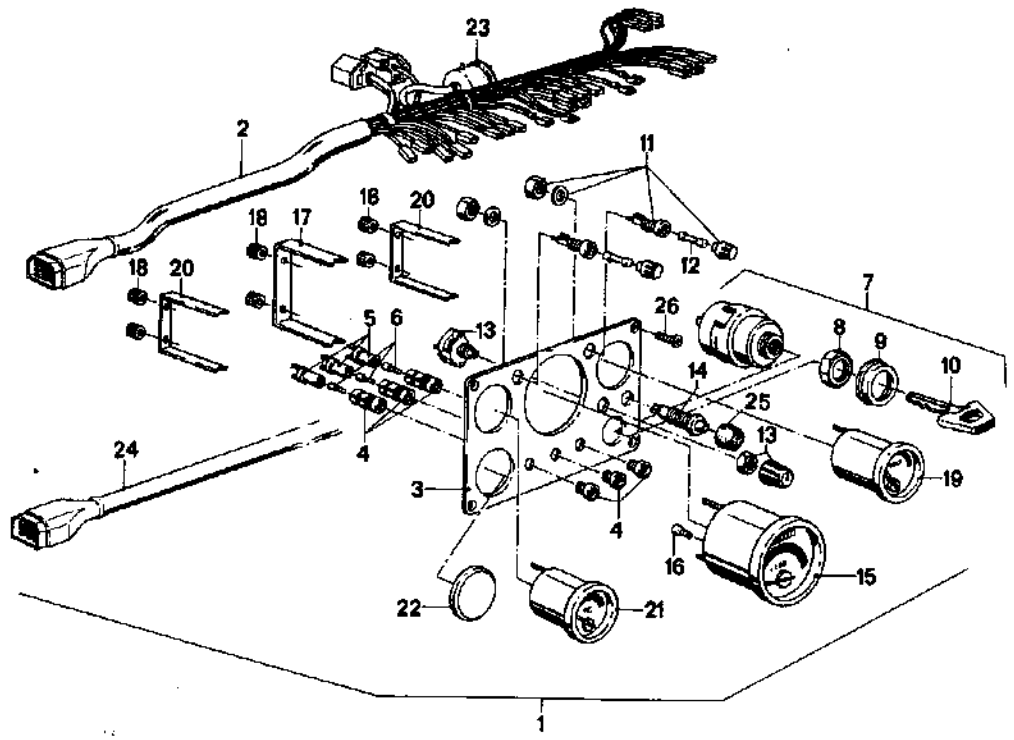


**62 / 3/2**
D 35/D 50
2/85

**62 / 3/2** 2/85

| Nr. | Teile-Nummer | Symbol | Benennung | D 35–1 | D 35–2 | D 50–1 | D 50–2 | Bemerkung |
|---|---|---|---|---|---|---|---|---|
| 16 | 07 11 9 978 254 | | H 12 V 2 W Glühlampe / Bulb / Ampoule / Glödlampe / Lampada a incandescenza | 1 | 1 | 1 | 1 | |
| 17 | 62 13 1 331 965 | | Befestigungsbügel / Mounting clamp / Etrier de fixation / Infästningsbygel / Staffa di fissaggio | 1 | 1 | 1 | 1 | |
| 18 | 62 13 1 331 970 | | Rändelmutter / Knurled nut / Ecrou moleté / Räfflad mutter / Dado zigrinato | 4 | 6 | 4 | 6 | |
| 19 | 62 13 1 331 867 | | Voltmeter / Voltmeter / Voltmètre / Voltmeter / Voltimetro | 1 | 1 | 1 | 1 | |
| 20 | 62 13 1 331 969 | | Befestigungsbügel / Mounting clamp / Etrier de fixation / Infästningsbygel / Staffa di fissaggio | 1 | 2 | 1 | 2 | |
| 21 | 62 13 1 331 989 | | kpl. Wasserthermometer / Water thermometer / Thermomètre d'eau / Vattentermometer / Termometro per acqua | | 1 | | 1 | |
| 22 | 62 13 1 333 924 | | Ø 60 Blinddeckel / Blind cover / Couvercle d'obturation / Blindlock / Coperchio cieco | | 1 | | 1 | |
| 23 | 61 31 1 331 993 | | Summer / Buzzer / Ronfleur / Summer / Cicalino | | 1 | | 1 | |
| 24 | 12 51 1 333 913 | | 4 m Kabelbaum / Cable harness / Faisceau de câble / Kabelbom / Fascio di cavi | 1 | 1 | 1 | 1 | |
| 25 | 61 31 1 333 903 | | Schutzkappe / Protection cap / Capot de protection / Skyddskåpa / Cappelot. d. protezione | 1 | 1 | 1 | 1 | |
| 26 | 07 11 9 902 520 | | BLSHR | 4 | 4 | 4 | 4 | |

Instrumententafel – VDO
Instrument panel – VDO
Tableau des instruments – VDO
Instrumenttavla – VDO
Cruscotto – VDO



V12 Engineering
Box 50, Ontario, Canada P0X 1C0
www.bmwmarine.net

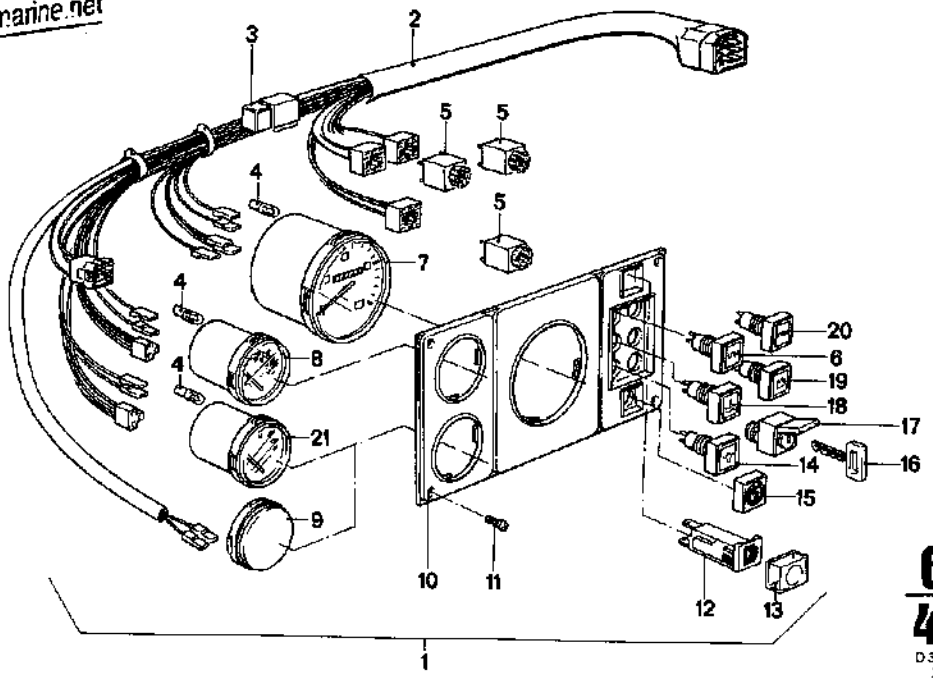


**62 4/1**
D 35/D 50
2/85

**62 4/1** 2/85

| Nr. | Teile-Nummer | Symbol | Benennung | D 35–1 | D 35–2 | D 50–1 | D 50–2 | Bemerkung |
|---|---|---|---|---|---|---|---|---|
| 1 | a 62 10 1 334 138 | | kpl. Instrumententafel / Instrument panel / Tableau des instruments / Instrumenttavla / Cruscotto | 1 | | 1 | | VDO |
| | b 82 10 1 334 141 | | dito | | 1 | | 1 | VDO |
| 2 | 61 11 1 334 140 | | Kabelbaum-Instrumente / Cable harness – instruments / Faisceau de câbles – instruments / Kabelstam – instrument / Cavi fasciati – strumenti | 1 | 1 | 1 | 1 | |
| 3 | 61 31 1 373 586 | | Kleinrelais / Minirelay / Relais miniature / Litet relä / Minirelais | 1 | 1 | 1 | 1 | |
| 4 | 07 11 9 978 254 | | H 12 V 2 W-Lampe / Bulb / Lampes / Lamp / Lampada | 2 | 3 | 2 | 3 | |
| 5 | 61 31 1 334 113 | | Tastkontaktgeber / Touch contactor / Contacteur à touche / Kontaktgivare / Contattore a tasto | 3 | 3 | 3 | 3 | |
| 6 | 61 31 1 334 114 | | Drucktaster – Stop / Push button – stop / Bouton-poussoir / Tryckknapp – stop / Pulsante a tasto di arresto | 1 | 1 | 1 | 1 | |
| 7 | 62 13 1 334 214 | | kpl. Drehzahlmesser / Tachometer / Compte-tours / Varvtalsmätare / Contagiri | 1 | 1 | 1 | 1 | |
| 8 | 62 13 1 334 120 | | kpl. Voltmeter / Voltmeter / Voltmètre / Voltmeter / Voltimetro | 1 | 1 | 1 | 1 | |
| 9 | 61 11 1 334 216 | | Blinddeckel / Blind cover / Couvercle d'obturation / Blindlock / Coperchio cieco | 1 | | 1 | | |
| 10 | 62 11 1 334 100 | | Instrumententafel / Instrument panel / Tableau des instruments / Instrumenttavla / Cruscotto | 1 | 1 | 1 | 1 | |
| 11 | 07 11 9 902 510 | | BL SHR B 4,2 × 16 | 4 | 4 | 4 | 4 | |
| 12 | 61 13 1 334 307 | | 8 A Sicherungsautomat / Automatic fuse / Coupe-circuit automatique / Automatsäkring / Autom. di sicurezza | 1 | 1 | 1 | 1 | |
| 13 | 61 13 1 334 308 | | Schutzkappe / Protection cap / Capot de protection / Skyddskåpa / Cappelot. d. protezione | 1 | 1 | 1 | 1 | |
| 14 | 62 14 1 334 105 | | Kontrolleuchte – Öldruck / Telltale lamp – Oil pressure / Lampe témoin – Pression d'huile / Kontrollampa – Oljetryck / Spia luminosa – pressione olio | 1 | 1 | 1 | 1 | |
| 15 | 61 13 1 334 153 | | BMW-Zeichen / BMW-signet / Emblème BMW / BMW emblem / Sigla BMW | 1 | 1 | 1 | 1 | |

a) Mot.Nr. → 1545 (D35-1) 1926 (D50-1)
b) Mot.Nr. → 1560 (D35-2) 1911 (D50-2)

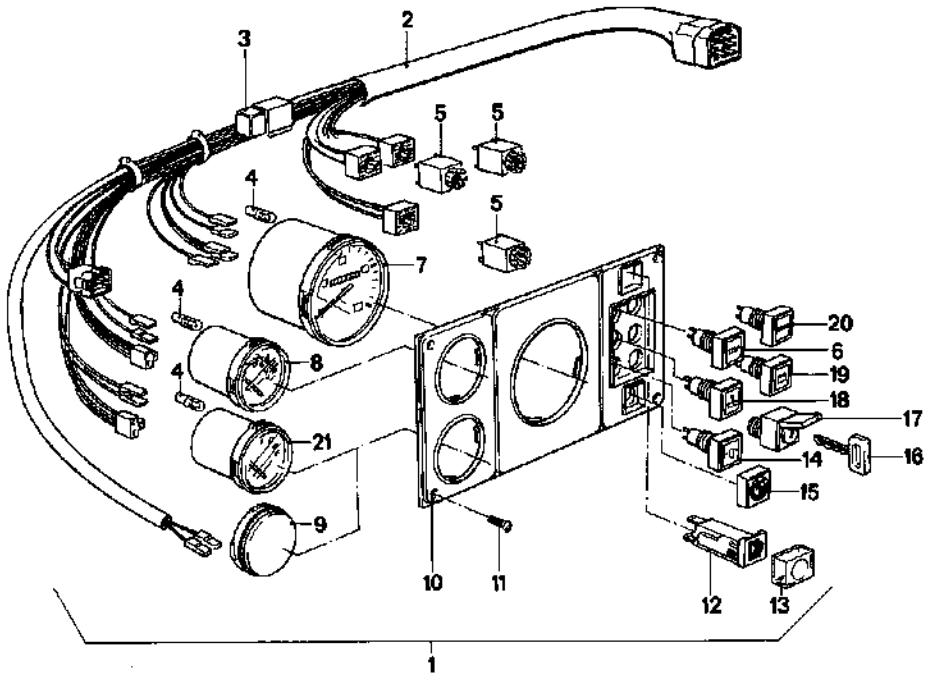


**62 / 4/2**
D35/50
2/85

**62 / 4/2** 2/85

| Nr. | Teile-Nummer | Symbol | Benennung | D35–1 | D35–2 | D50–1 | D50–2 | Bemerkung |
|---|---|---|---|---|---|---|---|---|
| 16 | 61 31 1 334 401 | | Nr. 93401 Zündschlüssel / Ignition key / Clé contact / Tändnyckel / Chiavetta dell'avviamento | X | X | X | X | |
| | 61 31 1 334 402 | | Nr. 93402 dito | X | X | X | X | |
| | 61 31 1 334 403 | | Nr. 93403 dito | X | X | X | X | |
| | 61 31 1 334 404 | | Nr. 93404 dito | X | X | X | X | |
| | 61 31 1 334 405 | | Nr. 93405 dito | X | X | X | X | |
| | 61 31 1 334 406 | | Nr. 93406 dito | X | X | X | X | |
| | 61 31 1 334 407 | | Nr. 93407 dito | X | X | X | X | |
| | 61 31 1 334 408 | | Nr. 93408 dito | X | X | X | X | |
| | 61 31 1 334 409 | | Nr. 93409 dito | X | X | X | X | |
| | 61 31 1 334 410 | | Nr. 93410 dito | X | X | X | X | |
| | 61 31 1 334 411 | | Nr. 93411 dito | X | X | X | X | |
| | 61 31 1 334 412 | | Nr. 93412 dito | X | X | X | X | |
| | 61 31 1 334 413 | | Nr. 93413 dito | X | X | X | X | |
| | 61 31 1 334 414 | | Nr. 93414 dito | X | X | X | X | |
| | 61 31 1 334 415 | | Nr. 93415 dito | X | X | X | X | |
| | 61 31 1 334 416 | | Nr. 93416 dito | X | X | X | X | |
| | 61 31 1 334 417 | | Nr. 93417 dito | X | X | X | X | |
| | 61 31 1 334 418 | | Nr. 93418 dito | X | X | X | X | |
| | 61 31 1 334 419 | | Nr. 93419 dito | X | X | X | X | |
| | 61 31 1 334 420 | | Nr. 93420 dito | X | X | X | X | |
| | 61 31 1 334 421 | | Nr. 93421 dito | X | X | X | X | |
| | 61 31 1 334 422 | | Nr. 93422 dito | X | X | X | X | |
| | 61 31 1 334 423 | | Nr. 93423 dito | X | X | X | X | |
| | 61 31 1 334 424 | | Nr. 93424 dito | X | X | X | X | |
| | 61 31 1 334 425 | | Nr. 93425 dito | X | X | X | X | |
| 17 | 61 31 1 334 117 | | Schlüsselschalter / Key-operated switch / Interrupteur à clé / Nyckelströmställare / Interruttore a chiave | 1 | 1 | 1 | 1 | |
| 18 | 61 14 1 334 179 | | Kontrolleuchte Wassertemperatur / Telltale lamp water temperature / Lampe témoin transmetter de température / Kontrollampa vattentemperatur / Spia luminosa temperatura dell'acqua | 1 | 1 | 1 | 1 | |

a) Mot.Nr. → 1545 (D35-1) 1928 (D50-1)
b) Mot.Nr. → 1560 (D35-2) 1911 (D50-2)

# Instrumententafel – VDO
# Instrument panel – VDO
# Tableau des instruments – VDO
# Instrumenttavla – VDO
# Cruscotto – VDO

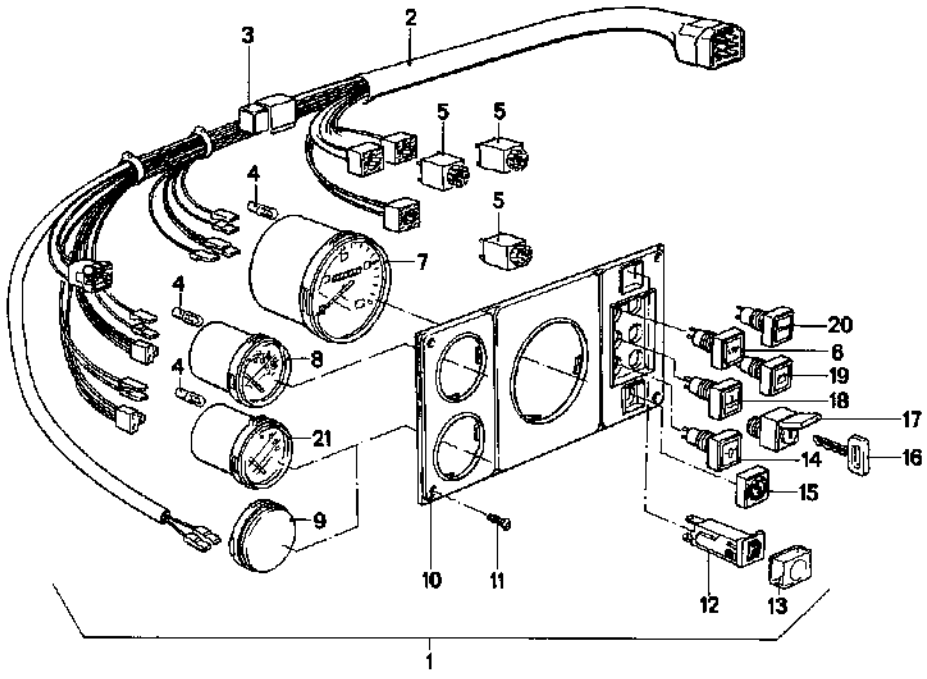


**62 4/3**
D 35/D 50
2/85

**62 4/3** 2/85

| Nr. | Teile-Nummer | Symbol | Benennung | D 35–1 | D 35–2 | D 50–1 | D 50–2 | Bemerkung |
|---|---|---|---|---|---|---|---|---|
| 19 | 62 14 1 334 106 | | Kontrolleuchte – Ladekontrolle / Telltalpe lamp – battery condition / Lampe témoin – Indicat. de charge / Kontrollampa – laddningskontr. / Spia luminosa – controllo carica | 1 | 1 | 1 | 1 | |
| 20 | 61 31 1 334 110 | | Drucktaster – Start / Press button – start / Bouton-poussoir, démarrage / Tryckknapp – start / Pulsante a tasto per l'avviamento | 1 | 1 | 1 | 1 | |
| 21 | 62 13 1 334 121 | | kpl. Wasserthermometer / Water thermometer / Thermomètre d'eau / Vattentermometer / Termometro per acqua | 1 | | 1 | | |

a) Mot.Nr. → 1545 (D35-1) 1926 (D50-1)
b) Mot.Nr. → 1560 (D35-2) 1911 (D50-2)

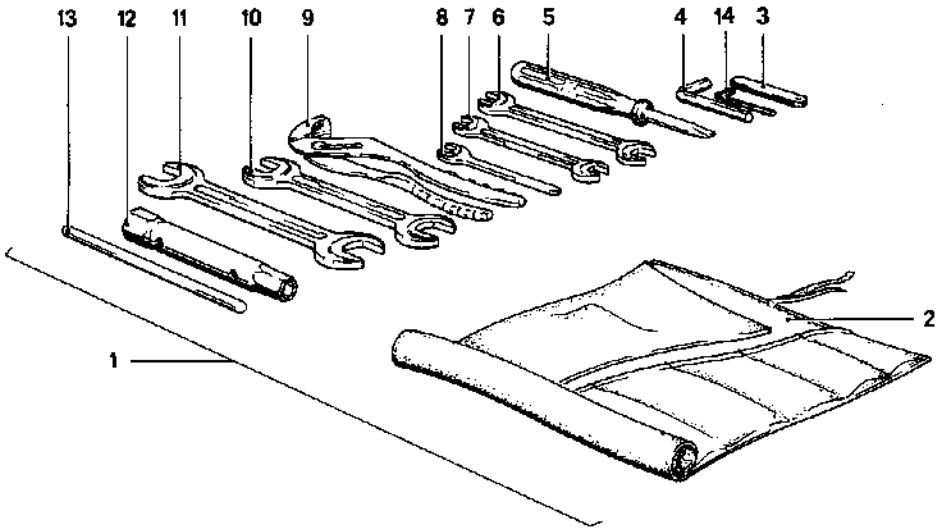


**74**
**1**
D 35/D 50
2/85

**74 1** 2/85

| Nr. | Teile-Nummer | Symbol | Benennung | D35–1 | D35–2 | D50–1 | D50–2 | Bemerkung |
|---|---|---|---|---|---|---|---|---|
| 1 | a 74 51 1 331 553 | | kpl. Bordwerkzeug / Tool kit / Trousse d'outils / Verktugssats / Utensile di bordo | 1 | 1 | 1 | 1 | |
| 2 | 74 51 1 331 003 | | Werkzeugtasche / Tool bag / Trousse à outils / Verktygsräska / Borsa utensili | 1 | 1 | 1 | 1 | |
| 3 | 74 51 1 333 567 | | Fühllehre / Feeler gauge / Goupille / Bladmatt / Calibro a lamelle di spessore | 1 | 1 | 1 | 1 | |
| 4 | 07 11 9 906 025 | | 6 Innensechskantschlüssel / Allen key / Clé pour boulons à six pans creaux / Inre skruvnyckel / Chiave con esagono incassato | 1 | 1 | 1 | 1 | |
| 5 | 71 11 1 103 086 | | dito | 1 | 1 | 1 | 1 | |
| 6 | 07 11 9 998 119 | | 12 × 14 Gabelschlüssel / Open end wrench / Clef / Öppen nyckel / Chiave a bocca fissa | 1 | 1 | 1 | 1 | |
| 7 | 07 11 9 999 117 | | 10 × 13 dito | 1 | 1 | 1 | 1 | |
| 8 | 07 11 9 999 050 | | 8 dito | 1 | 1 | 1 | 1 | |
| 9 | 71 11 9 092 709 | | Wasserpumpenzange / Water pumping tong / Tenailles à tuyaux / Vattenpumpstång / Pinza pompa acqua | 1 | 1 | 1 | 1 | |
| 10 | 07 11 9 999 100 | | 17 × 19 Gabelschlüssel / Open end wrench / Clef / Öppen nyckel / Chiave a bocca fissa | 1 | 1 | 1 | 1 | |
| 11 | 07 11 9 999 141 | | 22 × 24 dito | 1 | 1 | 1 | 1 | |
| 12 | 74 51 1 331 552 | | B 13 × 17 Steckschlüssel / Socket wrench / Clef à enfonc. / Sticknyckel / Chiave tubulare | 1 | 1 | 1 | 1 | |
| 13 | 07 11 9 948 511 | | A 10 Drehstift / Pin / Goupille / Pinne / Mandrino | 1 | 1 | 1 | 1 | |
| 14 | 07 11 9 906 020 | | 5 Innensechskantschlüssel / Allen key / Clé pour boulons à six pans creaux / Inre skruvnyckel / Chiave con esagono incassato | 1 | 1 | 1 | 1 | |

a) Standardausrüstung / Standard equipment / Equipement standard / Standardutrustning / Attrezzature standard

**V12 Enginneering**
Box 50, Keewatin
Ontario, Canada P0X 1C0
Tel:| 807.543.3003
Fax:| 807.543.2528
E-Mail:| rich@bmwmarine.net

**BMW MARINE ENGINES**
www.bmwmarine.net