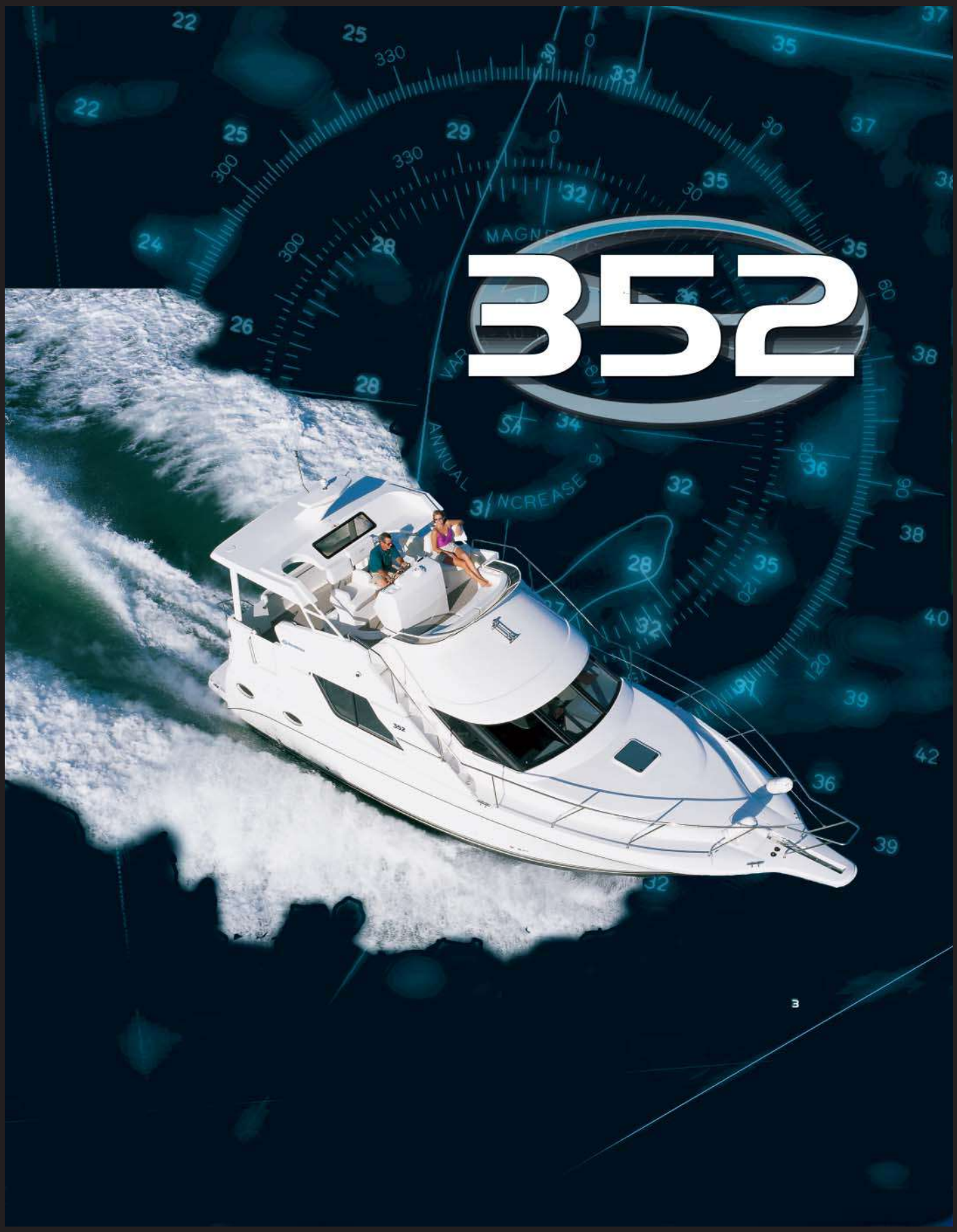

TABLE OF CONTENTS

SPECIFICATIONS

Overall Length - 39’ - 10.5”
Length at Waterline - 31’ - 10.875”
Beam - 14’ - 0”
Beam - Waterline - 11’ - 2”
Draft(Maximum) - 4’ - 0”
Displacement (dry) - 22,852 lbs.
Displacement (full fluids) - 26,252 lbs.
Transom Deadrise - 17 degrees

Power Options

Crusader 8.1 & Merc 8.1L
Cummings 330B & 370B
Caterpillar 3126 (350HP, 385HP and 420HP)

Fuel Capacity - 360 Gal.
Fresh Water Capacity - 100 Gal.
Waste Water Capacity - 55 Gal.
Water Heater Capacity - 10.5 Gal.
Average Headroom - 6’ - 6”
Maximum Recommended Number of Persons - 12
Maximum Recommended Load - 2,732 lbs

INTRODUCTION

*****

THANK YOU FROM THE PRESIDENT

Dear Silverton Owner,

Congratulations and welcome to the Silverton Family! As a Silverton owner, you will enjoy the quality and the attention to detail for which our Silverton yachts are renowned. Silverton and your dealer are committed to your service and total satisfaction.

This Owner's Manual will acquaint you with the proper operation and maintenance of your new Silverton yacht, as well as boating safety, which is our primary concern, whether docked or at sea.

Please mail in all manufacturers' registration and warranty cards to ensure that your Silverton and Original Equipment Manufacturer (O.E.M.) warranties are valid. The individual warranty cards are contained in the Owner's Packet along with all of the O.E.M. manuals. Please remember that all information contained in the O.E.M. manuals supersedes the information contained in this Owner's Manual.

Finally, if you are new to boating, be certain to learn the proper rules of seamanship to ensure your safety and the safety of your passengers. Refer to *Chapman's* Piloting, Seamanship and Small Boat Handling Manual for important and useful information concerning this aspect of boating. Attend a safe boating course offered by the United States Coast Guard Auxiliary, United States Power Squadron or any enterprise experienced in conducting safe boating courses.

Thank you for choosing a Silverton. I am confident your new yacht will provide you and your family with years of enjoyable cruising.

Richard Cerami
President

THE SILVERTON STORY

SILVERTON YACHT OWNERS AND FOUNDERS

WARREN LUHRS
JOHN LUHRS

Hailing from East Orange, New Jersey, John and Warren Luhrs' ancestry goes back to their great-grandfather, Henry, who helped pioneer the development of railroading and clipper ships in America, and to their great-uncle, John, who helped build the famous St. Petersburg-to-Moscow railroad for Russian Czar Alexander II.

Henry Luhrs owned shares in twenty-two different ocean-going vessels - barques, brigs and schooners - and was the principal owner of the barque, *Sophia R. Luhrs*, named after his wife. He was also a partner with Albert Sprout, who managed a shipyard in Melbridge, Maine, where the *Sophia R. Luhrs* was built.

The Luhrs' family sea tradition was carried on during the great Depression by John and Warren Luhrs' father, Henry, who worked at a small boat manufacturer in Morgan, New Jersey and later started his own company. When war broke out in Europe, the United States Coast Guard asked Henry Luhrs to repair their boats and install ice sheathing on their bows.

After World War II, Henry built 27-foot fishing boats and in 1948, he began to construct custom-built pleasure craft. He then turned to skiffs and in 1952, incorporated as *"Henry Luhrs Sea Skiffs"*. He constructed lap strake sea skiffs using assembly-line techniques. Henry personally "shook down" his prototypes with family trips up the Hudson River to Lake Champlain.

Henry Luhrs' basic philosophy was to emulate the late Henry Ford in building an inexpensive boat for the average man, thus enabling him to enjoy the luxury of boating. He was both designer and engineer, creating innovative and progressive new models. He designed the change in the line of the bow from straight to curved at a time when all boats were being built with the straight, square effect. It is believed he was also the first designer-builder to popularize a small boat with a flybridge.

In 1960, Henry Luhrs acquired the *Ulrichsen Boat Company*, located in Marlboro, New Jersey. It was here, too, that the *Luhrs Alura Fiberglass Division* was located. In 1965, Henry sold his company to Bangor Arrostook Railroad, which was to become the recreational conglomerate, Bangor-Punta. It was also during this period that the Silverton Company, Toms River, New Jersey was purchased by his sons, John and Warren Luhrs.

Today John and Warren, own *Silverton Marine Corporation*, *Hunter Marine Corporation*, *Mainship Motor Yachts Corporation* and *Luhrs Fishing Boats Corporation*, known as the "Luhrs Marine Group."

In January, 1996, John and Warren transferred a portion of the Luhrs Marine Group to its employees through an Employee Stock Ownership Program, ensuring a personal interest in the construction of your Silverton yacht.

INTRODUCTION TO YOUR 352 MOTOR YACHT OWNER'S MANUAL

We appreciate your selection of the Silverton **352 Motor Yacht**. We have designed and manufactured this yacht to bring you a strong, safe and attractive yacht that will provide you with many years of pleasure and pride in ownership.

All Silverton yachts are built in compliance with applicable United States Coast Guard regulations and recommendations. In addition, our yachts meet or exceed all standards developed by the National Marine Manufacturer's Association for its "Yacht Certification Program".

This Owner's Manual includes general information concerning the operation, handling and maintenance of your **352 MY** . In addition, the various systems and standard and optional factory installed equipment are described. **Please note that the information contained in this Owner's Manual summarizes the detailed information contained in the Original Equipment Manufacturer's (O.E.M.) manuals, contained in the Owner's Packet, and is only intended to be a convenient reference for your daily use**. Refer to the appropriate O.E.M. manual for detailed information concerning the operation and maintenance of its respective piece of equipment.

Maintain your Owner's Manual and the Owner's Packet together in a safe, convenient location that is easily accessible for readily available reference.

General information designed to assist you in understanding the contents of your Owner's Manual is as follows:

HAZARD COMMUNICATION

This Owner's Manual contains certain signal graphics designed to call your attention to important and specific information. These graphics are shown as follows:

DANGER calls attention to immediate hazards that **WILL** result in severe personal injury or death.

WARNING identifies hazards or unsafe practices that **COULD** result in severe personal injury or death.

CAUTION indicates hazards or unsafe practices that **COULD** result in minor personal injury or product or property damage.

OWNER ADVISORY STATEMENTS

This Owner's Manual contains certain advisory statements designed to alert you to conditions affecting equipment operation and maintenance practices and they are as follows:

Important: This is an advisory statement or procedure intended to prevent damage to equipment or its associated components.

Note: This is a general advisory statement relating to equipment and maintenance

procedures intended to call your attention to important information that is not contained within the normal text describing the specific issue.

SUMMARY OF OWNER'S MANUAL CONTENTS

Brief summaries of each section of this Owner's Manual are as follows:

Introduction

This section includes general information about your **352 MY**, warranty information, your responsibilities as the owner and/or operator, laws and regulations, logs and records.

Getting Familiar With Your 352 Motor Yacht

This section is like a tour, showing you the various accessories and appliances, both standard and optional, that are found on your **352 MY** . In addition, the Hull, Deck, Interior and Engine Compartment will be described.

Boating Safety

This section discusses potential hazards associated with boating, safety recommendations, safety information and safety practices. It also discusses safety equipment necessary to provide a reasonably safe operating environment.

Note: For your safety, this Owner's Manual has specific safety warnings and comments where appropriate. Be certain to read and have an understanding of the entire manual.

Systems Operation

This section explains the various systems found on your **352 MY** and their operation and maintenance procedures.

Operation of Your 352 Motor Yacht

This section explains what procedures you should follow before, during and after your boating excursion to make it an enjoyable and safe experience.

Maintenance of Your 352 Motor Yacht

Preventive maintenance is the key to trouble-free operation and helps to protect your investment. This section explains what you should do to maintain your **352 MY** and how to make basic adjustments and repairs. A Maintenance Chart summarizes maintenance tasks by frequency. Included are procedures for winterizing and storing your yacht.

Glossary of Terms

The Glossary defines common nautical terms and terms associated with your **352 MY** .

Systems Schematics

This section displays schematic drawings, such as the Mechanical Layout, Electrical Schematic and Fresh Water Schematic that may be useful to you in understanding the general layout of the systems described.

ORIGINAL EQUIPMENT MANUFACTURER'S MANUALS

Silverton purchased various items of equipment from other manufacturers and installed them on your yacht while it was being built. Examples of this equipment include, but are not limited to, the engines, generator (if so equipped) and appliances. The Original Equipment Manufacturers (O.E.M.) have provided operation and maintenance manuals describing their specific piece of equipment. **Although this Owner's Manual summarizes the information contained in the O.E.M. manuals, it does not replace them. In the event of a conflict between the information contained in this manual and the information contained in the O.E.M. manual, the O.E.M. manual takes precedence**. Maintain all O.E.M. manuals with this Owner's Manual in a safe, convenient location and be certain to pass them on to the new owner in the event you sell or trade your yacht.

WARRANTY INFORMATION

Silverton Yacht Dealers

Your Silverton yacht dealer is a trained professional with facilities and resources available to serve you to your complete satisfaction. Your dealer can assist you in all phases of yacht service and you should bring to his attention any problems you may not be able to correct. All warranty claims and subsequent service must be approved through your Silverton dealer. The Silverton warranty is reproduced in its entirety at the end of this section.

Pre-Delivery Service Record

Your Silverton yacht was thoroughly inspected before it was shipped from the factory. Your dealer also inspected it during the pre-delivery service inspection. Please take time to discuss these inspections, the Silverton warranty, component warranties and operation of your yacht with your dealer.

Your Silverton dealer completes a Pre-Delivery Service Record before you take delivery of your yacht. It is the dealer's responsibility to both you and to Silverton to give your yacht a final inspection. The purpose of this inspection is to assure the proper adjustment and operation of all components installed on your yacht. Your dealer should provide you with the Pre-Delivery Service Record at the time of delivery. After you and your dealer have signed the form, the original copy, along with your warranty card, is forwarded to Silverton.

Silverton will not pay warranty costs for items that should have been corrected during the pre-delivery service inspection and recorded on the Pre-Delivery Service Record.

Warranty Registration

All Silverton yachts are shipped to the dealer with a warranty registration form for the yacht. The warranty card should be completed and returned to Silverton, together with signed copies of the Pre-Delivery Service Record, within ten (10) days of delivery. **Failure to do so may void the warranty.**

Warranty Conditions

To avoid any misunderstanding of Silverton's warranty policy, we suggest that you discuss the following with your Silverton yacht dealer:

- All customer warranty claims and sub-sequent repairs must be approved through your Silverton dealer.

- Your yacht must be returned to your selling dealer for warranty repairs unless other arrangements between the dealer and the customer have been made before delivery. Silverton will not pay travel time or mileage for warranty claims.

- Silverton allows a set hourly rate for labor. If you use any service facility other than a Silverton dealer for warranty repairs, either the owner or the dealer must absorb any difference between what Silverton allows and what the "service contractor" may charge.

- Silverton will not assume any responsibility or liability for parts replaced or labor completed by anyone other than an

authorized Silverton dealer without prior authorization from Silverton.

- Silverton will not warrant items that should have been covered during the pre-delivery service inspection.

- Silverton will not be responsible for any problems or inconveniences that may be caused as a result of a defect.

- Silverton will not be responsible for any losses caused as a result of a defect for any reason.

Second Owner's Warranty

Some Silverton yacht owners trade up to a newer or larger yacht before the warranty on their current yacht has expired. Silverton will transfer the remaining warranty on your new yacht to its new owner. Conditions of the warranty transfer are stated in their entirety at the end of this section.

Owner's Responsibilities

Silverton service and support does not end after you purchase your yacht. Our dealers are committed to your total satisfaction with your yacht. They cannot accomplish this objective without your assistance. You are responsible for:

- Obtaining state registration or federal documentation.

- Providing and maintaining all safety equipment required by the United States Coast Guard.

- Completing and forwarding all Original Equipment Manufacturer's warranty registrations.

- Performing and completing Required OEM maintenance.

LIMITED WARRANTY

According to the U.S. Public Law No. 93-637, effective July 4, 1975, the following limited warranties apply to all 1999 Model Year boats produced by SILVERTON MARINE CORPORATION.

LIMITED ONE YEAR WARRANTY

SILVERTON MARINE CORPORATION warrants to the first-use purchaser and any subsequent owner during the warranty period that any part manufactured by SILVERTON will be free of defects caused by faulty workmanship or materials for a period of twelve (12) months from the date of delivery to the first-use purchaser under normal use and service. During this period, SILVERTON will repair or replace any part judged to be defective by SILVERTON.

LIMITED FIVE YEAR WARRANTY ON HULL STRUCTURE

SILVERTON warrants to the first-use purchaser and any subsequent owner during the warranty period that the hull of each boat will be free from structural defects in materials and workmanship for a period of five (5) years from the date of delivery to the first-use purchaser under normal use and service. This limited warranty applies only to the structural integrity of the hull and the supporting pan/grid or stringer system. Hulls, pan/grids or stringers modified in any way or powered with engines other than the type and size installed or specified by SILVERTON are not covered by this limited warranty. The obligation of SILVERTON under this limited warranty is limited to the repair or replacement of hulls that it determines to be structurally defective. This is your sole and exclusive remedy.

RESTRICTIONS APPLICABLE TO WARRANTIES

These limited warranties **do not cover:**

1. Bottom paint, paint, window glass, gelcoat, upholstery damage, plastic finishes, engines, engine parts, bilge pumps, stoves, blowers, pressure water pumps, propellers, shafts, rudders, controls, instruments and equipment not manufactured by SILVERTON. Any warranty made by the manufacturer of such items will be, if possible, given to the first-use purchaser.

2. Fiberglass blistering attributable, in the opinion of SILVERTON, to water penetration of the fiberglass (osmosis).

3. Problems caused by improper maintenance, storage, cradling or blocking, normal wear and tear, misuse, neglect, accident, corrosion, electrolysis or improper operation.

4. Speeds, fuel consumption and other performance characteristics because they are estimated and not guaranteed.

5. Boats used for commercial activities, including charter.

THESE LIMITED WARRANTIES ARE YOUR SOLE AND EXCLUSIVE REMEDIES AND ARE EXPRESSLY IN LIEU OF ANY AND ALL OTHER REMEDIES AND WARRANTIES EXPRESSED AND IMPLIED, INCLUDING THE WARRANTIES OF MERCHANTABILITY AND FITNESS. SOME STATES DO NOT ALLOW LIMITATIONS ON HOW LONG AN IMPLIED WARRANTY LASTS, SO THE ABOVE LIMITATION MAY NOT APPLY TO YOU. THE PURCHASER ACKNOWLEDGES THAT NO OTHER REPRESENTATIONS WERE MADE TO HIM OR HER WITH RESPECT TO THE QUALITY AND FUNCTIONS OF THE BOAT. ANY CONSEQUENTIAL DAMAGES WHICH MAY BE INCURRED ARE EXCLUDED AND PURCHASER'S REMEDY IS LIMITED TO REPAIR OR REPLACEMENT OF ANY PART(S) JUDGED DEFECTIVE BY SILVERTON. SOME STATES DO NOT ALLOW THE EXCLUSION OR LIMITATION OF INCIDENTAL DAMAGES, SO THE ABOVE LIMITATION OR EXCLUSION MAY NOT APPLY TO YOU. THIS WARRANTY GIVES YOU SPECIFIC LEGAL RIGHTS, AND YOU MAY ALSO HAVE OTHER RIGHTS WHICH VARY FROM STATE TO STATE.

WARRANTY REGISTRATION

These limited warranties shall not be effective unless the SILVERTON Warranty Registration Form and Pre-Delivery Service Record, which are furnished with each new boat, are filled out completely and returned to SILVERTON within ten (10) days of delivery.

The return to SILVERTON of the fully signed Warranty Registration Form is critical. Warranty coverage cannot be initiated until the completed form is received at SILVERTON.

All repairs and/or replacements will be made by an authorized SILVERTON dealer, or at the option of SILVERTON, at the SILVERTON plant. If the repairs are of such a nature that the warranty work must be performed at the SILVERTON plant, transportation costs to and from the SILVERTON plant shall be paid by the owner. The labor cost reimbursement will be based on the Labor Allowance Schedule established by SILVERTON and where not applicable, on a reasonable number of hours as determined by SILVERTON. Any repairs and replacements must be approved in advance by an authorized SILVERTON Service Representative.

TRANSFER OF LIMITED WARRANTIES

Effective with 1993 model year boats, these limited warranties will be transferred to a subsequent purchaser of the boat if:

1. A notice of the transfer of ownership of the boat is given by the subsequent purchaser in writing to SILVERTON within thirty (30) days of the transfer.

2. The notice shall include the name, address and telephone number of the subsequent purchaser, the date of purchase, the hull number and the name of the seller of the boat.

SILVERTON will mail to the subsequent purchaser notice of the expiration dates of the limited warranties. The transfer of the ownership of the boat will not extend the expiration dates of the limited warranties.

BOOKS AND PUBLICATIONS

Silverton recommends you purchase and read the following publications:

Piloting, Seamanship and Small Boat Handling
By Chapman

(Included with this manual compliments of Silverton Marine Corporation.)

Boatman's Handbook
By Tom Bottomly

Motorboat and Sailing
P.O. Box 2319, FDR Station
New York, New York 10002

The Complete Book of Maintenance and Repair
By Dave Kendall

Doubleday and Company
Garden City, New York 11530

Pleasure Boating and Seamanship
United States Coast Guard Auxiliary

306 Wilson Road Oaklands
Newark, Delaware 19711

RECORD KEEPING

Boat Record

Use the **Boat Record** (included at he end of this manual) to record all important information concerning your yacht and its equipment. After your dealer has recorded all the information, remove the record from your Owner's Manual and store in a safe, convenient location. **Do not** keep this form aboard your yacht.

Float Plan

The **Float Plan** (included at the end of this manual) provides a record of your destination, departure and return times, yacht description, passenger list and other information about the trip you have planned. At the bottom of the form is a space for listing emergency telephone numbers in case your return is delayed past the expected time. It also has space for indicating information about the person filing this report. Leave a copy of the completed form ashore with a responsible person. Carry the original form with you on your cruise and if you deviate from your original plan, be certain to notify the person with whom you left the copy of your change in plans. Silverton recommends you make several copies of this form each yachting season to ensure you have an adequate supply.

Maintenance Log

The **Maintenance Log** (included at the end of this manual) provides the means to keep maintenance records in one location. Using this log will allow you to track maintenance work completed and to determine when specific maintenance is required. Your Silverton dealer will also find this information helpful if you decide to sell or trade your yacht. The maintenance record will make your

yacht a more desirable purchase because it tells prospective buyers that you have maintained the proper care of the vessel on a regular basis.

ACCIDENT REPORTING

No one likes to think about having a boating accident, but unfortunately, they do occur. You must file an accident report after a boating accident just as you would after an automobile accident. A copy of the United States Coast Guard Accident Report is included with this Owner's Manual. You can obtain more copies of the report by calling the United States Coast Guard Boating Safety Hotline at 1-800-368-5647.

You are required to file an accident report with the United States Coast Guard within forty-eight (48) hours after the occurrence of an accident resulting in any one of the following:

- Loss of life.
- A person disappears from a vessel under circumstances that indicate the possibility of death or injury.
- Personal injury requiring medical treat-ment beyond first aid.
- Damage to the vessel or damage to prop-erty.*
- Complete loss of the vessel.

* State statutes determine whether you must file an accident report in this case. An accident report must be filed if the damage exceeds a threshold dollar value as established by the state in which the accident occurred. In most states, the threshold is $100.00 to $200.00. Contact the United States Coast Guard Boating Safety Hotline to verify the threshold for a particular state.

Note: State and local agencies may also have accident reporting requirements. Check with local enforcement agencies or with your local Silverton dealer regarding local requirements.

GETTING FAMILIAR WITH YOUR 352 MOTOR YACHT

This section of your Owner's Manual will give you a virtual tour of your new **352 MY**. The following areas will be described: Hull, Deck, Interior and Engine Compartment.

HULL AND TRANSOM

The photograph below displays the transom area of the **352 MY** . This is a typical layout displaying the drive mechanism. The photograph contains the following components as viewed from the Port side:

- Shaft
- Strut
- Propeller
- Rudders

Note: On diesel powered yachts, there is an additional strut forward of the one displayed below. The purpose of this extra strut is to provide additional support to the shaft.

The **Shaft** is connected to the engine transmission with a coupling and extends through the bottom of the hull, where it is connected to the propeller.

The shaft is supported forward of the propeller by one or two **Struts**, depending on engine model. The struts support and stabilize the shafts.

The rotation of the **Propellers** propels the yacht in the selected direction, controlled from the helm station.

The **Rudders** provide steering for the yacht to Port or Starboard, depending on the direction they are turned by the operator from the helm station steering wheel.

The **Zinc Anodes** are dealer installed on the shafts, rudders and transom for the purpose of preventing electrolysis and galvanic corrosion, which is discussed in the **Winterization and Storage Section** of this Owner's Manual.

Engine Seawater Pickup

The photograph below displays the **Engine Seawater Pickup** as shown on the Starboard side. The Engine Seawater Pickups are located on the bottom exterior of the hull forward of the engines and are used for “scooping” water for the engine cooling system.

Transom Anode Plate

The photograph below displays the **Transom Anode Plate**, which is a sacrificial zinc anode that is bolted to the transom and connected to the electrical bonding system. Its purpose is to prevent electrolysis and galvanic corrosion of the underwater components in your yacht, which is discussed in the **Bonding System Section** of this Owner’s Manual.

Trim Tabs

The photographs below display the Port and Starboard **Trim Tabs**, which are factory installed on the lower edge of the transom. The purpose of the Trim Tabs is to assist you in controlling the angle, both longitudinally and athwartships, that your yacht rides in the water during forward movement. The control panel for the Trim Tabs is located at the helm station.

Propellers

The **Propeller**s, or “Screws” are located underneath the rear portion of the hull. They are attached to the motor by the **shafts**. The Propellers on your 352 Motor Yacht are specific to your boat. Make sure you record the information and specifications of the **Propellers** just in case they need to be replaced in the future. The photographs below display the propeller rotation for the Port and Starboard sides.

Exhaust Ports

There are two **Engine Exhaust Ports**; one for each engine. The Port Engine Exhaust Port is located on the Port side of the hull forward of the transom and the Starboard Engine Exhaust Port is located on the Starboard side of the hull forward of the transom. The photograph below displays the Port Engine Exhaust Port. The Starboard Engine Exhaust Port is in the identical location on the Starboard side of the yacht. It also displays the Generator Exhaust Port, located directly aft of the port side Engine Exhaust Port.

Discharge Ports

The various **Discharge Ports** (also known as through-hull ports) are located on the Starboard side of the hull. Refer to the Thru-Hull Schematic drawings on Page 151 and 152, which illustrates the location of these ports.

Fuel Tank Vents

The photograph below displays the **Port Fuel Tank Vent** as shown on the Port side of the hull. The **Starboard Fuel Tank Vent** is located in the identical location on the Starboard side of the hull.

Note: Please refer to the Thru-Hull location Schematics on Page 151 and 152 for the location of the **Fuel Tank Vents** in proportion to the entire hull.

DECK AND BRIDGE

Anchor System

The photograph below displays the location of the Anchor, which is located in its bracket under the pulpit.

The photograph below displays the optional Anchor Windlass and controls, which are located on the forward section of the deck immediately aft of the pulpit.

WARNING **Be certain to keep hands and feet away from any moving parts while operating the Anchor System. Becoming entangled in the anchor line may result in serious injury or death.**

Search Light

The **352 MY** may be equipped with an optional **Search Light**, which is mounted on the forward portion of the pulpit. The photograph below displays the Search Light.

The Search Light direction and power controls are located at the helm station. The photograph below displays the Search Light controls on the helm station.

Warning Horns

The factory installed **Warning Horns** are mounted on the forward section of the bridge. The horns are self contained units operating on 12 v power supplied from the electrical system. The switch for the horns is located on the console (see console layout on page 147).

Bilge Ventilation Intake and Exhaust Vents

The **Bilge Ventilation Air Intake Vent** is located on the outboard side panel of the Port bridge-to-bow access steps. The **Bilge Ventilation Air Exhaust Vent** is located on the outboard side panel of the Starboard bridge-to-bow access steps. The purpose of these vents is for ventilation of the engine and generator compartments, which is discussed in the **Bilge Ventilation System Section** of this Owner's Manual. Be certain to read and have a thorough understanding of this section. It contains important information concerning the SAFE operation of your yacht. The photograph below displays the Bilge Ventilation Air Exhaust Vent. The Bilge Ventilation Air Intake Vent is identical in appearance.

Navigation Lights

The photographs below display the location of the Port, Starboard, and the Transom **Navigation Lights** and the combination Masthead/Anchor Light. The Port Navigation Light is RED, the Starboard Navigation Light is GREEN, and the transom light is WHITE. The Masthead/Anchor Light is also WHITE. The Navigation/Anchor Light switch is located at the helm station.

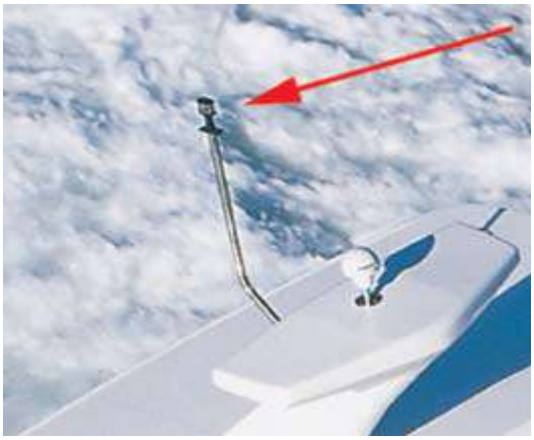

Bridge-To-Bow Access Steps

The photograph below displays the Port and Starboard **Bridge-To-Bow Access Steps**, also known as the Silverton *Sidewalk*®.

Bridge-To-Aft Deck Access Steps

The photograph below displays the **Bridge-To-Aft Deck Access Steps**, located on the Starboard side forward section of the Aft Deck.

Salon Access Door

The photographs below display the closed and open positions of the **Salon Access Door**, located on the Port side of the forward section of the Aft Deck below the Bridge. This door permits access to the main cabin of the yacht.

Shore Power Hook Up

The photograph below displays The Shore Power Cord Connection. It is located in the storage compartment in the middle of the transom above the swim platform.

Fuel Tank Fill

The Photographs below illustrate the Fuel Tank Fill Ports, located on the port and Starboard sides of transom, respectively.

INTERIOR

This section will show you the various interior compartments of your **352 MY**, starting with your entry into the Salon and then moving forward to the Forward Stateroom and then aft to the Aft Stateroom.

Salon

The photographs below display the **Salon** area of your **352 MY**; first, from the point of entry, looking forward, next, the Port view and then the Starboard view.

Galley

The photograph below displays the **Galley**, which is located on the Starboard side of your **352 MY**, forward of the Salon.

Forward Head

The photograph below displays the **Forward Head**, which is located on the Port side of your **352 MY**, aft of the Forward Stateroom. The Forward Head is accessible from both the Companionway and the Forward Stateroom.

Forward Stateroom

The photographs below display the **Forward Stateroom** as viewed upon entry forward, next, the Port side, and finally, the Starboard side.

Aft Master Stateroom

The photographs below display the **Aft Master Stateroom** as viewed Port side.

Aft Head

The photographs below display the **Aft Head**, which is accessible from the Aft Stateroom.

ENGINE COMPARTMENT

The photograph below displays the **Engine Compartment**, which is accessed through hatches located in the Salon floor.

GENERATOR COMPARTMENT

Your **352** yacht may be equipped with an optional Generator. The photograph below displays the **Generator Compartment**, which is accessed through a hatch located in the Galley floor.

BOATING SAFETY

Silverton believes your safety aboard your yacht, whether cruising or moored at your dock, is extremely important. A yacht operated in a safe manner will provide you, your passengers and other boaters many pleasurable hours of cruising and piece of mind. This section discusses the potential hazards that may be associated with boating for your awareness so they may be avoided, if possible. Be certain to read and have a thorough understanding of this section.

Silverton recommends completing a safe boating course if you are new to boating. Even if you are an experienced boater, you should consider enrolling in one of these courses as they will provide you with updated information that will prove to be valuable and enhance your cruising pleasure. Your local United States Coast Guard Auxiliary and United States Power Squadrons offer comprehensive safe boating classes several times a year. You may contact them for a course schedule in your area or the Boat/U.S. Foundation at 1-800-336-BOAT, or in Virginia, at 1-800-245-BOAT.

Safety Equipment

Important: Federal Law requires you provide and maintain certain safety equipment on your yacht. As the yacht owner, you are responsible for providing all required safety equipment. Consult the United States Coast Guard and your state and local regulations to ensure your yacht is in complete compliance with all requirements concerning safety equipment on board. Additional safety equipment may be recommended for your safety and the safety of your passengers. Be aware of its availability and specific use.

Minimum Recommended Safety Equipment

- Required life saving equipment, including life vests and throwable devices
- Required fire extinguishing equipment
- Required Visual Distress Signal Devices (Flares)
- First Aid Kit
- Emergency Position Indicating Radio Beam (EPIRB)
- Manual bailing device
- Anchor with sufficient line and/or chain
- Flashlight with fully charged batteries
- Binoculars
- VHF Radio
- Navigational charts for your cruising areas
- Fog Bell

Personal Flotation Devices (PFD's)

United States Coast Guard regulations require you to have at least one (1) approved Type I, Type II or Type III Personal Flotation Device (PFD) for each person on board. The PFD's must be of suitable size for each person aboard and must be maintained in serviceable condition and readily accessible. A minimum of three (3) PFD's (two wearable and one throwable) are required, regardless of the number of persons on board. Each of these Personal

Flotation devices, commonly known as "Life Jackets", are described as follows:

Type I (Wearable): This off-shore PFD has the greatest buoyancy. It is most effective for all waters where rescue may be delayed. Its design allows for turning most unconscious persons in the water from a face down position to a face up position, assisting in the prevention of drowning.

Type II (Wearable): This near-shore PFD provides less buoyancy than a Type I PFD. It is intended for use in calm, inland waters or waters where there is a greater chance of a quick rescue. It turns its wearer to a face up position as does the Type I PFD, but the turning action is not as pronounced. A Type II PFD may not turn as many persons to a face up position under the same conditions as would a Type I PFD.

Type III (Wearable): Classified as a flotation aid, the Type III PFD permits the wearer to place himself in a vertical or face up position, but it will not do it automatically as would a Type I or Type II PFD. The Type III PFD has the same minimum buoyancy as a Type II PFD, but it has little, or no, turning ability. It is intended for use in calm, inland waters where immediate rescue is probable. The Type III PFD is used most often by people participating in water sports, as it is generally the most comfortable type for continuous wear.

Type IV (Throwable): United States Coast Guard regulations require at least one (1) throwable Type IV PFD to be on board, regardless of the number of passengers. The Type IV PFD is not intended to be worn; it is intended to be thrown to a person who has fallen overboard and is conscious. The Type IV PFD is held by the user until rescued. The most common examples of Type IV PFD's are buoyant cushions or ring buoys and they are required to be immediately available for use and in serviceable condition.

Note: United States Coast Guard regulations for the number and type of PFD's are the minimum required. Silverton recommends exceeding the minimum requirements for your safety and the safety of your passengers.

Fire Extinguishing Equipment

As a yacht owner, you are responsible to maintain a minimum number and type of portable fire extinguishers on board. All fire extinguishers must be approved by the United States Coast Guard and be readily accessible and in serviceable condition. United States Coast Guard classification includes foam, carbon dioxide and chemical fire extinguishing materials, which are described in detail in the **Portable Fire Extinguisher System Section** of this Owner's Manual. Be certain to read and have a thorough understanding of the portable fire extinguishing equipment. United States Coast Guard minimum requirements for portable fire extinguishers maintained aboard your yacht are as follows:

- **Yachts longer than 26 feet and shorter than 40 feet:** Two (2) Type B-I or at least one (1) Type B-II portable, hand-held fire extinguisher. If your yacht has a fixed fire extinguishing system approved by the United States Coast Guard, one (1) Type B-I portable fire extinguisher is required.

- **Yachts longer than 40 feet and shorter than 65 feet:** Three (3) Type B-I or one (1) Type B-I and one (1) Type B-II portable, hand held fire extinguishers. If your yacht has a fixed fire extinguishing system ap-

proved by the United States Coast Guard, two (2) type B-I or one (1) Type B-II portable fire extinguisher is required.

Note: United States Coast Guard regulations are the minimum requirements. Silverton recommends exceeding the minimum requirements for your safety.

Fire Prevention

Fire can not only damage or destroy your new yacht, it can also be deadly. However, with a little effort on your part, fire prevention and fire safety is a very attainable goal.

As owner of your yacht, it is your responsibility to:

- Have fire fighting equipment checked at regular intervals located on the equipment.
- Replace fire fighting equipment, if expired or discharged, by devices of identical or greater fire fighting capacity.
- Inform members of the crew about:
  - the location and operation of fire fighting equipment.
  - the location of discharge openings into the engine space.
  - the location of escape hatches.
- Ensure that fire fighting equipment is readily accessible when the craft is occupied.

WARNING

Some things should NEVER be done in order to help prevent fire aboard your yacht.

- - NEVER obstruct passage ways to exits and hatches.
- NEVER obstruct safety controls, e.g. fuel valves, gas valves, switches of the electrical system.
- NEVER obstruct portable fire extinguishers stowed in lockers.
- NEVER use gas lights in your yacht.
- NEVER leave the craft unattended when cooking and/or heating appliances are in use.
- NEVER modify any of your yacht's systems especially electrical, fuel and gas).
- NEVER fill any fuel tank or replace gas bottles when machinery is running or when cooking or heating appliances are in use.
- NEVER smoke while handling fuel or gas.

Other good ways to prevent fire aboard your yacht is to keep the bilge areas clean and to check for fuel and gas vapors at regular intervals, and not to fit free hanging curtains or other fabrics in the vicinity of or above cookers or other open flame devices. Also combustible material should not be stored in the engine compartment. If non combustible materials are stowed in the engine space they shall be secured against falling into machinery and shall cause no obstruction to access in or from the space.

CAUTION Fire prevention is something that you as the yacht owner are responsible for. Too much fire prevention is not possible. This is an area that is unfortunately often overlooked by boat owners. However, as long as this area is an important part of your boating safety preparation, you can help to make your journeys safer for not only for you, but your crew and family as well.

Visual Distress Signal Devices

The United States Coast Guard requires all boats operating on the coastal waters of the United States to maintain visual distress signal equipment (flares) on board. Coastal waters are defined as all waters, except rivers, streams and inland lakes. The Great Lakes and any river mouth greater than two (2) miles wide are considered coastal waters. All boats owned in the United States and operating on the high seas are required to carry visual distress signal equipment on board.

All visual distress signal devices are required to be maintained in serviceable condition and stowed in a readily accessible location. Equipment displaying a useful service life date must be within the specified usage date shown. Both pyrotechnic and non-pyrotechnic equipment must be United States Coast Guard approved.

Pyrotechnic visual distress signal devices and their associated equipment include the following:

- Red Flares - Hand held or aerial.
- Orange Smoke - Hand held or floating.
- Launchers for aerial red meteors or para-chute flares.

Non-pyrotechnic visual distress signal devices include the following:

- Orange Distress Flag.
- Dye Markers.
- Electric Flashing Distress Light.

No single visual distress signal device is perfect for all conditions or purposes. Silverton recommends carrying various types of devices as described above. Careful selection and the proper stowage of visual distress signal equipment is extremely important. If young children are frequently aboard, you should select devices with packaging which children, but not adults, will find difficult to open.

Sound Signaling Devices

The United States Coast Guard requires all boats over 16 feet in length to have a device that is capable of producing a sound signal when conditions require. Boats greater than 26 feet and less than 39 feet, 4 inches, must have a sound signaling device that is capable of producing a four (4) second blast, which can be heard at least one-half mile away. The device may be either hand held or power operated. Boats greater than 39 feet, 4 inches must have in addition to the above sound signaling device, a whistle and a bell, which must meet or exceed the requirements of the Inland Navigational Rules Act of 1980.

Refer to the United States Coast Guard publication *"Navigational Rules, International-Inland"* for specific requirements of sound signaling devices.

Navigation Lights

The United States Coast Guard requires all boats that are operated during the hours of darkness or when visibility is impaired, be equipped with navigation lights that are illuminated. Observe all rules of navigation when meeting or passing another vessel. DO NOT operate your yacht at high speeds during night operation or when visibility is impaired. A good rule to follow is to NEVER

operate your yacht at a greater speed than that which would prevent you from stopping within the distance of your visibility.

Always use common sense and good judgement when operating your yacht at night or during restricted visibility.

Refer to the United States Coast Guard publication *"Navigational Rules, International-Inland"* for specific navigational lighting requirements.

Additional Safety Equipment

You should consider having additional equipment on board your yacht to help make your cruising experience safer and more enjoyable. Some examples of this additional equipment are as follows:

- Anchor with chain and/or line.
- Boat hook.
- Bucket and sponge.
- Commonly used spare parts, such as hose clamps, spark plugs, etc.
- Compass.
- Docking lines.
- Engine and accessory manuals.
- Extra keys.
- Extra V-belts.
- Fenders.
- First aid kit.
- Flashlight with extra batteries.
- Manually operated bilge pump.
- Navigational charts for your cruising area.
- Owner's Manual.
- Replacement light bulbs.
- Ship-to-shore radio.
- Spare fuel and oil filters.
- Spare propeller with fastening hardware.
- Tool kit.

Navigation Rules of the Road

Navigating your yacht is much the same as driving an automobile. Operating either one responsibly means complying with a set of rules intended to prevent accidents. Just as you assume other automobile drivers know the rules of the road and expect them to abide by them, other boaters assume the same of you. As a responsible yachtsman, you must comply with the **"Rules of the Road"**; the marine traffic laws enforced by the United States Coast Guard. There are two (2) sets of rules: The **United States Inland Navigational Rules** and the **International Rules**. The United States Inland Navigational rules apply to all vessels operated within the demarcation lines separating inland and international waters. The United States Coast Guard publishes the **"Rules of the Road"** in its publication *"Navigational Rules, International-Inland"*. You can obtain a copy of this publication from your local United States Coast Guard Unit or the United States Coast Guard Headquarters, 1300 "E" Street NW, Washington, D.C. 20226.

Other helpful publications available from the United States Coast Guard include, *"Aids to Navigation"* (Pamphlet #123), which explains the significance of various lights and buoys; *"Boating Safety Training Manual"*; *"Federal Requirements For Recreational Boats"*. Be certain to check with your local United States Coast Guard station, your Silverton dealer or a local marina concerning navigational aids unique to your yachting area.

It is impossible to establish rules for every type of yachting situation. Therefore, it is extremely important to use common sense and good judgement when operating your yacht. Some of the basic rules to follow are:

- Always adhere to navigational rules to avoid collisions.

- Less maneuverable boats generally have the right-of-way. Always steer clear of the Stand-on vessel (boat having the right-of-way) and pass to its stern in a crossing situation.

- If a collision appears unavoidable, **BOTH** vessels must act **IMMEDIATELY**. Prudence **ALWAYS** takes precedence over the right-of-way rules if a collision is imminent.

- **NEVER** send a **"MAYDAY"** message unless there is a serious emergency and you are in need of immediate assistance.

Be certain you understand important terminology distinctions:

Power Driven Vessel

A boat propelled by an engine, including a sailboat propelled by an engine and sails.

Sailing Vessel

A boat propelled by sail only, with no engine in operation.

Vessel Engaged In Fishing

A commercial fishing boat with apparatus that restricts its maneuverability (does not include trolling lines or other apparatus that does not restrict its maneuverability).

Vessel With Restricted Maneuverability

Any vessel, due to it size, draft or cargo, that is restricted in its ability to maneuver in a certain waterway.

Underway

Any vessel not anchored, not made fast to shore and not aground, whether or not it is under power or sail.

Basic Rules of Navigation

Power driven vessels must give the right of way to the following:

- A vessel unable to maneuver.

- A vessel whose maneuverability is restricted.

- A sailing vessel.

Sailing vessels must give the right of way to the following:

- A vessel unable to maneuver.

- A vessel whose maneuverability is restricted.

- A vessel engaged in commercial fishing.

Vessels engaged in commercial fishing must give the right of way to the following:

- A vessel unable to maneuver.

- A vessel whose maneuverability is restricted.

Basic Rules of Safe Boating

- **Drugs and/or Alcohol and Boating DO NOT Mix.** Drugs and/or alcohol decrease your reaction time, impair your judgement and inhibit your ability to safely operate your yacht. As a responsible boater, you will refrain from using drugs or alcohol (singly or combined) while you are operating your yacht. Operation of motorized vessels while under the influence of drugs and/or alcohol carries a severe penalty.

- Always maintain your yacht and its equipment in safe operating condition. Inspect the hull, engines, safety equipment and all boating accessories on a regular basis.

- Be certain lifesaving and fire extinguishing equipment is on board. This equipment must meet or exceed regulatory standards and it should be noticeable, easily accessible and in proper operating condition. Your passengers should know where this equipment is located and how to use it.

- Be certain you have sufficient fuel on board for your anticipated cruising requirements. In general, anticipate using 1/3 of your fuel supply to reach your destination and 1/3 of your fuel supply to return. Always maintain 1/3 of your fuel supply in reserve for changes in your plans due to unforeseen weather conditions or other circumstances.

- Use **EXTREME CAUTION** while fueling your yacht. Be certain you know the capacity of the fuel tank(s) and the amount of fuel you consume when operating at your normal cruising speeds. Read and have a thorough understanding of the **Fuel System Section** of this Owner's Manual. It contains valuable information and warnings that, if strictly adhered to, will enhance your yachting pleasure and safety.

- Check the weather forecast before getting underway. DO NOT venture out if the weather is, or is expected to be, threatening. While underway, always be cognizant of changing weather conditions by frequently checking the local forecast. Monitor strong winds and electrical storms closely and head for sheltered waters or your marina BEFORE they are encountered.

- Always maintain accurate, updated charts of your cruising area on board and refer to them frequently. DO NOT rely on your memory of an area. All waters, particularly tidal waters, are subject to constant changes, such as shoaling and underwater hazards.

- Always file a Float Plan with a responsible person before you depart on your cruise.

- Instruct at least one other person on board your yacht in its basic operating procedure. This person can take over the operation of your yacht if you unexpectedly become unable to do so.

- DO NOT permit your passengers to ride

on parts of your yacht that are not intended for passenger use, such as the gunwales or the bowrail.

- Ask all persons to remain seated while your yacht is in motion, particularly during inclement weather.

- DO NOT use the swim platform or boarding ladder while the engines are in operation, whether or not your yacht is in motion.

- Always maintain a good lookout. Keep away from swimmers, divers and waterskiers. They should display a flag when engaged in these types of water sports, but DO NOT rely upon it; if you suspect that type of activity, it is best to avoid that area, if possible.

- Understand and obey the "Rules of the Road".

- Understand and obey all local boating laws.

- Always maintain complete control of your yacht.

- Finally, ALWAYS operate your yacht with care, courtesy and common sense.

Voluntary Safety Inspections

The United States Coast Guard Auxiliary and boating officials in many states offer courtesy safety inspections of your yacht at no charge to you. They will examine your yacht for compliance with all safety standards and required safety equipment. You may voluntarily consent to one of these inspections and you are given sufficient time to make necessary corrections without fear of prosecution for any discrepancies found. Contact your local United States Coast Guard Auxiliary or appropriate state agency for details concerning these courtesy safety inspections.

Carbon Monoxide Safety

DANGER **Carbon Monoxide Gas (CO) is colorless, odorless and tasteless. It is highly poisonous, endangering lives even at very low levels of concentration. Mild exposure causes headaches and fatigue, often resembling "flu-like" symptoms. Medium exposure causes severe headaches, drowsiness, nausea and rapid heart rate. Extreme exposure results in unconsciousness, convulsions, cardiorespiratory failure and death. If Carbon Monoxide Gas (CO) is detected in your yacht, immediately contact a qualified technician to locate and repair the source of the poisonous gas. DO NOT enter your yacht until repairs have been made and the Carbon Monoxide Gas (CO) is lowered to an acceptable level.**

Carbon Monoxide Gas (CO) inhaled into the lungs combines with the blood to reduce the ability to carry oxygen. Reducing the amount of oxygen to the body tissue results in death of the tissue. The presence of Carbon Monoxide Gas (CO) requires the yacht operator's special and immediate attention. Carbon Monoxide Gas (CO) in high concentrations is fatal within minutes. The effects of lower concentrations are cumulative and can be as lethal as high concentrations.

The symptoms of excessive exposure to Carbon Monoxide Gas (CO) concentrations may include watery and itchy eyes, throbbing temples, ringing in the ears, inat-

tentiveness, headache, nausea, dizziness and drowsiness.

Certain health problems, such as lung disorders or heart problems and age will increase the effects of Carbon Monoxide Gas (CO) as does consuming alcohol or high concentrations of tobacco smoke.

Many variables affect Carbon Monoxide Gas (CO) accumulation. Among these are the following:

- Yacht layout and configuration
- Location of hatch, window, door and ventilation openings
- Location of structures and other boats
- Wind direction
- Vessel speed

This Owner's Manual cannot identify or describe every possible variable or combination of variables that may affect the accumulation of Carbon Monoxide Gas (CO). The yacht operator must remain aware at all times of the possibility of its accumulation, the prevention of its accumulation and the appropriate action to be taken if it is detected.

Be certain to read and have a thorough understanding of the **Carbon Monoxide (CO) Detector System Section** of this Owner's Manual. It contains valuable information and warnings for you and your passengers' safety.

The following illustrations show how Carbon Monoxide Gas (CO) can accumulate in your yacht while either at your dock or underway. Become familiar with these examples and their precautions to prevent exposure to this poisonous gas.

DANGER **Blocked hull exhaust outlets near a pier, dock, seawall, bulkhead or any other structure can cause excessive accumulation of Carbon Monoxide Gas (CO) within the cabin areas of your yacht. Be certain hull exhaust outlets are not blocked in any way.**

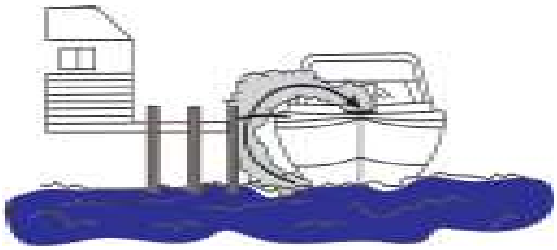

DANGER **Engine and generator exhaust from other vessels alongside your yacht, while docked or anchored, can cause excessive accumulation of Carbon Monoxide Gas (CO) within the cabin and cockpit areas of your yacht. Be alert for exhaust from other vessels.**

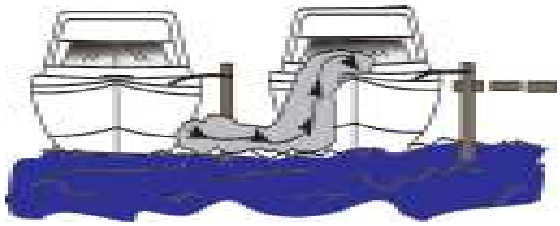

DANGER **When protective weather coverings are in place, engine or generator exhaust from your yacht, while docked, at anchor, drifting or underway can cause excessive accumulation of Carbon Monoxide Gas (CO) within the cabin and cockpit areas of your yacht. Always provide adequate ventilation when the weather coverings are in place and either the engine or the generator are running.**

DANGER **Engine or generator exhaust from your yacht while underway at a slow speed can cause excessive accumulation of Carbon Monoxide Gas (CO) within the cabin and cockpit areas of your yacht. A tail wind can increase the accumulation. This is often referred to as the "Stationwagon Effect". Always provide adequate ventilation or increase your speed, if possible.**

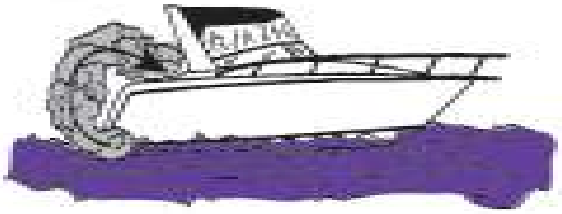

DANGER **Engine or generator exhaust from your yacht while underway and operating with a high bow angle can cause excessive accumulation of Carbon Monoxide Gas (CO) within the cabin and cockpit areas of your yacht. Always provide adequate ventilation and redistribute the load to lower the bow angle.**

Fuel Safety

DANGER **Gasoline and Diesel Fuel are extremely flammable. Proper handling is necessary to provide for the safety of you and your yacht.**

- DO NOT smoke while fueling.
- Make sure that all accessories, both engines, and generator are turned off before beginning to fuel your yacht.
- When fueling your yacht in warm weather, allow for expansion of the fuel and do not top off the fuel tanks. The tanks may overflow when the fuel expands after being pumped out from cool, underground tanks or when the air temperature is cool, such as early morning or evening.
- Always handle fuel with care.
- Never store fuel in portable containers aboard your yacht.

REFER TO FUEL SYSTEM ON PAGE 71 FOR ADDITIONAL FUEL SAFETY INFORMATION.

EMERGENCY SITUATIONS

Swamped or Capsized Yacht

If your yacht becomes swamped or capsizes, immediately put on a PFD and set off a visual distress signal. A swamped or capsized yacht will normally stay afloat. DO NOT leave your yacht or attempt to swim to shore, except under extreme conditions, such as fire or explosion. A capsized yacht is much easier to see by a potential rescuer than a person swimming, resulting in a greater chance of rescue. If you attempt to swim to safety, the shore may be farther away than it appears and you may tire and not be able to reach your destination, resulting in possible drowning.

Hypothermia

If a person falls overboard or is in the water due to a swamped or capsized yacht, hypothermia may be an immediate concern. Hypothermia exists when the body loses heat faster than it can replace it. If not rescued within a short period of time, the person will become exhausted and likely drown. In general, the colder the water, the shorter the time for survival. If the person is wearing a PFD, it will greatly increase his survival time as they act as an insulator and will also keep the person afloat even if he is unconscious.

Collision

If a collision occurs, the following procedure should be strictly adhered to:

- Be certain all passengers put on their PFD. If a passenger is unable to put on his own PFD due to a disabling injury, assist him.

- Examine all persons on board for any injuries and administer first aid, if necessary.

- If your yacht has a VHF radio, contact the United States Coast Guard and any other potential rescue vessel and advise of your situation and location. VHF radio contact may be made on Channel 16 and Citizen's Band (CB) radio contact may be made on Channel 22.

- Inspect your yacht to determine the extent of damage and its potential for sinking.

- Prepare to assist the other craft and its passengers, if possible.

- If the collision resulted in penetration of your hull, prepare to quickly plug the fracture with a spare life jacket or bunk cushion once the vessels are separated.

- Before plugging the fracture, trim the yacht to place the damaged section above the water level.

- Remain with your yacht until assistance arrives.

Running Aground

- If your yacht runs aground, examine everyone on board for injuries and render first aid, if necessary.

- Examine your yacht for damage to the hull and running gear. If no serious damage is noted, attempt to free the yacht by shifting weight to the bow to raise the stern and then reverse the engines and back out of the shallow water into deeper water.

- If towing is necessary, DO NOT attach

the tow line to the deck cleats. They are not designed to take the full load of the yacht under pressure.

Silverton recommends using a commercial towing service for your safety and to decrease the potential for additional damage to your yacht as a result of removing it from the underwater obstruction.

WARNING **NEVER attach a tow line to a deck cleat or anchor windlass. The cleat or windlass may pull free from the deck and cause serious personal injury or property damage.**

Hazardous Weather Conditions Storms

Storms rarely appear without some advance warning. Check the local weather forecast before you leave port, but be aware that weather conditions can change rapidly. If you have a VHF radio, listen to the continuous weather reports issued by the National Weather Service. If you have a portable radio, keep it tuned to a station that broadcasts frequent weather reports. If you are tuned to an AM frequency, listen for static; it often means an electrical storm is approaching. Many boating clubs fly weather signals in the form of flags or lights. Learn to recognize these signals.

Your surroundings can also be a good indicator of changing weather conditions. Watch for changes in wind direction or cloud formations. There is no substitute for a good understanding of typical weather conditions and what to do when it takes a turn for the worse.

Fog

Fog is the result of either cold air passing over a warm earth surface or warm air passing over a cold earth surface. You can judge the likelihood of fog formation by periodically measuring the air temperature and the Dew Point temperature (temperature at which moisture in the air will develop), which is given during a normal weather forecast. If the difference between these two temperatures is small, fog is likely to develop. Always remember the following guidelines if you encounter fog conditions:

- Unless your yacht is well equipped with charts, head for shore at the first sign of fog and wait until conditions improve before continuing your cruise. If you have charts on board, take your present location bearings as the fog sets in, mark your position and continue to log your course and speed.

- **REDUCE YOUR SPEED.**

- Be certain all persons on board are wearing their PFD.

- Station a person forward as a lookout.

- Sound your horn or fog bell at the appropriate intervals to warn other vessels of your presence. Refer to the *"Rules of the Road"* for information concerning the proper duration and interval of the fog signal.

- Listen for fog signals from other vessels and be aware of their presence. If possible, determine their proximity to your yacht, but remember, sound carries a long distance over water and can be deceiving.

- If there is any doubt concerning the safety of continuing your excursion, anchor your

yacht. Listen for other fog signals while continuing to sound your fog bell or horn. Continue your cruise when conditions improve.

Fire

Fire aboard your yacht is always serious, but it can usually be brought under control if you are prepared and act quickly. Fire extinguishers required by the United States Coast Guard are the minimum necessary. Silverton recommends exceeding the minimum requirements by placing additional fire extinguishers where they may be needed. Inspect all fire extinguishing equipment frequently and review emergency plans on a regular basis.

As a yacht owner, you should develop a **Fire Response Plan** and familiarize all passengers with this plan before departing on your cruise. The Fire Response Plan will identify the type of fire you may encounter and the appropriate reaction to quickly extinguish it before it gets out of control. Having a Fire Response Plan in place and the assignment of certain responsibilities to your passengers will result in faster and more accurate decisions and reactions in the event of a fire aboard your yacht.

Important: All passengers on board your yacht should know the location of your fire extinguishers and be familiar with their use.

In the event a fire does start aboard your yacht, follow these guidelines:

- If you detect a fire or suspect a fire aboard your yacht, immediately turn OFF your engines and electrical power supply. DO NOT turn OFF power to your VHF radio.

- Be certain all persons on board put on their PFD.

- If the fire is in the engine/generator compartment, DO NOT open the hatch. The fire will flare with the sudden introduction of fresh air.

- If you are able to get to the source of the fire, aim your fire extinguisher at the base of the flames and use a sweeping action to extinguish it. Concentrating your fire extinguisher in one location may cause the fire to spread.

- If the fire becomes out of control, send a distress signal and call for assistance on your VHF radio. Be certain to provide any potential responders with your location and a description of your situation.

- Deciding whether to stay on board your yacht or abandon ship may be difficult and depends on the extent of the fire and the weather conditions. If you decide to abandon ship, all persons on board should jump, not dive, overboard and swim a safe distance away from the burning yacht. Be certain all persons stay together after abandoning ship.

Be certain to read and have a thorough understanding of the **Portable Fire Extinguisher System Section** and the **Automatic Fire Extinguisher System Section** of this Owner's Manual. They contain valuable information and warnings for your safety.

Prevention is the safest and most effective method of fighting fire aboard your yacht. Always follow these guidelines:

- Use extreme caution and refrain from smoking while fueling your yacht.

- Use only marine safety approved cooking and heating systems and follow the manufacturer's directions concerning their operation.

- Open flames demand constant attention. DO NOT leave any open flame unattended.

- Ensure ventilation systems are unobstructed.

- Always provide adequate ventilation when cleaning and painting.

- Use extreme caution when using liquefied petroleum gas (LPG) or compressed natural gas (CNG). Close valves to cylinders and supply lines when not in use.

- Operate exhaust blower motors at least five (5) minutes before starting the engines or generator.

- Use your sense of smell to check for fumes in the bilge and engine/generator compartment before starting engines or generator.

- Always store flammable material in approved containers and in a locker sealed from the interior of your yacht and vented overboard.

- Remove the canvas enclosure, at least partially, before starting engines.

- Ensure there are no leaks in any fuel system, including LPG/CNG.

- Extinguish smoking materials carefully. Check cleaning materials for flammability and store as you would any flammable material.

- Always disconnect electrical power before performing any maintenance on electrical appliances.

- Always replace electrical breaker switches or fuses with the same recommended amperage. NEVER exceed the recommended amperage.

- Electrical service to your yacht should only be performed by a qualified marine electrical technician.

AIR CONDITIONING/HEATING SYSTEM (OPTIONAL)

The factory installed **Air Conditioning/ Heating System** in your **352 MY** is purchased as an option from your Silverton dealer. The purpose of this system is to maintain a comfortable cabin temperature and humidity level, regardless of ambient temperature and humidity. Each air conditioning/heating unit in your **352 MY**, which operates on the A/C electrical system, is self-contained and manufactured by *Marine Air Systems*. The system is then installed at the Silverton factory according to the specific option plan you chose at the time of the purchase of your **352 MY** . The two (2) **Air Conditioning/Heating System** option plans are described as follows:

23,000 BTU Total Capacity

This system utilizes two (2) self-contained air conditioning units. The **Forward Unit,** having a capacity of 16,000 BTU's, is located under the cabinet in the galley and cools/heats the forward cabin, forward head, galley and the salon. The **Aft Unit,** rated at 7,000 BTU's, is located under the aft cabin bunk and cools/heats the aft cabin and aft head.

25,000 BTU Total Capacity

This system utilizes two (2) self-contained air conditioning units. The **Forward Unit**, having a capacity of 16,000 BTU's, is located under the cabinet in the galley and cools/heats the galley and salon. The **Aft Unit**, having a capacity of 9,000 BTU's, is located under the aft cabin entry steps and cools/heats the aft cabin and aft head.

Each air conditioning unit is controlled by an independent thermostatic control panel ("Passport Control"), which is located within the respective cooling/heating zones. The desired zone temperature is manually set on the "Passport Control" and the air conditioning unit is activated to supply cooling or heating as required to constantly maintain the temperature selected.

Each air conditioning unit will operate in a **"Dehumidification"** mode upon demand and is controlled by the "Passport Control". Refer to the *Marine Air Systems* Operation and Maintenance Manual for a complete description and instruction in the operation of this mode.

Operation of the **Air Conditioning/Heating System** in your **352 MY** is as follows:

- Turn ON the respective air conditioner breaker switch, located on the AC/DC Electrical Panel (See **AC/DC Electrical Panel Layout** on Page 153, which illustrates the location of the respective breaker switches).

- Make sure seawater intake is open and seawater pump is operating properly.

- Refer to the *Marine Air Systems* Operation and Maintenance Manual for a detailed description of the function of each button located on the "Passport Control".

- Air Conditioning drains into shower sump. Make sure shower sump circuit breaker is turned on when operating Air Conditioning.

- Turn ON the power button, located on the respective air conditioning unit "Passport Control".

- Press the fan speed button on the "Passport Control" until the desired speed is obtained.

- Press the appropriate temperature control button (Down/Up) to obtain the desired temperature.

Only certified and trained service technicians should perform maintenance of your **Air Conditioning/Heating System**. Contact your Silverton dealer for general maintenance and winterization of the system on your **352 MY**. Untrained persons may carefully perform routine maintenance, such as the cleaning of filters and the exterior surfaces of the condensing coils.

REFER TO THE *MARINE AIR SYSTEMS* OPERATION AND MAINTENANCE MANUAL FOR TECHNICAL INFORMATION CONCERNING YOUR **AIR CONDITIONING / HEATING SYSTEM.**

TYPICAL A/C SYSTEM

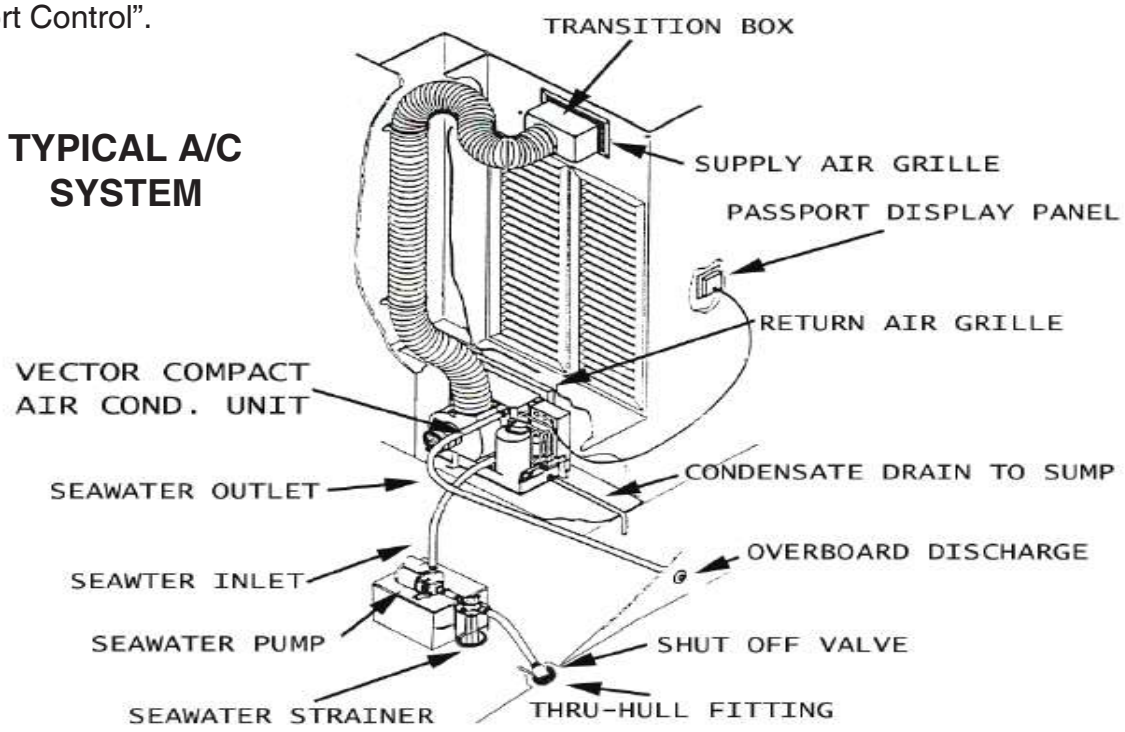

ANCHOR SYSTEM

The purpose of the **Anchor System** is to make fast your yacht to the ground surface below the water level. You may want to anchor your yacht for a variety of reasons, such as an overnight stay in a harbor, stationary fishing or, if your yacht becomes disabled, to remain in one identifiable location until assistance arrives. The equipment used in anchoring your yacht, also known as "ground tackle", is as follows:

- Anchor
- Anchor Chain or Line (Rode)
- Anchor Chock
- Anchor Cleat
- Anchor Safety Chain
- Anchor Windlass (Optional)
- Rope Locker
- Scope

Anchor

Your **352 MY** is equipped with a "Danforth" type anchor, weighing 18 pounds. This universal type of anchor is very efficient for a variety of bottom surfaces.

Anchor Chain or Line (Rode)

The Anchor Rode on your **352 MY** may be chain, rope or a combination of both and, depending on the option you selected when you purchased your yacht from your Silverton dealer, the length is as follows:

Standard Equipment: Three hundred (300) feet of nylon rope, 5/8 inch in diameter.

Optional Windlass Equipped (Standard): Fifteen (15) feet of chain coupled to one hundred fifty (150) feet of nylon rope, 5/8 inch in diameter.

Optional Windlass Equipped (Optional): Three hundred (300) feet of chain.

Anchor Chock

The Anchor Chock on your **352 MY** is located on the underside of the bow pulpit and supports the anchor while it is not in use (See photograph below, which illustrates the location of the **Anchor Chock**).

Anchor Cleat

Your **352 MY** is equipped with an Anchor Cleat and its purpose is to secure the anchor line after the anchor is set. If your **352 MY** is equipped with an optional anchor windlass, the anchor cleat will also eliminate unnecessary pressure on the windlass clutch and maintain the proper "scope" (length of released anchor rode) in the event of windlass failure. If your **352 MY** is not equipped with an optional anchor windlass, the anchor cleat is located aft of the anchor in the recessed walkway. If your **352 MY** is equipped with an optional anchor windlass, the anchor cleat is located between the anchor and the anchor windlass in the recessed walkway (See photograph on Page 48, which illustrates the location of the **Anchor Cleat**).

Anchor Safety Chain

The Anchor Safety Chain on your **352 MY** secures the anchor in its normal mounted position, preventing it from falling in the event the anchor windlass becomes disengaged, allowing the chain/rode to slip.

Anchor Windlass (Optional)

Your **352 MY** may be equipped with an optional power Anchor Windlass, which is located in a recessed well in the forward portion of the deck immediately to the rear of the anchor. The purpose of the Anchor Windlass is to assist in lowering and raising the anchor with a minimum of manual effort. The Anchor Windlass operates on DC electrical power and may be operated from either the helm station or foot controls, which are located on the deck adjacent to the windlass. Be certain the Anchor Windlass breaker switch and the battery switch are turned to the ON position. The helm station control consists of a manual rocker-type switch, located on the helm switch panel (See **Helm Panel Layout** on Page 158, which illustrates the location of the anchor windlass switch). The foot controls, located adjacent to the Anchor Windlass, consist of two (2) foot depressed switches: the RED switch lowers the anchor; the GRAY switch raises the anchor (See photograph below, which illustrates the location of the **Anchor Windlass**, the foot depressed control switches, the **Anchor Cleat** and the **Rope Locker**).

Rope Locker

Your **352 MY** is equipped with a Rope Locker, which is located on the Starboard side of the recessed walkway immediately aft of the anchor. The purpose of the Rope Locker is to store the anchor rode in a convenient location removed from the deck surface. The Rope Locker is accessed by a hatch, which covers the locker and prevents you or your passengers from accidental falls into the storage well (See previous photograph, which illustrates the location of the **Rope Locker**).

Scope

Scope is defined as the ratio of the length of the anchor rode to the vertical distance from the anchor chock to the bottom surface (water depth plus the height of the anchor chock above the water). Under favorable current, tidal and weather conditions, a Scope ratio of 8:1 is considered satisfactory. If the rode is chain, the ratio may decrease to 5:1 under the same favorable conditions. It may be necessary to increase the Scope ratio under unfavorable weather conditions, such as severe wind and tidal currents, to hold your yacht fast to the bottom.

EXAMPLE:

Water Depth: Ten (10) feet.

Height of Anchor Chock Above Water: Seven (7) feet (Approximate height of your **352**).

Required Length of Anchor rode for 8:1 Ratio: 136 feet.

The procedure to properly anchor your **352 MY** is as follows:

- Slowly approach your desired anchorage from downwind and against the current, if possible.

- Stop all forward motion of your yacht and lower the anchor after releasing the safety chain.

- When the anchor touches the bottom, release sufficient anchor rode to the desired scope ratio while slowly operating your yacht in reverse.

- Affix the anchor rode to the anchor cleat and "set" the anchor into the bottom.

- Adjust your scope ratio as needed to completely secure your yacht.

The procedure to properly release your **352 MY** from its anchorage is as follows:

- Release the anchor rode from the anchor cleat.

- If your **352 MY** is not equipped with an optional anchor windlass, retrieve the anchor rode in a hand-over-hand manner until the anchor breaks free of the bottom.

- If your **352 MY** is equipped with an optional anchor windlass, depress the rocker-type switch marked "Windlass" to retrieve the anchor rode and raise the anchor. If operating the windlass from the foot-depressed switches, depress the GRAY switch to raise the anchor.

- Continue retrieving the anchor rode until the anchor breaks free of the bottom.

- Raise the anchor to its normal resting position in its anchor chock.

- Secure the anchor safety chain to prevent accidental release of the anchor.

⚠ CAUTION **In extreme wind and current conditions, excessive force may be applied to the anchor windlass while retrieving the anchor rode, which could result in damage or failure of the unit. Avoid this excessive force by operating your yacht slowly forward while retrieving the anchor rode with the windlass operated from the helm control. Be certain to maintain tension on the anchor rode while retrieving to allow proper operation of the windlass. Once the anchor is free from the bottom, cease forward motion of your yacht.**

AUTOMATIC FIRE EXTINGUISHER SYSTEM

Your **352 MY** is equipped with a *SEA-FIRE* Model BB-400 **Automatic Fire Extinguisher System**, which is permanently mounted on the forward bulkhead of the engine compartment (See **Mechanical Layout** on Page 155 and 156, which illustrates the location of this fire extinguishing system). The **Automatic Fire Extinguisher System (AFE)** is designed for use in enclosed compartments that are not normally occupied by passengers and are not normally subject to weather or water exposure. The *SEA-FIRE* Model BB-400 automatic fire extinguisher is designed to extinguish Class B fires (flammable liquids) and Class C fires (electrical), which would be the type that would normally occur within the confined area of the engine/generator compartment.

NOTE: The *SEA-FIRE* Model BB-400 automatic fire extinguisher system DOES NOT replace the need for additional portable-type fire extinguishers required by the United States Coast Guard. Refer to the **Boating Safety Section** of this Owner's Manual for the type and quantity of portable fire extinguishers required for your **352 MY**.

The *SEA-FIRE* Model BB-400 automatic fire extinguisher is activated when the engine/generator compartment reaches 165° Fahrenheit/74° Celsius. The system releases HALON 1301 into the compartment, which immediately converts to a safe, odorless and electrically non-conductive vapor that will not harm the components in the engine/generator compartment. In contrast to other fire extinguishing materials, HALON 1301 leaves no residue, assisting in the eventual cleaning of the compartment.

The *SEA-FIRE* Model BB-400 automatic fire extinguishing system on your **352 MY** is equipped with a GREEN indicator light, located on the helm switch panel (See **Helm Switch Panel Layout** on Page 158, which illustrates the location of the Halon System indicator light). The purpose of this indicator light is to alert the operator of the charge/discharge status of the **Automatic Fire Extinguishing System**. The indicator light will illuminate when the ignition switch is turned to the ON position if the system is fully charged. If the indicator light fails to illuminate after turning on the ignition switch, carefully examine the exterior of the engine/generator compartment for evidence of a fire that may have discharged the system by looking for signs of "scorching" and by your sense of smell.

WARNING **If the Green indicator light does not illuminate after turning on the ignition switch or if it turns off at any time during operation of your yacht, either at dockside or while underway, DO NOT open the engine compartment for at least ten (10) minutes. Opening the engine compartment immediately will allow air to enter and may cause a fire "flashback", possibly resulting in serious injury or death. The sudden rush of air into the engine compartment may also render the automatic fire extinguishing system ineffective.**

If you do not observe or smell any evidence of a fire and you have waited the recommended ten (10) minutes, open your engine compartment and examine the Halon 1301

container actuator to determine if it has been discharged. Refer to the *SEA-FIRE* Manual, which illustrates the charged and discharged positions of the actuator. If the system has been discharged or appears charged, but the indicator light does not illuminate, see your Silverton dealer for further inspection and repair, if necessary.

In the event of an engine/generator compartment fire, the following steps should be taken to avoid the likelihood of personal injury or death and to minimize property damage:

- Remain calm and avoid panic.

- Immediately turn OFF all electrical power, including the engine ignition and the engine compartment ventilation blowers.**NOTE:** DO NOT turn OFF power to your VHF radio.

- **DO NOT** open the engine/generator compartment for at least ten (10) minutes to allow the Halon 1301 vapor to extinguish the fire.

- Remove your portable fire extinguisher from its mounting bracket and prepare it for use, if necessary.

- Instruct all passengers to put on their Personal Flotation Devices (PFD's) and move away from the source of the fire.

- Contact the United States Coast Guard on your VHF radio and advise of your situation and location. Maintain radio contact until the crisis has ended and assistance has arrived.

- If the fire is successfully extinguished, examine the engine compartment components for damage. DO NOT restart your engines if any damage is noted. Request towing assistance to a safe harbor and contact your Silverton dealer for a thorough inspection and repairs.

- When replacing parts of the fire fighting instillation only matching components shall be used, bearing the same designation or being equivalent in their technical and fire resistant capabilities.

REFER TO THE *SEA-FIRE* MANUAL FOR A DETAILED DESCRIPTION OF YOUR **AUTOMATIC FIRE EXTINGUISHER SYSTEM**. BE CERTAIN TO COMPLETE THE *SEA-FIRE* WARRANTY CARD AND MAIL TO THE MANUFACTURER WITHIN 10 DAYS OF YOUR PURCHASE.

BILGE PUMP SYSTEM

The purpose of the **Bilge Pump System** is to remove any water that may accumulate within the bilge area of your yacht (a nominal amount of water in the bilge area is normal). The bilge area is defined as the interior area of the hull below the designed waterline. Your **352 MY** is equipped with two (2) *Mayfair* bilge pumps that are capable of pumping 1250 gallons of water per hour. The bilge water is pumped overboard through hull fittings located on the side of the hull above the waterline (See **Thru-hull Layout** on Page 151, which illustrates the location of the bilge pump discharge ports).

Location of the bilge pumps is as follows (See **Mechanical Layout** on Page ?, which illustrates the location of the bilge pumps):

- One bilge pump forward
- One bilge pump aft

Normal operation of the bilge pumps is automatic. Each bilge pump is equipped with a float-type switch that will automatically activate the pump when the bilge water reaches a certain level. The automatic switches are connected directly to the batteries and will operate even if the battery switch is turned OFF. Each of the bilge pumps can also be activated manually by individual switches located on the AC/DC Electrical Panel (See **AC/DC Electrical Panel Layout** on Page 159, which illustrates the location of the manual bilge pump switches). The bilge pump will operate continuously until the manual switch is turned OFF. The battery switch must be turned ON to operate the bilge pumps manually.

Periodic maintenance of the bilge pumps should consist of the following:

Visually inspect each bilge pump for any debris that may have accumulated. Remove any debris noted.

Manually test each bilge pump by activating the manual switches located on the AC/DC Electrical Panel. Listen to each bilge pump as it is manually activated. They should emit a quiet “whirring” sound. If any abnormal sounds are noted, contact your Silverton dealer for further inspection and replacement, if necessary.

IMPORTANT: After testing each bilge pump by turning ON the manual switches, be certain they are turned OFF. The constant operation of the bilge pumps will eventually discharge the batteries.

BILGE VENTILATION SYSTEM

WARNING **The engine and generator (if so equipped) compartments on your 352 MY are enclosed areas and are subject to the accumulation of dangerous fuel fumes. If these fumes are not ventilated or properly exhausted from the engine/generator compartment, they may be ignited, resulting in fire or explosion and possible injury or death.**

Your **352 MY** is equipped with an air intake vent, located on the port side of the vessel and an air exhaust vent, located on the starboard side (See adjacent photographs, which illustrate the location of these vents). Ventilation through the port side intake vent is natural and exhaustion of the ventilating air through the starboard side vent is created by the use of two (2) bilge blowers, located in the engine compartment (See **Mechanical Layout** on Page 155 and 156, which illustrates the location of the bilge blowers).

Bilge Ventilation Intake Vent (Port Side)

Bilge Ventilation Exhaust Vent (Starboard Side)

Operation of the bilge blowers is as follows:

- The battery switch must be turned to the ON position (See photograph on Page 61, which illustrates the location of the battery switch).

- The bridge electrical breaker switch must be turned ON (See photograph of **AC DC Panel** on Page 159, which illustrates the location of the bridge electrical breaker).

- Depress the blower motor switch, located on the helm switch panel (See **Helm Switch Panel Layout** on Page 158, which illustrates the location of the blower motor switch). The small light located on the blower switch will illuminate to indicate the blower motors are in operation.

To reduce the risk of fire or explosion within the engine/generator compartments of your **352 MY**, the bilge blower motors should ALWAYS be operated under the following conditions:

- Operate the blower motors for a minimum of five (5) minutes prior to starting the engines or generator.

- Operate the blower motors for a minimum of five (5) minutes after fueling your yacht before restarting your engines.

- Operate the blower motors continuously while your yacht is travelling less than cruising speed.

General maintenance of the bilge blower motors is minimal, as they are sealed units. If they fail to operate after being turned on, make sure all breaker switches are turned ON. If the blower motors still fail to operate, check the in-line fuse located on the electrical input line adjacent to the blower motor. If the fuses are in operable condition and the blower motors do not operate, contact your Silverton dealer for further inspection or replacement, if necessary.

BONDING SYSTEM

The purpose of the **Bonding System** is to protect your yacht's underwater components from electrolysis and galvanic corrosion. Examples of underwater components would be the propellers, propeller shafts, rudders, engine/generator seawater intake valves and any other metallic parts that may come in contact with seawater.

Electrolysis and galvanic corrosion occurs primarily in salt water, but can occur to a lesser degree in fresh water. Salt water allows electric current to flow from anodic to cathodic material. Any two metals from two components and their relative positions in the galvanic rating table will determine which metal loses material (anode) and which metal remains largely undisturbed (cathode). The distance apart on the galvanic table of the two metals determines the rate of wear. To help prevent corrosion, sacrificial zinc anodes are fitted to the underwater components of your yacht, such as the propeller shafts and rudders. A large sacrificial zinc anode plate is also attached to the underwater area of the transom (See photographs on Page 19 and 20, which illustrate the location of the zinc anodes). The purpose of these sacrificial zinc anodes is to attract any destructive electrical currents away from the metallic underwater components, thereby preventing their eventual corrosion and allowing the corrosion of the sacrificial zinc anodes. The sacrificial zinc anodes are considerably easier and cheaper to replace and their deterioration will not affect the performance of your yacht, as would the deterioration of a propeller or rudder.

The Bonding System is a network of wires (color coded green) that are connected to all metallic underwater components within the interior of the hull, which makes them one unit for electrical current purposes. This network of wires is then attached to the sacrificial zinc anode located on the transom, which allows corrosion of the anode, but prevents corrosion of the underwater components.

General maintenance of the Bonding System consists of yearly replacement of the sacrificial zinc anode located on the transom and all other zinc anodes located on the propeller shafts, rudders, etc. and should be completed during the spring launch procedure. The anodes may require more frequent replacement, depending on your docking location and the length of your boating season. If possible, check the anodes for excessive corrosion midway through your boating season. If excessive corrosion is noted, have your dealer or a competent technician replace the sacrificial zinc anodes. Periodically check the wiring connections to make sure they are tight and free of corrosion. Tighten and clean connections as necessary.

NOTE: Silverton recommends placing sacrificial zinc anodes on the following components:

- Propeller shafts
- Rudders
- Trim Tabs

IMPORTANT: DO NOT paint any of the sacrificial zinc anodes as it will retard the flow of electric current through them and render them ineffective.

CARBON MONOXIDE (CO) DETECTOR SYSTEM

DANGER **Carbon Monoxide Gas (CO) is colorless, odorless and tasteless. It is highly poisonous, endangering lives even at very low levels of concentration. Mild exposure causes headaches and fatigue, often resembling "flu-like" symptoms. Medium exposure causes severe headaches, drowsiness, nausea and rapid heart rate. Extreme exposure results in unconsciousness, convulsions, cardiorespiratory failure and death. If Carbon Monoxide Gas (CO) is detected in your yacht, immediately contact a qualified technician to locate and repair the source of the poisonous gas. DO NOT enter your yacht until repairs have been made and the Carbon Monoxide Gas (CO) is lowered to an acceptable level.**

Your **352 MY** is equipped with three (3) *SAFE-T-ALERT* Carbon Monoxide Gas (CO) detector monitors, which are located within the interior as follows (See photographs below, which illustrate the location of the CO monitors):

- Forward Stateroom
- Salon
- Aft Stateroom

Each CO monitor is operated by DC electrical power and they are connected directly to the batteries. It is not necessary for the battery switch to be turned ON for them to operate.

Operation of the CO monitors requires a ten (10) minute warm-up period, during which time, the sensor element is cleaned and the unit is stabilized. During this ten minute warm-up period, the GREEN indicator light will flash ON and OFF. The GREEN indicator light will remain ON after the completion of the warm-up period until the presence of Carbon Monoxide Gas is detected. If the GREEN indicator light does not illuminate, check all wiring connections and clean and tighten, if necessary. If the GREEN indicator light still fails to illuminate, contact your Silverton dealer for inspection and replacement. DO NOT attempt to make any repairs to the unit(s) yourself.

When Carbon Monoxide Gas is detected by the CO monitor, the following visual and audible signals will appear:

Low CO Warning

YELLOW flashing indicator light accompanied by a "BEEP" sound every five (5) minutes. The YELLOW indicator light will continue to flash until the presence of CO has lowered to an acceptable level. If the CO level has not been lowered to an acceptable level, an alarm will sound in approximately fifteen (15) minutes. Contact a qualified technician to locate and repair the source of the Carbon Monoxide Gas and DO NOT enter your yacht until repairs have been made and the CO has been brought to an acceptable level.

CO Alarm

RED flashing indicator light accompanied by a pulsed alarm sound. This indicates the presence of a dangerous level of Carbon Monoxide Gas and **IMMEDIATE ACTION IS REQUIRED**.
Contact a qualified technician to locate and repair the source of the Carbon Monoxide Gas and DO NOT enter your yacht until repairs have been made and the CO has been brought to an acceptable level. After depressing the "Reset" switch, the RED indicator light will continue to flash and the alarm will produce a "BEEP" sound every thirty (30) seconds until the CO is lowered to the **Low CO Warning** level. If the CO is not lowered to this level, the pulsed alarm will resound in approximately six (6) minutes. The **Low CO Warning** alarm will activate if the Carbon Monoxide Gas is lowered to the low concentration level.

CO Monitor Malfunction

Indicator light flashes alternating RED/GREEN accompanied by a "BEEP" sound every fifteen (15) seconds. Depressing the "Test/Reset" switch will not discontinue the visual and audio signal. See your Silverton dealer for inspection and replacement of the unit(s), if necessary.

Maintenance of your CO monitors is as follows:

- Test each monitor after removing your yacht from storage, prior to departing on each cruise and on a weekly basis. Refer to the *SAFE-T-ALERT* User's Manual included with your owner's packet for the proper test procedure.

- Frequently observe the color of the indicator light on each CO monitor and during testing to be certain the light is functioning properly.

- Vacuum the dust off the CO monitor cover with the brush attachment of your vacuum cleaner at least once a year and more frequently if your yacht is maintained in a dusty climate.

- Frequently clean the CO monitor cover with a damp cloth to remove all dirt and grease that may accumulate. Dry with a soft, dry cloth.

- DO NOT spray cleaning agents or waxes directly onto the CO monitor cover.

REFER TO THE *SAFE-T-ALERT* USER'S MANUAL FOR ADDITIONAL TECHNICAL INFORMATION CONCERNING THE USE AND MAINTENANCE OF YOUR CO MONITORS.

ELECTRICAL SYSTEM

This section describes the various components of the Electrical System on your **352 MY** and also includes a Trouble Shooting Guide for your convenience.

Power Systems Operation Procedures Batteries

The DC Electrical System obtains its source of power from two (2) batteries, located in the engine compartment. The negative terminal of each battery is attached to a grounding stud on each engine. This is known as a “negative ground system” and is the approved system for marine DC electrical systems. The battery wiring system has two color-coded wires. The yellow wire is the ground (negative) wire and the red wire is the positive (“hot”) wire. Both batteries are connected to a battery switch (See photograph below, which illustrates the location of the battery switches). The positions on the battery switch are ON and OFF. The switch must be turned to the ON position to supply power to the DC electrical system. When the battery switch is turned to the OFF position, power is disconnected to the DC electrical system.

NOTE: The bilge pumps, carbon monoxide detector and radio memory are NOT disconnected from their power source when the battery switch is turned to the OFF position. These accessories are connected directly to the battery and do not require a switch for operation.

Battery Charging System

The batteries maintain their charge from alternators, which are located on each engine. The alternators supply charging power to the batteries only while the engines are running. Your **352 MY** also has a converter, located in the bilge, which converts 120 volt AC electrical power from either the generator or shore power into 12 volt DC electrical power.

DC Main Panel

Turn ON DC main breaker switch on the main distribution panel.

Shore Power

Follow the procedures below to connect shore power to your yacht:

- Turn OFF all 120 volt circuit breakers at the main distribution panel. Shut down the generator if it is in operation.

WARNING **Using a damaged or improper cord for shore power connection can cause electrical shock and serious personal injury. Use a cord specifically designed for shore power connection. DO NOT use a household extension cord.**

- Connect the female end of the shore power cord to the yacht's inlet receptacle. Be certain the lock ring is tightly secured.

WARNING **DO NOT connect the shore power cord to the dockside electrical source first. You can accidentally drop the cord into the water which may result in electrical shock and serious personal injury.**

- Connect the Shore Power Cable to power supply. When connecting the shore power cable to the dockside outlet, be certain the cable has sufficient slack to prevent stretching during tidal changes.

- Turn ON main breaker switch on the shore power side of the main distribution panel.

The shore power side of the distribution panel should now be operable.

If there is no power to the electrical distribution panel, check the following:

- Breaker switch at dockside power supply.

- Main breaker switch on shore power side of distribution panel.

Follow the procedures below to disconnect shore power from your yacht:

- Turn OFF all 120 volt circuit breakers on the main distribution panel.

- Turn OFF the dockside circuit breaker switch.

- Disconnect the shore power cord from the dockside outlet.

- Disconnect the shore power cord from the yacht's inlet receptacle.

- Store your shore power cable in a safe, dry location.

Generator (Optional)

- Turn ON generator battery switch.

- Check sea strainer for debris and remove, if noted.

- Open raw water intake valve.

- Start the generator (Refer to "Starting Instructions" section in the Generator Manual included with your owner's packet).

- Raise the slide bar switch on the electrical distribution panel and turn the generator breaker switch to the ON position to power the AC electrical distribution panel.

12 Volt DC Electrical Distribution Panel

The following 12 volt DC breaker switches and their purpose are described below in the order in which they appear on the main electrical distribution panel:

DC Amperage Meter (Battery #1): Displays the amperage draw on Battery #1.

DC Volt Meter (Battery #1): Displays the voltage draw on Battery #1.

DC Amperage Meter (Battery #2): Displays the amperage draw on Battery #2.

DC Volt Meter (Battery #2): Displays the voltage draw on Battery #2.

DC Main #1: Supplies 12 volt DC power from Battery #1 to all breaker switches on the DC side of the electrical distribution panel.

DC Main #2: Supplies 12 volt DC power from Battery #2 to all breaker switches on the DC side of the electrical distribution panel.

Cabin Lights Salon: Supplies power to the cabin lights in the salon and galley.

Cabin Lights Forward: Supplies power to the cabin lights in the forward stateroom and forward head.

Courtesy Lights: Supplies power to all courtesy lights throughout the yacht.

Cabin Lights Aft: Supplies power to the cabin lights in the aft stateroom and aft head.

Aft Toilet: Supplies power to the aft toilet.

Forward Toilet: Supplies power to the forward toilet.

Fresh Water: Supplies power to the fresh water pump.

Forward Shower Pump: Supplies power to the forward shower sump pump.

Aft Shower Pump: Supplies power to the aft shower sump pump.

Macerator: Supplies power to the macerator pump.

Refrigerator: Supplies DC power to the refrigerator.

Spare: Supplies power to additional accessories.

Engine Room Lights: Supplies power to the engine room lights.

Bilge Pump Fuses and Breaker Switches

Forward Bilge Auto: Fuses the forward bilge pump automatic switch.

Forward Bilge Manual: Supplies power to the forward bilge pump when manually operated.

Mid Bilge Auto: Fuses the mid bilge pump automatic switch.

Mid Bilge Manual: Supplies power to the mid bilge pump when manually operated.

Aft Bilge Auto: Fuses the aft bilge pump automatic switch.

Aft Bilge Manual: Supplies power to the aft bilge pump when operated manually.

WARNING **Fuel fumes in the engine compartment can explode. Before working on any electrical wiring, ventilate the engine compartment and disconnect the batteries to prevent sparking.**

CAUTION **NEVER reset a breaker switch which has tripped automatically without first locating and correcting the problem. The electrical system and devices may be damaged.**

⚠ CAUTION **Alterations or extensions to the electrical system can cause electrical shock or fire. ONLY competent marine electricians should make system changes according to U.S. Coast Guard regulations.**

240 Volt AC Electrical Distribution Panel

The AC electrical system is a three-wire grounded system powered by either the generator (if so equipped) or shore power. There is a "ground fault interruption circuit" (GFIC) that protects all outlets. This system prevents accidental electrical shock. If power is lost to an outlet, reset the breaker switch at the GFIC outlet.

⚠ CAUTION **If you are unable to reset the GFIC breaker switch, contact your Silverton dealer or a competent marine electrician for inspection and repair. Failure to do so may result in a fire or damage to the electrical system.**

The AC electrical system is supplied with 240 volts of power upon entry to the main electrical distribution panel, which then is separated into two (2) legs of 120 volts each.

The following breaker switches and their function are described below in the order in which they appear on the main electrical distribution panel:

AC Amperage Gauge: Displays amperage draw on AC circuit.

Generator Start/Stop Switch: Starts and stops the generator.

AC Volt Gauge: Displays voltage draw on AC circuit.

Line 1/Line 2 Amperage Switch: Allows amperage gauge to display draw on either Line 1 or Line 2 as selected.

NOTE: Line 1 is considered the left side of the AC Electrical Panel. Line 2 is considered the right side of the AC Electrical Panel.

Generator Blower: Supplies power to the generator compartment ventilation blower motor.

Line 1/Line 2 Volt Switch: Allows volt gauge to display draw on either Line 1 or Line 2 as selected.

Shore Power (3 Switches): Supplies the AC Electrical Panel with power from a dockside source.

Generator (3 Switches): Supplies the AC Electrical Panel with power from the generator.

Converter: Supplies power to the converter, which converts DC power to AC power.

Refrigerator: Supplies AC power to the refrigerator.

Forward Outlets: Supplies power to the outlets in the forward cabin and forward head.

Mid Outlets: Supplies power to the outlets in the salon and galley.

Aft Outlets: Supplies power to the outlets in the aft stateroom and aft head.

Exterior Outlets: Supplies power to the outlets found on the exterior area of the yacht.

Microwave: Supplies power to the microwave oven outlet.

Salon Lighting: Supplies power to the AC lighting in the salon.

Icemaker: Supplies power to the icemaker unit.

Water Heater: Supplies power to the water heater.

CAUTION **Be certain the water heater is full of water and does not contain air. If the water heater is not full of water, damage to the heating elements may result when electrical power is turned ON to the unit.**

Forward Air Conditioner: Supplies power to the forward air conditioner.

Mid Air Conditioner: Supplies power to the mid air conditioner (if equipped with the optional 37,000 BTU system).

Aft Air Conditioner: Supplies power to the aft air conditioner.

Air Pump: Supplies power to the air conditioner raw water pump.

Vacuum System: Supplies power to the optional central vacuum cleaner system.

Range: Supplies power to the stove/oven combination.

Spare: Supplies power to additional AC accessories.

Spare: Supplies power to additional AC accessories.

WARNING **Fuel fumes in the engine compartment can explode. Before working on any electrical wiring, ventilate the engine compartment and disconnect the batteries to prevent sparking.**

CAUTION **NEVER reset a breaker switch which has tripped automatically without first locating and correcting the problem. The electrical system and devices may be damaged.**

CAUTION **Alterations or extensions to the electrical system can cause electrical shock or fire. ONLY competent marine electricians should make system changes according to U.S. Coast Guard regulations.**

Electrical Accessories

You may have purchased optional electronic accessories, such as a VHF radio, GPS system, or autohelm system, with your **352 MY**. These units are controlled by the switches marked ACC. located on the helm switch panel (shown below). These accessories are powered through the electrical panel. The switches used to control them are marked “SPARE”.

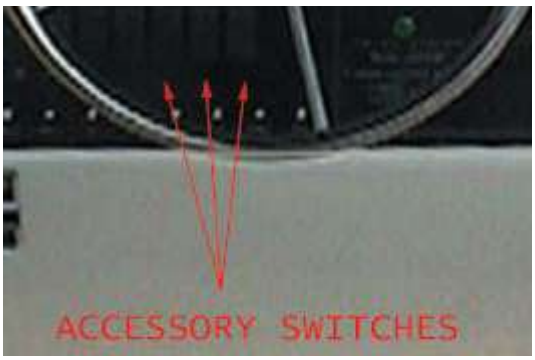

TROUBLESHOOTING GUIDE

DC ELECTRICAL SYSTEM

Problem	Cause	Solution
12 volt DC equipment not operating	Battery selector switch turned to OFF.	Check battery selector switches to ensure they are turned ON.
	Main breaker at DC Control Center OFF.	Switch breaker to ON.
	Weak or dead battery.	Change battery selector switch position; recharge battery.
	Main breaker at battery switch has been tripped.	Reset breaker.
Battery not charging (engine running)	Engine alternator belt loose.	Tighten belt.
Battery not holding a charge	Defective battery.	Replace battery.
12 volt DC device not working	Circuit breaker for device is OFF.	Switch breaker to ON.
	Weak or dead battery.	Change battery selector switch position; recharge battery.
	Faulty electrical connection.	Check 12 volt DC connections. Tighten or repair as needed.
Cabin lights not working (off or dim)	CABIN LIGHTS breaker OFF.	Switch breaker to ON.
	Weak or dead battery.	Recharge or replace battery.
	Light bulb burned out.	Replace bulb.

TROUBLESHOOTING GUIDE

AC ELECTRICAL SYSTEM

Problem	Cause	Solution
No 120 volt power	Main breaker(s) in engine compartment tripped or OFF on generator.	Turn breakers ON or reset.
	Breaker(s) at AC Control Center tripped or OFF.	Turn breakers ON or reset.
	Shore power breaker tripped.	Turn breakers ON or reset.
	Shore power cord not connected.	Check cord; plug in, if necessary.
	Loose or disconnected wire.	Tighten connections. See your dealer.
No power to 120 volt devices	Breaker(s) at AC Control Center tripped or OFF.	Turn breakers ON or reset.
	Shore power cord not connected.	Check cord; plug in, if necessary.
	Loose or disconnected wire.	Tighten connections. See your dealer.
Inadequate power to 120 volt devices (generator running)	Electrical demand greater than generator output	Switch OFF devices and equipment not needed. Increase generator RPM. Refer Generator Manual. Use shore power AC line, if available.

TROUBLESHOOTING GUIDE

AC ELECTRICAL SYSTEM

Problem	Cause	Solution
Continuous tripping of main	Cause of problem not determined.	Determine cause and correct problem before resetting breaker. See your dealer if problem persists.
No power at AC outlets	Outlet breakers in AC Control Center OFF. Ground fault interrupter tripped.	Switch breakers to ON. Reset button on outlet and test.

FRESH WATER SYSTEM

The purpose of the **Fresh Water System** is to provide a supply of pressurized potable water to the Galley, Heads and Transom Exterior Shower on demand and as needed. Your **352 MY** has two (2) separate systems that are independent of each other and they are identified as follows:

- **Fresh Water Pump System**
- **Dockside Water Supply System**

Fresh Water Pump System

The Fresh Water Pump System on your **352 MY** consists of the following components:

Fresh Water Tank (100 gallon capacity): The fresh water tank is located beneath the berth in the aft stateroom (See **Mechanical Layout** on Page 155 and 156, which illustrates the location of the fresh water tank). It is filled through a fill fitting that is marked "WATER" on the fill cap, which is located on the Starboard side of the transom, adjacent to the aft deck stairway (See **Deck Layout** on Page 153, which illustrates the location of the fresh water tank fill fitting).

WARNING **Fill the fresh water tank ONLY with potable water that is safe for drinking. DO NOT fill with water that may be of questionable quality as serious illness or death may occur.**

Fresh Water Pump: The fresh water pump is located to the rear of the water heater (See **Mechanical Layout** on Page 152 and 153, which illustrates the location of the water heater and the fresh water pump). The fresh water pump operates on DC electrical power controlled by a breaker switch located on the AC/DC Electrical Panel (See **AC/DC Electrical Panel Layout** on Page 159, which illustrates the location of the fresh water pump breaker switch). The fresh water pump is equipped with an automatic pressure switch and when it is supplied with electrical power, it will operate until the entire fresh water system is pressurized to a preset level. Once the required pressure is obtained, the fresh water pump will automatically shut off. The fresh water system should maintain the preset level of water pressure until one of the faucet or shower valves is opened. When the required pressure is lowered below the preset level, the fresh water pump will automatically return to operation.

Fresh Water Filter: The water pumped from the fresh water tank flows through a filter located on the suction side of the fresh water pump. Its purpose is to remove impurities that may be present in the fresh water system prior to its consumption. The filter is easily removed from the fresh water pump and should be cleaned on a regular basis (See photograph below, which illustrates the location of the **Fresh Water Filter**).

Fresh Water Lines (Cold Water and Hot Water): The fresh water lines carry the water from the fresh water tank to the water heater and the various faucets located in the Galley and Head areas of your **352 MY**. They are constructed of polybutylene plastic material and are 1/2 inch inside diameter. The COLD WATER lines have pale blue manufacturer's lettering and the HOT WATER lines have pale red manufacturer's lettering for identification purposes (See **Plumbing Layout** on Page 157). The fresh water lines require minimal maintenance, but they should be visually examined on a regular basis for any leaks, chafing or cracking. Tighten any loose connections as necessary. See your Silverton dealer for inspection of any suspected defective fresh water lines and their replacement, if necessary.

Dockside Water Supply System

Your **352 MY** is equipped with a dockside water inlet located in the transom storage compartment (See photograph below, which illustrates the location of the dockside water inlet). This system operates independently of the Fresh Water Pump System and simply depends on its connection to a suitable garden-type water hose for its supply of fresh water. When the water supply is connected to the water inlet and turned ON, the system is automatically pressurized without the need for the fresh water pump.

The water entering this system will not fill the fresh water tank; a check valve, located in the pressure line of the fresh water pump, prevents the water from entering the fresh water tank.

WARNING **Connect this system ONLY to a potable water system that is safe for drinking. DO NOT use water that may be of questionable quality as serious illness or death may occur.**

When you are connecting your system to a dockside water supply, be certain to examine all connections and water lines for any leaks. If any leaks are noted, turn OFF the water supply immediately and make the necessary repairs before you again turn ON the water supply. Remove any trapped air from the water system by opening all faucets until the air is exhausted and there is a steady flow of water. Close the faucets after the air is removed.

CAUTION **Always turn OFF the dockside water supply source when leaving your yacht unattended. A leak in the system could result in flooding and may cause your yacht to sink.**

REFER TO THE **WINTERIZATION AND STORAGE** SECTION OF THIS OWNER'S MANUAL FOR THE PROPER PREPARATION AND MAINTENANCE OF YOUR **FRESH WATER SYSTEM** PRIOR TO SEASONAL STORAGE OF YOUR YACHT.

FUEL SYSTEM

WARNING **Fuel, especially gasoline, is extremely flammable. Failure to follow these recommendations and the rules of good common sense could result in fire or explosion, which could cause personal injury or death.**

The purpose of the Fuel System is to maintain the necessary supply of fuel to the engines and generator (if so equipped) upon demand and as needed. The fuel system on your **352 MY** is comprised of the following components, which will be described separately:

- Fuel Tanks
- Fuel Tank Fills and Vents
- Fuel Tank Grounding System
- Fuel Distribution Hoses
- Fuel Supply Valves
- Fuel Filtration
- Generator Fuel Selector Valve
- Fuel Gauge and Selector Switch

Fuel Tanks

Your **352 MY** is equipped with two (2) fuel tanks, each having a capacity of 143 gallons, for a total fuel capacity of 286 gallons. Both fuel tanks are located within the engine compartment; one tank is located on the Port side and one tank is located on the Starboard side (See **Mechanical Layout** on Page 158 and 159, which illustrates the location of the fuel tanks). The Port fuel tank supplies fuel to the Port engine and the Starboard fuel tank supplies fuel to the Starboard engine. Either tank can supply the generator, if so equipped (See photograph above, which illustrates the **Generator Fuel Selector Valve**).

Each fuel tank is equipped with a fuel level sending unit, which provides an electrical signal to the fuel gauge to indicate the fuel level (See **Helm Switch Panel Layout** on Page 158, which illustrates the location of the **Fuel Gauge Selector Switch**).

The fuel tanks should be inspected for signs of leaks, corrosion and/or pitting at least once each year. Corrosion normally appears as a white chalky or flaky appearance on the surface of the tank. Sometimes it also appears as pitting or small pockets of missing aluminum. Another indication of corrosion could be bubbles on the paint that coats the fuel tank. If any of these conditions are present, have an authorized Silverton Service Technician inspect the tank(s) immediately. If a leak is found, turn OFF battery switches, disconnect the shore power (See **Shore Power - Connecting and Disconnecting** on Page 63, which explains the proper and safe method for disconnecting your shore power) and disable any possible source of ignition. Contact your Silverton dealer or Silverton Customer Service immediately.

WARNING **Leaking fuel is a fire and explosion hazard; personal injury or death could occur.**

Fuel Tank Fills and Vents

Each fuel tank is filled through its respective fuel fill fitting and the cap is marked GAS or DIESEL, depending on the type of engines that power your **352 MY.**

CAUTION **Using the wrong type of fuel will result in severe damage to the engines.**

The Port fuel tank fill fitting is located on the Port side of the transom and the Starboard fuel tank fill fitting is located on the Starboard side of the transom (See **Deck Layout** on Page 153, which illustrates the location of the fuel tank fill fittings). The fuel fill fittings are connected to the fuel tanks with the fuel fill hoses.

Each fuel tank has a hull vent fitting. These fittings are located on the Port and Starboard sides of the hull (See **Thru-hull Layout-Port and Starboard** on Page 151 and 152, which illustrates the location of the fuel tank vents). The vent fittings are connected to the fuel tanks with the fuel vent hoses. These vents allow air to pass through them when fueling and when the engines are drawing fuel from the tanks.

The fuel fill and fuel vent hoses, fittings and connections should be inspected for leaks and signs of dry rot or swelling at least once a year. If any of these conditions are present, have an authorized Silverton Service Technician inspect the entire fuel system immediately. If a leak is found, turn OFF the battery switches, disconnect shore power (See **Shore Power - Connecting and Disconnecting** on Page 63, which explains the proper and safe method for disconnecting your shore power) and disable any possible source of ignition. Contact your Silverton dealer or Silverton Customer Service immediately.

WARNING **Leaking fuel is a fire and explosion hazard; personal injury or death could occur.**

If any fuel hoses are in need of replacement, be certain that ONLY USCG TYPE A1 are used.

WARNING **The use of any hose other than USCG TYPE A1 or could result in fuel leakage. Leaking fuel is a fire and explosion hazard; personal injury or death could occur.**

Fuel Tank Grounding System

The fuel tanks and fuel fills on your **352 MY** are electrically grounded (or bonded) to the ground buss of the bonding system. This grounding system is designed to prevent the discharge of static electricity, which could cause a spark, especially when fueling your yacht. An authorized Silverton Service Technician should inspect this system at least once each year.

WARNING **While fueling, a spark caused by static electricity could result in fire or explosion, which could cause personal injury or death.**

Fuel Distribution Hoses

Each engine has a fuel supply hose that runs from the pickup tube in the fuel tank to the engine. Also, each engine has a fuel return hose that runs from the engine to the fuel tank. The generator has a fuel supply hose that runs to the fuel selector valve. Then, from the valve, there are two (2) supply hoses; one to each tank. If your **352 MY** is diesel powered, the fuel selector valve has dual ports and fuel return hoses routed similar to the supply hoses (See photograph on Page 76, which illustrates the **Generator Fuel Selector Valve**). All fuel supply and return hoses are USCG TYPE A1 and are pre-manufactured with swedged flare fittings on each end (See **Mechanical Layout** on Page 155 and 156, which illustrates the location of the fuel hoses).

The fuel supply and return hoses, fittings and connections should be inspected for leaks and signs of dry rot or swelling at least once each year. A good way to examine the fuel hoses is to run your hand along the length of the hose, including the fittings. Small leaks will be revealed as wet spots on your hand. If any evidence of hose deterioration is present, have an authorized Silverton Service Technician replace all of the hoses with USCG TYPE A1 hoses immediately. If a leak is found, turn OFF battery switches, disconnect shore power (See **Shore Power - Connecting and Disconnecting** on Page 63, which explains the proper and safe method for disconnecting your shore power) and disable any possible source of ignition. Contact your Silverton dealer or Silverton Customer Service immediately.

WARNING **Leaking fuel is a fire and explosion hazard; personal injury or death could occur.**

If any fuel hoses are in need of replacement, be certain that ONLY USCG TYPE A1 are used.

WARNING **The use of any hose other than USCG TYPE A1 could result in fuel leakage. Leaking fuel is a fire and explosion hazard; personal injury or death could occur.**

Fuel Supply Valves

If your **352 MY** is powered by gasoline engines, it is equipped with an anti-siphon valve, located on each fuel supply hose at its connection to its respective fuel tank pickup tube. The purpose of the anti-siphon valve is to immediately stop the flow of fuel from the fuel tank in the event of a break in the fuel supply hose. The anti-siphon valves are automatic and do not require manual operation.

Fuel Filtration

The fuel that is supplied to the engines and generator (if so equipped) may contain impurities found in the fuel tanks or contained in the fuel from your supplier. If these impurities are not removed prior to entering the engines/generator, performance may be seriously affected. Removal of the fuel

impurities is accomplished by external fuel filters, which are located within the fuel supply line.

If your **352 MY** is equipped with gasoline engines, each engine has its own separate fuel filter, located on the forward inboard side of the engine (See photograph below, which illustrates the location of the fuel filters on gasoline engine equipped yachts).

If your **352 MY** is equipped with diesel engines, each engine has a separate fuel filter, located on the inboard side of the engine (See photograph below, which illustrates the location of the fuel filter on diesel engine equipped yachts).

If your **352 MY** is equipped with a generator, a remote fuel filter with a fuel shut-off valve is located in the main generator fuel supply line, separate from the engine fuel supply lines (See photograph below, which illustrates the location of the generator fuel filter. The adjacent photograph illustrates the fuel shut-off valve).

An authorized Silverton Service Technician should replace all fuel filters annually prior to spring launch. They may need more frequent replacement if you notice poor engine/generator performance due to contaminated fuel.

Generator Fuel Selector Valve

If your **352 MY** is equipped with a generator, a fuel tank selector valve, located in the generator compartment, determines the tank from which it will draw its supply of fuel (See photograph below, which illustrates the location of the **Generator Fuel Selector Valve** for generator equipped models).

If your **352 MY** is diesel powered, the Generator Fuel Selector Valve also determines the tank to which the unused fuel is returned. This fuel is always returned to the same tank that is supplying the generator.

The fuel tank that is selected to supply the generator will display a lower fuel level than the other fuel tank when the generator is operated for an extended period of time. The Generator Fuel Selector Valve can be set so that this is reversed and fuel can be drawn from the opposite tank (See **Generator Fuel Selector Valve Diagram** below, which illustrates the open and closed positions of the valve).

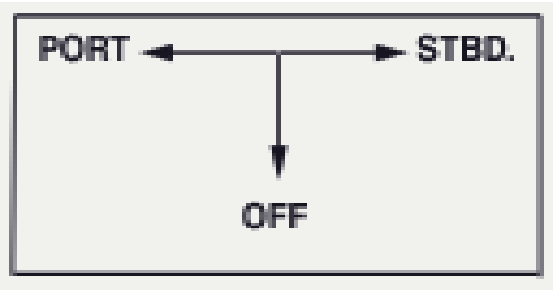

Fuel Gauge and Selector Switch

The purpose of the **Fuel Gauge** is to allow you to constantly monitor the fuel level in the fuel tanks. The fuel gauge on your **352 MY** is located at the helm station on the Starboard side of the helm gauge panel (See **Helm Gauge Panel Layout** on Page 158, which illustrates the location of the Fuel Gauge). A manual rocker-type **Fuel Gauge Selector Switch** determines which fuel tank level (Port or Starboard) is displayed on the fuel gauge (See **Helm Switch Panel Layout** on Page 158, which illustrates the location of the Fuel Gauge Selector Switch). Depress the top of the switch to read the Port fuel tank and the bottom of the switch to read the Starboard fuel tank level.

Fueling Your 352 Motor Yacht
Fuel Quality

Refer to your **Engine Manual**, included with your owner's packet, for specific fuel requirements for your engine, i.e., recommended octane level.

Fuel Additives

Refer to your **Engine Manual** for recommendations concerning fuel additives.

Refer to the **Winterization and Storage Section** of this Owner's Manual concerning the use of fuel stabilizers. Always follow the manufacturer's recommendation when using fuel additives or stabilizers.

General Guidelines For Fueling Your Yacht

WARNING **Leaking fuel is a fire and explosion hazard; personal injury or death could occur.**

- Before fueling, check the fuel system for leaks. Check the fuel system components for signs of weakening, swelling or corrosion. See your Silverton dealer for replacement of any leaking or defective fuel system components before starting your engines.

- If possible, fuel your yacht only during the hours of daylight. Fuel spills are easier to detect when visibility is good.

- To reduce condensation and the accumulation of moisture in the fuel system, keep your fuel tanks as full as possible, especially during overnight docking or mooring.

- When fueling your yacht in warm weather, allow for expansion of the fuel and DO NOT "top off" the fuel tanks. The fuel tanks may overflow when the fuel expands after being pumped from cool, underground tanks or when the air temperature is cool, such as early morning or evening.

- Never hurry through the fueling procedure. In your haste, you may overlook an important step, resulting in improper fueling.

- Be certain you use the correct fuel type for your specific engine that is recommended by the engine manufacturer; gasoline or diesel.

CAUTION **Using the wrong type of fuel will result in severe damage to the engines.**

Fueling Procedure

- Safely and securely moor your yacht to the fuel dock.

- Turn the engines, generator and battery switches OFF to prevent the possibility of electrical spark.

- Disconnect shore power (See **Shore Power - Connecting and Disconnecting** on Page 63, which explains the proper and safe method for disconnecting your shore power).

- Extinguish all smoking materials and any other items that may produce a spark or flame.

WARNING **A spark or open flame can ignite fuel or fuel vapor, which could cause personal injury or death.**

- Completely close all ports, hatches, windows, doors and compartments. Silverton recommends that all guests depart your yacht during the fueling process.

DANGER **Fuel evaporates at a very low temperature. Vapors can collect in areas inside your yacht and create an explosion hazard. An explosion will cause serious personal injury or death. Close all ports, windows, hatches, doors and compartments before fueling.**

- Touch the nozzle of the fueling hose to the fill cap to discharge any existing static electricity.

- Remove the fuel fill cap and insert the fuel hose nozzle into the fill pipe.

- Always maintain contact between the fuel hose nozzle and the fuel fill pipe to avoid the possibility of static electricity buildup. If static electricity forms during the fueling process, it may generate a spark, resulting in igniting the fuel.

WARNING **While fueling, a spark caused by static electricity could result in fire or explosion, which could cause personal injury or death.**

- After pumping several gallons of fuel, STOP and inspect the engine compartment for any signs of fuel leakage. DO NOT continue the fueling process if leaks are noted. Have an authorized Silverton Service Technician inspect and repair the leak before proceeding.

WARNING **Leaking fuel is a fire and explosion hazard; personal injury or death could occur.**

- If no leaks are noted, continue filling the fuel tanks and be certain to allow for fuel expansion in warm weather. As the fuel tanks fill near the top, slow the fuel entry to avoid overflow through the fuel tank vent (See **Thru-hull Layout-Port and Starboard** on Page 151 and 152, which illustrates the location of the fuel tank vents).

- After the fuel tank is filled, remove the fuel nozzle and replace the fuel fill cap, securing tightly. If any fuel was spilled, clean it up immediately.

- After the fueling process is complete, open all hatches, doors and compartments. Visually examine all fuel system components for any sign of leakage and if noted, have an authorized Silverton Service Technician inspect and repair the leak.

- Turn battery switch ON and operate the bilge blower motors for at least five (5) minutes to ventilate the engine compartment. Refer to the **Before Starting The Engines Section** below. Start the engines and return your yacht to normal operating condition. DO NOT smoke until you are a safe distance away from the fuel dock.

Before Starting The Engines

- Before starting the engines or generator (if so equipped), ALWAYS inspect the engine and generator compartments for fuel leakage. Sniff to detect any odor of fuel. If leakage or fuel odor are present, open all doors and windows for ventilation and evacuate your yacht immediately.

- Notify the dockmaster and have an authorized Silverton Service Technician inspect the entire fuel system and repair the leak before proceeding.

WARNING **Leaking fuel is a fire and explosion hazard; personal injury or death could occur.**

- If you do not detect any fuel odors and there are no fuel leaks, open the doors and windows to ventilate your yacht.

- Operate the bilge blower motors for five (5) minutes before starting the engines or generator.

Refer to the **Operating Your Yacht Section** of this Owner's Manual for engine starting instructions.

FUEL SAFETY CHECKLIST FOR BOARDING

This fuel safety checklist is designed to be used as a quick reference to minimize the risks associated with fuel hazards. You should refer to this checklist every time you board your yacht. Read your Owner's Manual so that you have a full understanding of the fuel system on your yacht.

WARNING **Fuel, especially gasoline is extremely flammable. Failure to follow these recommendations and the rules of good common sense could result in fire or explosion; which could cause personal injury or death.**

- Before approaching your yacht extinguish all smoking materials and make certain there are no other sources of possible ignition near your yacht.
- Approach your yacht alone to make the initial inspection. Have your guests and crew standby a safe distance away.
- From the dock visually inspect your yacht for any fuel leaks from the deck fills or hull vents and take notice if there is any odor of fuel.
- Once onboard, open cabin door and sniff at doorway then inside cabin for fuel odor.
- Open the engine compartment hatch and sniff for fuel odor.
- Inspect the engine compartment and all bilge compartments for fuel leaks and sniff for fuel odor.
- If there are any signs of fuel leakage, either visually or by odor, open doors, hatches, and windows. Evacuate the boat and inform the Dock Master. Have an authorized Service Technician inspect your yacht.
- If no signs of fuel are present, board your guests and crew.
- Run exhaust blowers for five minutes before starting the engines or generator.
- Always be aware of the hazards associated with fuel and practice good common sense.

"HAPPY SAFE BOATING" FROM THE SILVERTON TEAM

GENERATOR SYSTEM (OPTIONAL)

You may have chosen as an option when you purchased your **352 MY**, a **Generator System**, manufactured by *Kohler Company* and factory installed at the Silverton plant. If your **352 MY** is equipped with gasoline powered engines, the generator will have an 7.3 kilowatt rating and if equipped with diesel powered engines, the generator will have a 8.0 kilowatt rating. As discussed in the **Fuel System Section** of this Owner's Manual, fuel is supplied to the generator from either fuel tank, depending on your selection at the **Generator Fuel Selector Valve** (Refer to the **Fuel System Section** on Page 73 for information concerning the Generator Fuel Selector Valve). The **Generator System** is controlled by a breaker switch, located on the AC/DC Electrical Panel (**See AC/DC Electrical Panel** on Page 159, which illustrates the location of the breaker switch that controls the **Generator System**). The system START and STOP switch is also located on the AC/DC Electrical Panel as is a slide bar switch that permits you to change from generator electrical power to shore electrical power as desired. The **Generator System** is located in the generator compartment, which is accessed through a floor hatch in the Galley floor (See photograph below, which illustrates the location of the **Generator System** and the generator compartment access hatch).

Operation of the **Generator System** is as follows:

- Turn ON the Generator System battery switch.
- Check sea strainer for debris and remove, if noted
- Be certain the seawater intake valve that services the generator is in the OPEN position. The valve is open when the handle is parallel to the valve body (See photographs below, which illustrate the location of the generator seawater intake valve and its OPEN and CLOSED positions).

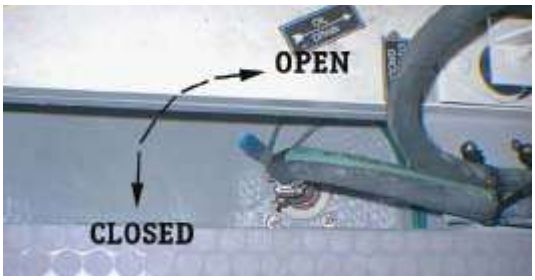

- Turn ON the breaker located on the generator.
- Move slide bar switch to generator power mode.
- Operate generator compartment blower motor for at least five (5) minutes before starting generator and continue to run while operating your yacht below cruising speed.
- Check for presence of Gasoline odor in the bilge.

WARNING Gasoline vapors in the bilge can cause explosion and fire aboard your yacht.

- Start the generator (Refer to “Starting Instructions” section in the Generator Manual included with your Owner’s Packet).

- Depress START switch on AC/DC Electrical Panel until generator starts.

⚠ CAUTION **DO NOT depress START switch for more than thirty (30) seconds as damage to the generator starter motor may result. If the generator does not start within 30 seconds, release the START switch and allow the starter motor to cool for at least sixty (60) seconds before again attempting to start the generator.**

To cease operation of the Generator system, depress the STOP switch on the AC/DC Electrical Panel. After the generator stops running, release the STOP switch. Continue to operate the blower motor for several minutes to be certain the generator compartment is completely evacuated of any fuel fumes. Return the slide bar switch to the shore power mode and turn OFF the breaker switch. Turn OFF the Generator System battery switch.

Refer to “Generator” in the Electrical System section of this manual on page ? for using the generator output to power the boat.

⚠ DANGER **While operating your Generator system, always be certain there is adequate ventilation in the cabin areas of your yacht to avoid the potential accumulation of Carbon Monoxide Gas (CO). Carbon Monoxide Gas is colorless, odorless and tasteless. It is highly poisonous, endangering lives even at very low levels of concentration. Mild exposure causes headaches and fatigue, often resembling “flu-like” symptoms. Medium exposure causes severe headaches, drowsiness, nausea and rapid heart rate. Extreme exposure results in unconsciousness, convulsions, cardiorespiratory failure and death. If Carbon Monoxide Gas is detected in your yacht, immediately contact a qualified technician to locate and repair the source of the poisonous gas. DO NOT enter your yacht until repairs have been made and the Carbon Monoxide Gas is lowered to an acceptable level. Refer to the Carbon Monoxide Gas (CO) Detector System Section of this Owner’s Manual for additional information and cautions concerning this deadly gas.**

REFER TO THE *KOHLER COMPANY* GENERATOR MANUAL INCLUDED WITH YOUR OWNER’S PACKET FOR ADDITIONAL TECHNICAL INFORMATION CONCERNING THE OPERATION AND MAINTENANCE OF YOUR **GENERATOR SYSTEM**.

HOT WATER SYSTEM

Your **352 MY** is equipped with a 10.5 gallon water heater, which is operated on the A/C electrical system. Cold water is supplied to the water heater via the fresh water pump, which is then heated for distribution when desired. Similar to the water heater in your home, there is always a continuous supply of water to maintain a full tank at all times. The water heater in your **352 MY** is a "high recovery" model, meaning the cold water entering the tank is heated very quickly to replace the hot water as it is used.

Operation of the water heater is as follows:

- Be certain the water heater is full of water. You can easily check this by turning ON a hot water faucet. If water flows from the faucet, the water heater is full.

CAUTION **If the water heater is not full of water, damage to the heating elements may result when electrical power is turned ON to the unit.**

- Turn ON the water heater breaker switch, which is located on the AC/DC electrical panel (See **AC/DC Electrical Panel Layout** on Page 159, which illustrates the location of the water heater breaker switch).

NOTE: The water heater will operate on AC electrical current only. You must either plug in your shore power cord or operate your generator (if so equipped) for the water heater to function.

- Allow sufficient time for the water heater to heat its contained water before using (approximately 1/2 hour).

General maintenance of the Hot Water System is as follows:

- Inspect all water lines and their connections at regular intervals. Tighten connections as needed. If the water lines appear worn or are not flexible, see your Silverton dealer for replacement.

- Manually operate the pressure relief valve on the water heater at least once a year (See photograph below, which illustrates the location of the valve).

WARNING **DO NOT operate the pressure relief valve while the water heater contains hot water. Serious burns or injury could result.**

- Flush out the water heater tank at least once a year, if not used regularly.

Refer to the **Winterization and Storage Section** of this Owner's manual for proper preparation for seasonal storage of the water heater.

HYDRAULIC STEERING SYSTEM

The steering system in your **352 MY** is manufactured by *Sea Star*, a subsidiary of *Teleflex (Canada, Ltd.)*, and is hydraulically assisted. Hydraulic assisted steering is similar to the power steering system in your automobile and greatly reduces the manual effort necessary to steer your yacht and maintain the desired course. The **Hydraulic Steering System** in your **352 MY** differs from your automobile, as a separate pump is not used to circulate the hydraulic fluid contained in the system; the system is completely filled with hydraulic fluid and is free of air. As you turn your steering wheel, the hydraulic fluid is pumped by the steering head into the appropriate fluid line, Port or Starboard, resulting in movement of the steering cylinder in the respective direction. The steering cylinder is connected to the rudders and they are subsequently turned, which enables your yacht to turn in the desired direction; to Port or Starboard (See photograph below which illustrates the location of the steering cylinder and its connection to the rudders).

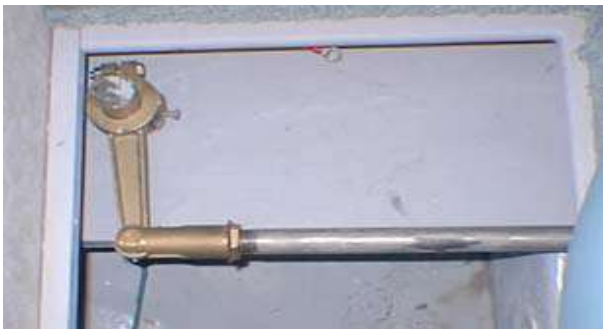

The **Hydraulic Steering System** in your **352 MY** utilizes an adjustable tilt-type steering head, which allows you to adjust the steering wheel angle for maximum personal comfort. The steering head contains a vented fill cap on single station models and on the upper helm station ONLY on lower station models. The vented cap is located on the top of the steering head and forward of the steering wheel. The lower station steering head fill cap is NOT vented. The hydraulic fluid level should be checked on the upper helm station ONLY. If needed, hydraulic fluid is added at this location to fill the reservoir to the proper level.

Maintenance of the **Hydraulic Steering System** should only be performed by your Silverton dealer or a qualified technician, who is experienced in marine hydraulic systems. Periodically examine all connections and hydraulic lines for any signs of leakage. If any leaks are noted, contact your Silverton dealer for further inspection and repair, if necessary.

REFER TO THE *SEA STAR* MANUAL INCLUDED WITH YOUR OWNER'S PACKET FOR THE SPECIFIC TYPE OF HYDRAULIC FLUID REQUIRED AND TECHNICAL INFORMATION CONCERNING THE **HYDRAULIC STEERING SYSTEM**.

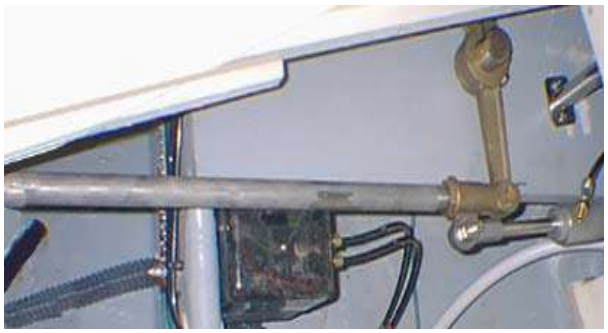

ICEMAKER UNIT (OPTIONAL)

You may have chosen as an option when you purchased your **352 MY**, an **Icemaker Unit**, manufactured by *U-Line Corporation* and factory installed at the Silverton plant. The purpose of this system is to provide you with a continuous supply of fresh ice upon demand and as needed.

The **Icemaker Unit**, which is located on the aft deck, operates on AC electrical power and is controlled by a breaker switch located on the AC/DC electrical Panel (See **AC/DC Electrical Panel Layout** on Page 159, which illustrates the location of the breaker switch that controls the **Icemaker Unit**). While your **352 MY** is underway, you must operate your generator (if so equipped) to maintain operation of the **Icemaker Unit** (See photograph below, which illustrates the location of the **Icemaker Unit**).

REFER TO THE *U-LINE CORPORATION* ICEMAKER MANUAL INCLUDED WITH YOUR OWNER'S PACKET FOR SPECIFIC INSTRUCTIONS CONCERNING THE OPERATION AND MAINTENANCE OF THE **ICEMAKER UNIT**.

LPG SYSTEM (OPTIONAL)

You may have purchased as an option with your **352 MY** an optional LPG Cooking System. This system is manufactured by Seaward Products. The purpose of this option is to give a alternative to electric cooking in your boat.

WARNING Open flame appliances consume oxygen. This can cause asphyxiation or death. Maintain open ventilation. Do not use this appliance for comfort heating.

It is recommended that every time the LPG tank valve is opened for use, the operator close the valve and watch that the gauge needle remain constant. If leaks occur, repair the leak. If the leak cannot be repaired, DO NOT operate the appliance.

Regular cleaning with a soft cloth and warm detergent solution is generally enough to keep your cooktop clean and beautiful. This is done when the cooktop is cool. Use a dry cloth or paper towel to clean splatters and spills when surfaces are warm.

Due to the nature of LPG gas, it is necessary to discuss safety items associated with the operation this system.

1) This system is designed for use with Liquefied Petroleum Gas (LPG) only. Do not connect Compressed Natural Gas (CNG) to this system.

2) Keep cylinder valves and solenoid valves closed when boat is unattended. Close them immediately in any emergency. When on board, cylinder valves and solenoid valves shall be closed when appliances are not in use. Keep empty cylinder valves closed tightly. Keep protective covers caps or plugs in place.

3) Close appliance valves before opening cylinder valves.

4) Test for system leakage each time the cylinder supply valve is opened for appliance use. Close all appliance valves. Open then close cylinder supply valve. Observe pressure gauge at the regulating device and see that it remains constant for not less than three minutes before any appliance is used. If any leakage is evidenced by a pressure drop, check system with a leak detection fluid or detergent solution which does not contain ammonia and repair before operating system.

NOTE: Ammonia, which is present in some soaps and detergents, attacks brass fittings. Undetectable at first, in a matter of months, these fittings may develop cracks and leaks.

DANGER NEVER USE FLAME TO CHECK FOR LEAKS!

5) Do not obstruct quick access to LPG system components in any way.

6) Do not use LPG cylinder housing for storage of any other equipment.

7) Never leave craft unattended when LPG consuming appliances are in use.

8) Do not smoke or use open flame when replacing LPG Cylinders.

9) Inspect hoses in system at least annually. Replace every five years or sooner if deterioration is found.

10) Inspect flue pipes at least annually. Replace if deterioration or openings are found.

REFER TO THE SEAWARD PRODUCTS OWNER'S MANUAL FOR ADDITIONAL OPERATION AND SAFETY INFORMATION ON YOUR LPG SYSTEM.

MARINE SANITATION SYSTEM

All vessels with fixed toilets that are operated on the waterways of the United States and some foreign countries are required to be equipped with an operable Marine Sanitation Device (MSD). The **Marine Sanitation System** in your **352 MY** is a Waste Tank system, defined by the United States Coast Guard as a Type III System. Type III Systems permit operation of the toilet without the direct discharge of untreated waste after every flush. Type III Systems can be discharged at marina dockside pump-out stations or, if in coastal waters, at least three (3) miles offshore.

NOTE: Overboard discharge capability must remain inoperative while within the 3 mile limit. This is accomplished by closing the macerator discharge thru-hull valve (See **Mechanical Layout** on Page 151 and 152, which illustrates the location of the macerator discharge thru-hull valve).

Your **352 MY** is equipped with one of the following **Marine Sanitation Systems**, depending on the option you chose from your Silverton dealer at the time of purchase:

- *SeaLand* Vacuflush Toilet
- *Jabsco* Quiet-Flush Electric Toilet (Fresh Water)
- *Jabsco* Quiet-Flush Electric Toilet (Raw Water)

Each system is described as follows:

***SeaLand* Vacuflush Toilet**

This system is operated by vacuum, combined with a small quantity of water supplied by the pressurized fresh water system (approximately one (1) pint per flush) and is controlled by DC electrical power. Each toilet is equipped with an integral vacuum breaker that prevents a backflow of contaminated water into the potable water supply. Vacuum energy, supplied by the Vacuum Pump, is stored in a Vacuum Tank and is monitored to maintain a certain level. The Vacuum Pump is controlled by an electrical breaker switch, located on the AC/DC Electrical Panel (See **AC/DC Electrical Panel Layout** on Page 159, which illustrates the location of the breaker switches). As the toilet is flushed, vacuum energy is depleted and the Vacuum Pump will automatically activate to restore the required level. The Vacuum Pump will operate for approximately 30 to 90 seconds until the system reaches the required operating vacuum level. Toilet waste, both liquid and solid, is removed by the vacuum energy and water combination to a Waste Tank having a capacity of sixty (60) gallons (See **Mechanical Layout** on Page 155 and 156, which illustrates the location of the Waste Tank). This waste is stored in the Waste Tank until pumped out at a proper facility. The Waste Tank is equipped with an electronic Waste Level Gauge, which monitors the volume of waste in the tank for your convenience in determining when pump-out is required (See photograph on Page 96, which illustrates the location of the **Waste Level Gauge**).

Maintenance of your *Sea Land* Vacuflush Sanitation System consists of periodic cleaning of the toilet bowl with a mild non-abrasive cleaner. The Waste Tank should be thoroughly rinsed after each pump-out and a sanitation system deodorizer should be added to the Waste Tank by flushing through the toilet.

⚠ CAUTION **DO NOT use chlorine-based or caustic cleaning agents or chemicals, such as drain opening products, in your *SeaLand* Vacuflush Sanitation System. Use of these products may cause serious damage to the system's seals and hoses.**

REFER TO THE *SEALAND* VACUFLUSH SANITATION SYSTEM MANUAL INCLUDED WITH YOUR OWNER'S PACKET FOR ADDITIONAL TECHNICAL INFORMATION CONCERNING THE USE AND MAINTENANCE OF THIS SYSTEM, INCLUDING THE PROPER PROCEDURE FOR WINTERIZATION AND STORAGE.

***Jabsco* Quiet-Flush Electric Toilet (Fresh Water)**

This system is operated by water supplied by the pressurized fresh water system (approximately 1 - 2 quarts per flush) and is controlled by DC electrical power. Each toilet is equipped with a push button switch, that when depressed, activates both the rinse water supply and the macerator discharge pump simultaneously. In addition to the push button switch, a separate rocker-type switch may be used to control the rinse water supply, independent of the macerator. This feature allows conservation of your fresh water supply as well as the ability to raise the water level, if needed, for proper evacuation of the toilet bowl under all conditions. To prevent contamination of the fresh water supply, this system is equipped with an anti-siphon breaker contained in the water control solenoid valve. The water control solenoid valve of each toilet is controlled by an electrical breaker switch, located on the AC/DC Electrical Panel (See **AC/DC Electrical Panel Layout** on Page 159, which illustrates the location of the breaker switches). Toilet waste, both liquid and solid, is flushed from the toilet by the macerator to a Waste Tank having a capacity of sixty (60) gallons (See **Mechanical Layout** on Page 151 and 152, which illustrates the location of the Waste Tank). This waste is stored in the Waste Tank until pumped out at a proper facility. The Waste Tank is equipped with an electronic Waste Level Gauge, which monitors the volume of waste in the tank for your convenience in determining when pump-out is required (See photograph on this page, which illustrates the location of the Waste Level Gauge).

Jabsco Quiet-Flush Electric Toilet (Raw Water)

This system is identical to the fresh water system in its operation, but uses raw water pumped from the sea as its rinse water source instead of fresh water supplied by the pressurized fresh water system. This system is not equipped with a separate

rocker-type switch to control the rinse water level and the volume is consistent (approximately 1 - 2 quarts per flush). As with the fresh water system, to prevent contamination of the raw water supply, this system is equipped with an anti-siphon breaker contained in the water control solenoid valve. The water control solenoid valve of each toilet is controlled by an electrical breaker switch, located on the AC/DC Electrical Panel (See **AC/DC Electrical Panel Layout** on Page 159, which illustrates the location of the breaker switches). Toilet waste, both liquid and solid, is flushed from the toilet by the macerator to a Waste Tank having a capacity of sixty (60) gallons (See **Mechanical Layout** on Page 151 and 152, which illustrates the location of the Waste Tank). This waste is stored in the Waste Tank until pumped out at a proper facility. The Waste Tank is equipped with an electronic Waste Level Gauge, which monitors the volume of waste in the tank for your convenience in determining when pump-out is required (See photograph on previous page, which illustrates the location of the Waste Level Gauge).

Maintenance of your *Jabsco* Quiet-Flush Electric Toilet Sanitation System consists of periodic cleaning of the toilet bowl with a mild nonabrasive cleaner. The Waste Tank should be thoroughly rinsed after each pump-out and a sanitation system deodorizer should be added to the Waste Tank by flushing through the toilet.

⚠ CAUTION **DO NOT use chlorine-based or caustic cleaning agents or chemicals, such as drain opening products, in your *Jabsco* Quiet-Flush Sanitation System. Use of these products may cause serious damage to the system's seals and hoses.**

REFER TO THE *JABSCO* QUIET-FLUSH TOILET MANUAL INCLUDED WITH YOUR OWNER'S PACKET FOR ADDITIONAL TECHNICAL INFORMATION CONCERNING THE USE AND MAINTENANCE OF BOTH THE FRESH WATER AND RAW WATER SYSTEMS.

REFER TO THE **WINTERIZATION AND STORAGE SECTION** OF THIS OWNER'S MANUAL FOR THE PROPER PREPARATION PROCEDURE FOR EXTENDED STORAGE IN COLD CLIMATES.

OIL X-CHANGE-R SYSTEM (OPTIONAL)

You may have chosen as an option when you purchased your **352 MY**, an ***OIL X-CHANGE-R* System**, manufactured by *Ray Zager & Company* and factory installed at the Silverton plant. The purpose of the ***OIL X-CHANGE-R* System** is to automatically drain, fill and maintain engine and/or transmission oil with relative ease and no spilled oil, which is normally associated with your required periodic oil changes. The ***OIL X-CHANGE-R* System** consists of an enclosed pump, located in the engine compartment, which operates on DC electrical power (See photograph below, which illustrates the location of the ***OIL X-CHANGE-R* System**). The system pump is controlled by a breaker switch, located on the AC/DC Electrical Panel and described as "Accessory" (See **AC/DC Electrical Panel Layout** on Page 159, which illustrates the location of the "Accessory" breaker switch that controls the ***OIL X-CHANGE-R* System**). Operation of the system is accomplished by turning ON the toggle switch located on the pump unit.

REFER TO THE *OIL X-CHANGE-R* SYSTEM MANUAL INCLUDED WITH YOUR OWNER'S PACKET FOR INFORMATION CONCERNING THE OPERATION AND MAINTENANCE OF THIS SYSTEM.

PORTABLE FIRE EXTINGUISHER SYSTEM

As a yacht owner or operator, you have the responsibility of having the required quantity of United States Coast Guard approved portable fire extinguishers aboard at all times, except during storage. The portable fire extinguishers must be operational and of the proper classification. The classification of portable fire extinguishers and their appropriate use is as follows:

CLASS "A"

"Fires in ordinary combustible materials, such as wood, paper and cloth, where the quenching-cooling effect of quantities of water or high water content solution cools the burning material below the ignition temperature."

CLASS "B"

"Fires in flammable petroleum products or other flammable liquids, greases, etc., where the blanketing-smothering effect of oxygen-excluding media is most effective."

CLASS "C"

"Fires involving electrical equipment where the electrical conductivity of the extinguishing media is the first consideration."

Your **352 MY** is equipped with two (2) Class B/C portable, handheld fire extinguishers. Class B/C fire extinguishers will effectively fight fires of the Class "B" and Class "C" type. The Class B/C portable fire extinguisher contains pressurized dry powder, which when released, will leave a powder residue that smothers the fire and removes its source of oxygen. Once the source of oxygen is removed, the fire cannot continue to burn and it will be extinguished.

The fire extinguishers shipped with your **352 MY** should be mounted in a readily accessible location away from the engine compartment, but in a relative position to potential fire hazards, such as the Galley. The fire extinguishers should be mounted within plain view and all passengers on board should be familiar with their location and operation before departing your dock.

Maintenance of your portable fire extinguishers should consist of periodic cleaning of the canisters and making certain they are easily seen and readily accessible. Periodically examine the gauge on each fire extinguisher to be sure they are fully charged. If the gauge indicates the fire extinguisher is not fully charged, contact your Silverton dealer for replacement. DO NOT test the charge of your portable fire extinguishers by operation of them; it will discharge them unnecessarily.

REFER TO THE OPERATING INSTRUCTIONS DISPLAYED ON THE FIRE EXTINGUISHER CANISTERS FOR A DETAILED DESCRIPTION OF THEIR OPERATION AND USE.

PROPULSION SYSTEM

Propulsion of your **352 MY** is accomplished by two inboard engines, located within the engine compartment. Depending on the option you chose upon purchase from your Silverton dealer, the engines are either fueled by gasoline or diesel fuel. Each engine transmits its power to a separate transmission, which rotates the attached propeller shaft and the propeller, providing forward or reverse movement of your yacht as selected from the shift control unit located on the Port side of the helm (See photograph below, which illustrates the location of the **Shift Control Unit** and the **Throttle Control Unit**). The transmissions are counter-rotating. This is defined as when in the forward shift mode and viewing forward from aft, the Port transmission rotates the Port propeller counterclockwise and the Starboard transmission rotates the Starboard propeller clockwise.

Access to the engine compartment in your **352 MY** is provided through two (2) floor hatches, located in the salon floor, and two (2) panel hatches, located on the forward bulkhead of the aft stateroom (See photographs below, which illustrate the location of the **Engine Compartment Hatches**).

The engine starting procedure is as follows:

- Open and inspect the engine compartment. Use your sense of smell to detect the presence of fuel fumes.

- Turn battery switch ON.

- Operate the bilge blower motors for at least five (5) minutes. Check for air flowing out of the bilge exhaust vent (See photograph on Page 22, which illustrates the location of the bilge exhaust vent). If you feel air flowing from the exhaust vent, the bilge blower motor is operating properly.

- Check the bilge water level. If it appears above normal, turn ON the bilge pump(s) and remove the water. Determine the source of the excess water and repair, if necessary, before starting the engines.

- Check the bilge for the presence of any oil. Determine the source of the oil and repair, if necessary, before starting the engines.

- Open both engine seawater intake valves (See **Mechanical Layout** on Page 151 and 152, which illustrates the location of the engine seawater intake valves). The valves are open when the handles are parallel to the valve body (See photograph above, which illustrates the open and closed positions of the engine seawater intake valves).

1. Visually examine both seawater strainers to ensure they are free of debris. Clean if debris is noted.

- Check all cooling and lubricating fluids (See photograph below, which illustrates the location of the engine oil “dipstick”). Add engine oil or transmission oil, if needed, but DO NOT overfill.

WARNING **DO NOT remove the cooling system filler cap when the engine is hot. Allow the engine to cool and then remove the pressure cap slowly, allowing the pressure to vent. Hot coolant, under pressure, may discharge violently and result in serious personal injury and burns.**

- Place the transmission shift controls at the helm station in the neutral position. The feel of a “detent” midway between the forward and reverse positions indicates the neutral position.

- Place the throttle controls in the idle or “down” position.

- Turn the ignition key to ON, but not to START. The engine alarm buzzer should sound and the automatic fire extinguisher system indicator light should illuminate.

- Turn the ignition key to START and hold in this position until the engine starts. If the engine starter motor does not operate, the neutral safety switch may be out of adjustment. Slowly and carefully move the transmission shift control lever up and down until the starter motor operates. See your Silverton dealer or a competent technician as soon as possible to obtain the proper adjustment for the neutral safety switch. Release the ignition switch as soon as the engine starts. The engine alarm buzzer should turn OFF when the engine oil pressure reaches normal operating range. The automatic fire extinguisher indicator light should remain illuminated.

CAUTION **If the engine fails to start within thirty (30) seconds, release the ignition switch. Allow the starter motor to cool for at least sixty (60) seconds and then try again to start the engine. Prolonged starting attempts may result in starter motor overheating and damage.**

CAUTION **Failure to release the ignition switch from the START position after the engine starts may result in serious damage to the starter motor and/or engine flywheel.**

CAUTION **If the engine alarm buzzer DOES NOT turn OFF, turn OFF the engine immediately if the oil pressure gauge displays no, or very low, oil pressure. See your Silverton dealer for inspection and repair, if necessary. No, or very low, oil pressure may cause serious damage to the internal mechanism of your engine(s).**

WARNING **If the automatic fire extinguisher indicator light DOES NOT remain illuminated, turn OFF the engine(s) immediately and follow the proper procedure to check for fire aboard your yacht as detailed in the Automatic Fire Extinguisher System Section of this Owner’s Manual. A fire aboard your yacht may result in serious personal injury or death.**

- If one of the batteries is “dead” or not sufficiently charged to start your engine, depress the “Parallel Start Switch” simultaneously while turning the ignition switch to START. The parallel start switch draws power from both batteries during the starting procedure and it is located on the helm switch panel (See **Helm Switch Panel Layout** on Page 158, which illustrates the location of the parallel start switch). Release both switches immediately after the engine starts.

⚠ CAUTION **DO NOT continue to depress the "Parallel Start Switch" after the engine has started. Damage to the alternator(s) may result.**

After you have started both engines and determined they are running properly, the "warm-up" procedure should be followed before departing the dock/mooring. The proper "warm-up" procedure is as follows:

- Check the oil pressure gauges to be certain each engine has sufficient oil pressure. Gasoline engines should have between 30 and 50 psi (pounds per square inch) and diesel engines should have between 35 and 70 psi. If the oil pressure is lower than the normal operating range, turn OFF the respective engine and contact your Silverton dealer for further inspection and repair, if necessary.

- Allow the engines to run at the RPM's specified in the Engine Manual until they reach the proper operating temperature. Normal operating temperature for gasoline engines is 140° F with a raw water cooling system and 170° F with a fresh water cooling system. The normal operating temperature for diesel engines is between 170° F and 190° F. If the engine temperature rises significantly above the normal operating range (10° F), turn OFF the respective engine and contact your Silverton dealer for inspection and repair, if necessary.

- Check the exhaust outlets for the presence of water. Water coming from the exhaust outlets indicates proper water circulation in the engine exhaust system. Water should start coming out of the exhaust outlet shortly after the engine is started. If you do not observe any water coming from the exhaust outlet(s), turn OFF the respective engine and contact your Silverton dealer for inspection and repair, if necessary.

⚠ CAUTION **The exhaust system is raw water cooled. If there is no presence of water in the exhaust outlet(s), the exhaust system may overheat, resulting in serious damage to the engine(s) and the exhaust system components.**

- After both engines have reached their normal operating temperature, increase the RPM's to 2000 and check both voltmeters to be certain they read between 13 and 14.5 volts. The engine voltmeters are located on the Helm Gauge Panel (See **Helm Gauge Layout** on Page 158, which illustrates the location of the voltmeters).

⚠ CAUTION **If the voltmeter(s) read above 15 volts, turn OFF the respective engine(s) as damage to the alternator(s) may result.**

- Visually inspect the engine compartment for fuel, oil and water leaks. If leaks are observed, attempt to locate the source and contact your Silverton dealer for inspection and repair, if necessary.

- Visually inspect the exhaust system for leaks. If any leak is observed, immediately turn OFF the engines and contact your Silverton dealer for inspection and repair, if necessary.

- Check the transmission fluid level. The engines should be running at idle speed and at normal operating temperature. The transmission fluid should read FULL on the “dipstick”. If the fluid level is low, add sufficient transmission fluid to raise the level to the FULL mark or slightly lower. DO NOT overfill. If the fluid level is low, check the transmission(s) for leaks and contact your Silverton dealer for repairs if leaks are noted.

REFER TO THE ENGINE MANUAL INCLUDED WITH YOUR OWNER’S PACKET FOR ADDITIONAL TECHNICAL INFORMATION CONCERNING MAINTENANCE REQUIREMENTS FOR THE SPECIFIC ENGINES WITH WHICH YOUR **352** YACHT IS EQUIPPED.

Bow Thruster

You may have chosen as an option when you purchased your **352 MY**, a **Bow Thruster System**. The purpose of this system is to aid in maneuvering your yacht in close quarters, such as departing or entering a marina boat slip. The **Bow Thruster** propels the bow of your yacht in a Port or Starboard direction, depending on your selection, which is made from a control panel located at the helm station (See photograph below, which illustrates the **Bow Thruster Control Panel**). The **Bow Thruster** operates on DC electrical power, controlled by a breaker switch, located on the Bilge DC electrical panel .

REFER TO THE BOW THRUSTER MANUAL INCLUDED WITH YOUR OWNER’S PACKET FOR ADDITIONAL TECHNICAL INFORMATION CONCERNING THE OPERATION AND MAINTENANCE OF THIS OPTIONAL SYSTEM.

REMOTE CONTROLLED SPOTLIGHT (OPTIONAL)

You may have chosen as an option when you purchased your **352 MY**, a **Remote Controlled Spotlight**, manufactured by *ITT Jabsco* and factory installed at the Silverton plant. The spotlight unit is permanently mounted on the foredeck at the pulpit and operates on the DC electrical system. The system is controlled by a breaker switch described as "Accessory", located on the AC/DC Electrical Panel (See **AC/DC Electrical Panel Layout** on Page 159, which illustrates the location of the "Accessory" breaker switch that controls the **Remote Controlled Spotlight**). The spotlight control panel is located at the helm station and power to and movement of the spotlight is controlled from this remote location (See photographs below, which illustrate the location of the **Remote Controlled Spotlight** and the **Control Panel**).

REFER TO THE *ITT JABSCO* MANUAL INCLUDED WITH YOUR OWNER'S PACKET FOR INFORMATION CONCERNING THE OPERATION AND MAINTENANCE OF THE **REMOTE CONTROLLED SPOTLIGHT**.

SHIFT/THROTTLE CONTROL SYSTEM (MORSE CONTROLS) (OPTIONAL)

You may have chosen as an option when you purchased your **352 MY**, an electronically controlled **Shift/Throttle Control System**, manufactured by *Morse Controls, Inc.* and factory installed at the Silverton plant. The purpose of this system is to provide the operator with smooth, positive shift and throttle operation requiring minimal manual effort. With this system, only one (1) shift/throttle control lever is required per engine; the left control lever operates the Port engine and the right control lever operates the Starboard engine.

The ***Morse*** **Shift/Throttle Control System** is operated on DC electrical power, controlled by a breaker switch located on the AC/DC electrical Panel and described as "Accessory" (See **AC/DC Electrical Panel Layout** on Page 159, which illustrates the location of the "Accessory" breaker switch that controls the ***Morse*** **Shift/Throttle Control System**). The control lever unit is located on the Starboard side of the helm station (See photograph above, which illustrates the ***Morse*** **Shift/Throttle Control Unit**).

REFER TO THE *MORSE CONTROLS, INC.* MANUAL INCLUDED WITH YOUR OWNER'S PACKET FOR ADDITIONAL TECHNICAL INFORMATION CONCERNING THE OPERATION AND MAINTENANCE OF THE ***MORSE*** **SHIFT/THROTTLE CONTROL SYSTEM**.

SHOWER SUMP PUMP SYSTEM

Your **352 MY** is equipped with two (2) showers; one is located in the forward head and the other shower is located in the aft stateroom head (See **Interior Layout** on Page 154, which illustrates the location of both showers). Each shower is equipped with a separate automatic sump pump (See **Mechanical Layout** on Page 155 and 156, which illustrates the location of both shower sump pumps). As the water drains from the shower into the sump pump to a certain level, it raises an automatic switch lever, which activates the shower sump pump and the water is pumped overboard.

The **Shower Sump Pump System** operates on DC electrical power, controlled by individual breaker switches located on the AC/DC electrical Panel (See **AC/DC Electrical Panel Layout** on Page 159, which illustrates the location of the sump pump breaker switches). A separate breaker switch controls each shower sump pump and they operate independently of each other.

General maintenance of the **Shower Sump Pump System** involves periodic cleaning to remove any accumulated debris. Remove the six (6) screws securing the top cover for access to the debris basket and automatic float switch. If you notice that either shower does not drain properly, check the respective sump pump basket for debris and clean, if necessary. If the shower still does not drain properly, check the operation of the pump by manually raising the automatic float switch. If the sump pump is operable, but will not drain properly, check all drain lines for debris and clean as needed. See your Silverton dealer for further inspection and repair if the shower continues to drain improperly.

NOTE: When operating the air conditioner(s) on your **352 MY** (if so equipped), the sump pump breaker switches must be turned ON. Condensation from the air conditioner drains into the **Shower Sump Pump System** and this water is pumped overboard by the sump pumps.

REFER TO THE **WINTERIZATION AND STORAGE SECTION** OF THIS OWNER'S MANUAL FOR THE PROPER PREPARATION AND MAINTENANCE OF THE **SHOWER SUMP PUMP SYSTEM** PRIOR TO SEASONAL STORAGE OF YOUR YACHT.

TRIM TAB SYSTEM

The purpose of the **Trim Tab System** on your **352** yacht is to assist in reaching planing speed as soon as possible and to maintain a proper "running attitude" while in forward motion. "Running Attitude" is defined as the level of the boat, both fore and aft and athwartships, while the vessel is underway. Your yacht, upon reaching planing speed, should rise slightly in the bow and should not list to either side for the greatest stability and fuel economy. Your **352 MY** is equipped with two (2) *Bennett* trim tabs, each measuring 12" x 24", which are mounted on the bottom edge of the transom (See photographs below, which illustrate the location of the Port and Starboard trim tabs).

The **Trim Tab System** operates on DC electrical power controlled by a breaker switch, located on the AC/DC Electrical Panel (See **AC/DC Electrical Panel Layout** on Page 159, which illustrates the location of the breaker switch that controls the **Trim Tab System**). Each trim tab operates independently of each other and they are controlled by separate rocker-type switches, located on the Helm Switch Panel (See **Helm Switch Panel Layout** on Page 158, which illustrates the location of the trim tab switches). Each trim tab is actuated by a hydraulic cylinder, which moves them in an Up or Down position as determined by depressing the rocker-type switches as follows:

- Depressing the TOP of the switch lowers the trim tab.
- Depressing the BOTTOM of the switch raises the trim tab.

The **Trim Tab System** operates in the following manner:

- The function of the trim tab is to redirect the flow of water beyond the bottom of the transom. This creates an upward pressure on the hull bottom at the transom, which results in lowering the bow.
- When the Port trim tab is lowered, the Port stern section is raised, which lowers the Starboard side of the bow.
- When the Starboard trim tab is lowered, the Starboard stern section is raised, which lowers the Port side of the bow.
- Both trim tabs should be lowered/raised as needed to maintain a proper "Running Attitude".

WARNING **Operation of the Trim Tab System may require practice to attain a level of proficiency. DO NOT operate either trim tab to its extreme lowered position suddenly. This may cause the bow to lower to an unsafe position while heading into or away from waves, which may cause "swamping" of your yacht, resulting in possible injury or death. DO operate the trim tab switches with short "bursts" until the desired "Running Attitude" is obtained.**

Maintenance of the **Trim Tab System** is as follows:

- Silverton recommends painting the trim tabs with good quality, antifouling bottom paint. DO NOT paint any hinges or the moving parts of the cylinders.

- To reduce the risk of electrolysis and galvanic corrosion, Silverton recommends the installation of sacrificial zinc anodes on the trim tab plates at least once a year, preferably during preparation for spring launch. DO NOT paint the sacrificial zinc anodes.

- Periodically examine the trim tabs for accumulation of underwater growth and clean as necessary.

- Periodically examine the trim tab pump and hydraulic lines, which are located in the bilge area, for leaks (See Mechanical Layout on Page 155 and 156, which illustrates the location of the trim tab pump). Tighten connections if leaks are noted. If the hydraulic lines appear worn or chafed, contact your Silverton dealer for inspection and replacement, if necessary.

REFER TO THE BENNETT TRIM TAB MANUAL INCLUDED WITH YOUR OWNER'S PACKET FOR TECHNICAL INFORMATION CONCERNING THE OPERATION AND MAINTENANCE OF THE **TRIM TAB SYSTEM**.

CLEANING AND MAINTENANCE

A periodic cleaning and maintenance schedule of the interior and exterior surfaces of your **352 MY** is recommended. Not only will it maintain your yacht in pristine condition, but it will also result in a higher resale or trade-in value when you decide to purchase another Silverton yacht. A clean yacht is both pleasing to the eye and a source of pride in ownership. Cleaning and maintenance of your **352 MY** is described in the following categories:

- Interior Cleaning/Maintenance
- Exterior Cleaning/Maintenance
- Canvas Enclosure Cleaning/Maintenance

Interior Cleaning/Maintenance

There are several different types of surfaces in the interior of your **352 MY** and all require a different method of cleaning. The surfaces and their respective cleaning and maintenance procedures are as follows:

Fiberglass

Wash with a mild soap and water solution. Thoroughly dry with a soft cloth and apply a coat of good quality wax designed for marine use.

CAUTION **DO NOT use abrasive cleaning agents on fiberglass surfaces, as they will scratch and dull the finish.**

Wood

There are many wood surfaces in your **352 MY**, such as galley cabinets, entertainment cabinets and trim. Care and cleaning of the wood surfaces is identical to the maintenance of the wood surfaces in your home. Frequently remove dust from the wood with a feather duster or similar cleaning tool. Apply a good quality furniture polish, such as *Liquid Gold*, to all wood surfaces on a regular basis to maintain their beauty and lustre.

Nautolex (Vinyl)

Gently wash with a mild soap and water solution and dry with a soft, lint-free cloth on a regular basis. DO NOT wait for the vinyl surface to appear soiled before you clean it, as stains and ground-in surface dirt may be difficult to remove.

CAUTION **DO NOT use cleaning agents containing bleach, as they will remove the color tint from the vinyl surface, causing a blotching appearance and will dry the material, resulting in surface cracks.**

Upholstery

The upholstery in your **352 MY** is high quality and stain resistant. Frequently vacuum the upholstery to remove any dirt before it accumulates and becomes imbedded. Stains may be removed by using a quality household stain remover. Be certain to follow the manufacturer's directions concerning its use.

Carpeting

The carpet in your **352 MY** is a high quality nylon pile. Normal cleaning and maintenance is accomplished by vacuuming on a frequent and regular basis. Refer to the carpet manufacturer's pamphlet included with your owner's packet for additional cleaning procedures, such as stain removal.

You may have chosen as an option at the time of purchase of your **352 MY**, a "Central Vac" vacuum cleaning system. Similar to the system in your home, only a removable vacuum hose with cleaning attachments is necessary to vacuum any portion of the interior of your yacht. The "Central Vac" system in your yacht is operated on the AC electrical system with a "Ground Fault Interrupter" circuit for your protection. The vacuum motor and canister (stores the vacuumed soil) are self-contained in one unit and located in the lower portion of the dinette seat (See photograph below, which illustrates the location of the "Central Vac" system). Access to the canister is gained through a panel located on the inboard face of the dinette seat. There is one (1) vacuum hose outlet, which is located on the face of the canister access panel. Refer to the manufacturer's pamphlet included with your owner's packet for specific directions concerning operation of the system.

Corian

The galley and head counter tops and head sinks are manufactured of Corian, which is a superior quality, tough, scratch-resistant material. The Corian surfaces in your **352 MY** are a Matte/Satin finish and are easily cleaned and maintained in the following manner:

Cleaning: Dirt and stains are removed by using a soap and warm water solution. Tough stains may be removed by using an ammonia-based cleaning agent. Watermarks may be removed simply by wiping the surface with a clean, damp cloth and drying with a towel.

Disinfecting: Occasionally wipe the surfaces with a 50/50 water and bleach solution. Rinse with warm water and dry with a towel.

Sink Cleaning and Disinfecting: General cleaning of the Corian sinks is the same procedure as described above. For a more thorough cleaning, occasionally fill the sink with a 50/50 water and bleach solution and let soak for fifteen (15) minutes. As the solution drains, wash the bottom and sides, rinse with warm water and dry with a towel.

Cuts and Scratches: Cuts and scratches may be removed from your Corian surfaces. Refer to the manufacturer's pamphlet included with your owner's packet for the proper procedure.

Exterior Cleaning/Maintenance

The exterior surfaces of your **352 MY** consist primarily of fiberglass, stainless steel, aluminum, safety glass, acrylic plastic and anti-fouling bottom paint. As with the interior surfaces, the exterior surfaces demand frequent cleaning and maintenance and the respective procedures are as follows:

Fiberglass

Wash with a mild soap and water solution, particularly if your yacht is used in salt or brackish water. Always thoroughly wash your yacht after each use in addition to a regular, periodic washing schedule. A more frequent washing schedule may be required, depending on the environment where your yacht is normally docked/moored. A soft scrub brush may be used on the non-skid surface areas. Thoroughly dry with a soft cloth and apply a coat of good quality wax designed for marine use, such as carnauba paste wax. DO NOT apply wax to the non-skid surface areas, as it will render them ineffective. If your boating season is year around, it is recommended a coat of wax be applied every three (3) months. If your boating season is restricted to the summer months, it is recommended a coat of wax be applied prior to spring launch and again at the end of the season prior to winter storage.

⚠ CAUTION **DO NOT use abrasive cleaning agents on fiberglass surfaces, as they will scratch and dull the finish.**

Stainless Steel

The bow rail, aft deck rail, mooring cleats and other hardware on your **352 MY** are manufactured of quality 316L grade stainless steel. Stainless steel will not rust under normal conditions, but it must be properly maintained on a regular basis. Thoroughly wash the hardware with a soap and warm water solution and rinse with fresh water. Dry with a soft cloth to remove any water stains. If discoloration or salt deposits are not removed with normal washing, a non-abrasive household cleaner or stainless steel polishing powder may be used with a soft bristle brush. Always scrub in the direction of the polishing lines imbedded in the stainless steel to avoid scratching the surface. For a superior shine, wipe the stainless steel with a light coat of kerosene, followed by a light coat of lemon oil. The kerosene enhances the lustre and protects the stainless steel and the lemon oil removes the unpleasant kerosene odor. Be careful not to spill or wipe kerosene on the fiberglass surfaces, as it will remove the coat of wax.

⚠ CAUTION **DO NOT use abrasive cleaning agents or steel wool pads or brushes, as these products may scratch and damage the stainless steel finish.**

Aluminum

The windshield and window frames on your **352 MY** are manufactured of aluminum, unless you purchased, as an option, stainless steel frames. The aluminum components are cleaned and maintained in the same manner as the components manufactured of stainless steel.

⚠ CAUTION **DO NOT use kerosene or lemon oil on any painted aluminum surfaces, as they will soften and remove the paint.**

⚠ CAUTION **DO NOT use any abrasive cleaning agents or steel wool products when cleaning aluminum. Aluminum scratches very easily and these products will scratch the surface.**

Safety Glass

The windshield and windows on your **352 MY** are manufactured of safety glass similar to the safety glass found on your automobile. The safety glass on your yacht is much heavier and thicker than the glass on your automobile and meets or exceeds all American Boat and Yacht Council (ABYC) standards. The safety glass may be cleaned with the same soap and warm water solution used for cleaning the exterior surfaces of your yacht and then dried with a soft towel. For a thorough cleaning and to remove all water stains, use a quality window cleaner, such as *Windex*, and dry with a paper towel.

⚠ CAUTION **DO NOT use any abrasive cleaning agents or abrasive cleaning cloths or pads when cleaning safety glass surfaces, as they will scratch the surface.**

Acrylic Plastic

The venturi windshield, which is located on the bridge of your **352 MY**, is manufactured of a tough acrylic plastic. Clean the acrylic plastic surfaces with a mild soap and water solution or non-ammonia based cleaner and dry with a soft cloth.

⚠ CAUTION **DO NOT use any abrasive cleaning agents or abrasive cleaning cloths or pads when cleaning acrylic plastic surfaces, as they will scratch the surface.**

Canvas Enclosure (Optional) Cleaning/Maintenance

The canvas enclosure you purchased as an option from your Silverton dealer consists of canvas fabric, vinyl windows and zippers. An aluminum tubular frame supports the enclosure and it is secured to the bridge and deck with “snaps”. Each of these components require a different cleaning and maintenance procedure and they are as follows:

Canvas Fabric

The canvas should be cleaned on a regular basis before dirt, salt and other deposits accumulate and become imbedded in the fabric. The canvas may be cleaned, without removal from your yacht, while it is in the normal upright position. Brush off any loose dirt and then rinse with fresh water. Wash the fabric with a mild soap and lukewarm (temperature less than 100° F) water solution, rinse thoroughly with fresh water and allow to air dry.

⚠ CAUTION **DO NOT use any cleaning agents containing detergent, as they will remove the protective coating, resulting in stiffness and eventual cracking of the fabric.**

⚠ CAUTION **DO NOT dry the canvas fabric by any means other than air-drying. Use of heated drying apparatus, such as a hair dryer, will result in stiffness and cracking of the material.**

Vinyl Windows

The vinyl windows in your enclosure should be cleaned on a frequent basis to extend their life and maintain clarity. Rinse off any loose dirt with fresh water and wash with a mild soap and cool water solution. After washing, rinse with fresh water and dry with a soft cloth.

⚠ CAUTION **DO NOT use any abrasive cleaning agents or brushes when cleaning your vinyl windows, as they will scratch the material, resulting in poor clarity.**

⚠ CAUTION **DO NOT fold the vinyl windows after removing them from the enclosure. Roll them prior to placing them in storage. Folding the vinyl windows will cause creases and eventual cracking. If you anticipate long-term storage, place a soft cloth over the vinyl window and roll the window with the cloth in place. The cloth barrier will prevent the vinyl from sticking to itself, particularly during warm weather.**

Zippers

The various sections of your canvas enclosure are secured together with zippers to permit easy removal of any or all sections without the cumbersome weight or size of the entire unit. The zippers are manufactured of high impact plastic coated stainless steel and have large teeth for smooth operation. They should be washed while you are washing the canvas and then periodically lubricated by rubbing a candle on the zipper in the closed position and then opening and closing several times to distribute the wax lubricant.

Aluminum Tubular Frame

The upper portion of your canvas enclosure is supported by a tubular aluminum frame. The frame is secured by stainless steel pins placed in brackets that are permanently mounted on the fiberglass surface at various locations on the bridge and deck. The aluminum frame is cleaned and maintained in the same manner as the other aluminum components on your yacht as previously described.

⚠ CAUTION **DO NOT use kerosene or lemon oil on the aluminum frame, as it will stain the canvas fabric. A small amount of lubricant, such as *CRC*, may be used to lubricate the stainless steel pins.**

Two-Piece "Snaps"

The lower portion of your canvas enclosure is secured to the bridge and deck by two-piece "snaps", which are manufactured of chrome-plated brass. The female portion is permanently secured in the lower seam of the canvas and the male portion is permanently secured into the fiberglass surface of the bridge and deck. Frequently examine the snaps for the presence of dirt and remove with a soap and water solution and rinse with fresh water. Periodically lubricate the female portion with a small amount of lubricant, such as *Vaseline Petroleum Jelly*.

WINTERIZATION AND STORAGE

In most cases, the reason for storage of your yacht is winter lay-up. The information contained in this section is a general guide. Your Silverton dealer or a competent boatyard should prepare your yacht for winter storage.

If you are removing your yacht from the water for another reason, use the information in this section as a guideline. Following the procedures in this section will help extend the life of your yacht and its equipment and simplifies recommissioning in the spring.

Indoor storage is beneficial if you are storing your yacht in a climate that produces ice and snow. The storage building should be adequately ventilated and not tightly closed. Ventilation, both around and throughout the yacht, is very important to help prevent the growth of mold and mildew.

If you use outdoor storage facilities, cover your yacht with a cover having provisions for ventilation to keep the yacht from "sweating". Building a frame over the boat to support the cover will allow the passage of air around the yacht. The frame should be a few inches wider than the yacht so the cover will extend beyond the rubrail. The frame should also support the center of the cover and cause it to rise in a slight "teepee" position to allow for water runoff.

NOTE: DO NOT seal the cabin tightly to allow proper ventilation throughout.

Before preparing your yacht for winter storage, thoroughly check the condition of the yacht and its systems and equipment. Note any repairs that may be needed. The need for additional repairs may become apparent during the winterization process. Make arrangements with your Silverton dealer to have the repairs completed.

Cleaning and Preparation For Storage

- Thoroughly clean the hull immediately after removing the yacht from the water. Pressure wash the bottom, if possible, to remove all marine growth. If pressure washing is not possible, thoroughly scrub the hull bottom. Marine growth is much easier to remove while it is still wet.

- Thoroughly clean the remainder of the hull and the deck. Silverton recommends a coat of wax be applied to the hull above the waterline and to the deck for added winter protection.

- Apply rust inhibitor, such as *CRC*, to all metal parts.

- Thoroughly clean the inside of all hull openings, thru-hull fittings and filtration screens (See **Thru-hull Layout** on Page 151 and 152, which illustrates the location of the thru-hull fittings. See **Mechanical Layout** on Page 155 and 156, which illustrates the location of the seawater intake valves). Inspect the hull and underwater gear for signs of wear, deterioration or damage and repair, if possible, before covering and storing your yacht.

- Fill the fuel tanks to prevent condensation and add a good quality fuel preservative (Refer to the fuel preservative manufacturer's recommendation for the proper ratio).

IMPORTANT: DO NOT overfill the fuel tanks so fuel flows from the vent(s). Allow sufficient room in the tanks for fuel to expand.

- Prepare the engines for storage. Refer to the engine manual for winterization and storage procedures.

- Prepare the generator and air conditioners (if so equipped) for storage. Refer to the generator manual and the air conditioner manual, included with your owner's packet, for the proper winterization and storage procedures.

Draining Your Yacht

Your yacht has drain plugs for draining water from the bilge (See **Mechanical Layout** on Page ?, which illustrates the location of the garboard drain plugs). Some compartments in the bilge may not drain completely due to the position of the yacht. Pump these compartments out with a portable pump and then use a sponge to remove all remaining water.

The procedure for draining and winterizing the fresh water system is as follows:

- Drain the fresh water supply tank by opening the hot and cold faucets in the galley for ten (10) minute intervals until the tank is empty.

- Open all faucets in the galley, both showers, both head sinks and the exterior cockpit shower.

- Remove the fresh water filter bowl and strainer. Clean, dry and replace strainer bowl.

- Drain the water heater and remove the cold water intake hose and hot water output hose and hook them together.

- Remove the inlet hose from the fresh water tank (See **Mechanical Layout** on Page ?, which illustrates the location of the fresh water tank) and insert it into a container of non-toxic, fresh water anti-freeze. Turn the fresh water pump ON and starting at the farthest faucet from the pump, turn ON all faucets until the anti-freeze flows out.

- Turn OFF the fresh water pump and reconnect the inlet hose to the fresh water tank.

- Pour non-toxic anti-freeze into all sink and shower drains until the liquid is discharged overboard.

Alternate procedure for draining and winterizing the fresh water system is as follows:

- Drain all water from the fresh water tank.

- Drain all water from the water heater.

- Remove hose from the input side of the fresh water pump and allow to completely drain.

- Remove hose from the output side of the fresh water pump and turn ON all faucets.

- Blow compressed air (15-20 lbs. psi) through the output hose until all water stops flowing from the faucets.

- Leave water lines at the fresh water pump disconnected to allow any trapped water vapor to drain and evaporate.

The procedure for draining and winterizing the marine sanitation system is as follows:

- Drain all water lines into the waste holding tank. Continue to flush fresh water into the waste holding tank and pump out into an approved waste facility until thoroughly clean.

- Add non-toxic, freshwater anti-freeze to the waste holding tank by flushing through the toilet.

- Run the macerator pump to allow anti-freeze to flow through the pump and the input/output lines.

- Remove the drain plug from the macerator seacock while the valve is closed and allow the line to drain. Replace the drain plug.

- Thoroughly clean the toilet and leave the bowl exposed to prevent mildew.

- Remove all seacock and strainer drain plugs to prevent from freezing. Close all seacocks.

Seacocks

- Engines
- Head System (Intake)
- Head System (Macerator pumpout)
- Generator (if equipped)
- Air Conditioners (if equipped)

Strainers

- Engines
- Fresh Water System
- Generator (if equipped)
- Air Conditioners (if equipped)

Battery Storage

The procedure for battery winterization and storage is as follows:

- Turn battery switch to OFF.

- Remove engine batteries and generator battery (if so equipped) from their respective compartments (See **Mechanical Layout** on Page 155 and 156, which illustrates the location of the engine and generator batteries).

- Place batteries on a wooden pallet or bench and store in an area where temperatures remain above freezing.

IMPORTANT: DO NOT store batteries on a concrete surface, such as a garage floor, as they will tend to discharge.

- Keep batteries fully charged during storage. Periodic charging (once a month) with a battery charger set on a low amperage charge is recommended. Check the battery electrolyte levels regularly. Add electrolyte, if needed.

REFER TO THE BATTERY LITERATURE INCLUDED WITH YOUR OWNER'S PACKET FOR ADDITIONAL INFORMATION CONCERNING THE CARE AND STORAGE OF YOUR BATTERIES.

Interior Preparation

The procedure for preparing the interior of your yacht for winter storage is as follows:

- Remove all items that will hold moisture (towels, PFD's, blankets, clothing, canvas, etc.) from the interior of the yacht to prevent mold and mildew formation.

- Remove all electronic equipment and items of value that are detachable.

- Remove all garbage and trash.

- Thoroughly clean the interior of your yacht. Clean all cabinets, drawers and cupboards. Allow the cabin area to air dry for at least one day, if possible.

- Stand or prop up all mattresses and cushions that are to remain on board during storage to allow air circulation around them.

- Place *Mildew Pacs* in various locations within the interior of your yacht to help prevent mold and mildew formation during storage (Refer to the manufacturer's recommendation for the quantity and location required).

Lifting Your Yacht

The following are guidelines that will help prevent damage to your yacht as it is being lifted:

- Never lift the yacht with a greater than normal accumulation of water in the bilge. All tanks containing fresh water should be empty.

- Place lifting slings where indicated by the sling tab labels on the gunwales (See **Thru-hull Locations Layout-Port and Starboard** on Page 151 and 152, which illustrates the location of the sling tab locations). Avoid placing slings where they may lift the propeller shaft or other underwater fittings. Padding, placed under the slings at the chine corners, will help to keep pressure to a minimum at this location.

- Disconnect the propeller shafts at the transmissions to prevent damage to the transmissions and shafts.

- Use wide, flat, lifting slings made of belting and spreader bars long enough to keep pressure off of the gunwales.

⚠ CAUTION **DO NOT use slings made of cable. Pressure caused by the slings on the gunwales can cause severe gelcoat crazing or more serious hull damage. The spreader bar at each lifting sling should be at least as long as the distance across the widest point the sling surrounds.**

- If a marine railway or platform hoist is being used, locate and adjust the blocking to distribute the weight over several areas. The weight borne by the keel must not be so great as to cause crushing or distortion of the member.

- When lifting the yacht, keep the bow higher than the stern so the engine and generator (if so equipped) exhaust lines can drain. This will prevent water from flowing forward through the manifold and into the engine itself, where it may become trapped.

⚠ CAUTION **Always keep the bow higher than the stern every time the yacht is lifted. DO NOT lift the stern higher than the bow at any time as this may cause water to enter the engines. Engine failure is possible if water enters the engine cylinders. The water can cause "hydrostatic lock" and bend the piston rods. "Hydrostatic lock" is a situation where the piston cannot travel to its full upward position due to the presence of a liquid above the piston and extreme pressure is forced downward as the piston moves upward. Even a small quantity of water can cause rust or other internal engine damage.**

NOTE: Silverton recommends an optional storage cradle with the purchase of your yacht. The cradle is factory made to conform to the bottom of your yacht for safe storage and minimizes the risk of hull distortion.

OPERATING YOUR YACHT

Most people who purchase a Silverton yacht have boat handling knowledge and experience with other types of vessels. This section of the Owner's Manual provides basic information concerning the safe operation of your yacht and is a review of the information contained in each of the "Systems Sections". Be certain to read and have a thorough understanding of all systems described in this Owner's Manual BEFORE you operate your yacht. Even if you are an experienced yachtsman, you can benefit from reviewing the information contained in this section.

The first cruise on your new Silverton yacht should be a time for you to become acquainted with the vessel. Before you depart on your first cruise, you should be able to answer **YES** to the following questions:

- Has your Silverton dealer completed the "Pre-Delivery Service Inspection"?
- Have you and your Silverton dealer signed the "Pre-Delivery Service Record"?
- Have you completed and mailed all warranty registration cards?
- Have your read and do you have a complete understanding of this Owner's Manual and the O.E.M. Manuals included with your owner's packet?
- Does your yacht's safety equipment comply with all United States Coast Guard and local regulations?
- Is your safety equipment in operable condition and accessible, if needed?
- Has your Silverton dealer reviewed the operation of your yacht and its systems with you?
- Has your Silverton dealer answered all of your questions concerning the operation of your yacht and all of its systems?

If you have completed the above preliminary steps, you are ready to take your first cruise. Before you depart, give some thought to the cruise itself. Choose a calm day, if possible, and take only those people who will be members of your regular crew. Leave guests on shore, so that you are able to concentrate on learning as much as possible about your new Silverton yacht without unnecessary distractions.

Engine Startup Preparation

Prior to your initial or first seasonal engine startup, follow the below listed procedures:

- Be certain all electrical circuit breaker switches are turned OFF.
- Raise the engine compartment access hatch and use your sense of smell to detect any fuel fumes.

If **ANY** fuel fumes are detected:

- Evacuate your yacht **IMMEDIATELY**.
- Notify the dockmaster.
- Open all hatches, doors and windows to provide natural ventilation.

- Have a qualified marine technician examine your yacht immediately to determine the source of the fuel fumes.

- If a leak is detected, have it repaired as soon as possible by a competent technician.

- If you do not detect any fuel fumes, open all hatches, doors and windows to ventilate your yacht.

- Visually examine the engines and generator (if so equipped) for any oil leaks. If leaks are noted, have them repaired by a competent technician.

- Examine the bilge area for water accumulation. Remove excess water and locate the source of the water. Remember, a small quantity of water in your bilge is normal.

Turn ON the following switches:

- Both battery switches.
- DC Electrical Panel main breaker switch.
- Helm electronics breaker switch.
- Helm accessory breaker switch.

- Visually examine the fire extinguisher system in the engine compartment to be certain it has not been discharged.

- Check the engine oil level. Refer to the Engine Manual for specific instructions concerning the proper oil level and filling procedure.

- Check the transmission fluid level. If the level is low, add fluid, but **DO NOT** overfill. Be certain the fluid level is below the full mark on the dipstick when the transmission is cold. The fluid will expand as it warms and will overflow if the level is too high.

- Check the generator (if so equipped) oil level. Refer to the Generator Manual for specific instructions concerning the proper oil level and filling procedure.

- If your yacht is equipped with fresh water cooled engines, remove the pressure cap from the heat exchangers and check that the coolant is filled to the neck of the filler tube. If coolant is low, refer to the Engine Manual for proper filling instructions.

- If your yacht is equipped with diesel engines, refer to the Engine Manual for the proper procedure for checking the coolant level and the proper antifreeze/water ratio.

- Open both raw water intake valves. The valves are in the open position when the handle is parallel to the valve body.

- Remove raw water strainer cap and check for debris. Remove any debris noted.

- If your yacht is equipped with a generator, be certain there is no debris in the water strainer. Remove any debris noted.

- Examine the propeller shaft stuffing boxes for excessive water leakage. One drop of water every sixty (60) seconds is normal.

- Open the fuel shutoff valves for the engines and generator. The valve is in the open position when the handle is parallel to the valve body.

- Check the oil level in the trim tab reservoir and be certain the level is between the FULL and ADD marks.

Engine Startup

IMPORTANT: Always be very careful when starting your engines. Use common sense and good judgement. Turn OFF the engine(s) immediately if you observe any unsafe operating condition.

The below listed procedures should be followed when starting your engines:

- Operate the bilge blower motors for five (5) minutes before starting your engines.

- Place shift control levers in the neutral position.

- Place throttle control levers in the "down" position.

- Turn ignition switch to ON, but not to START. Be certain the engine oil pressure alarm sounds and the Automatic Fire Extinguisher System indicator light is ON.

- Turn ignition switch to START and hold until the engine starts. Release the ignition switch immediately after the engine starts. If the starter motor does not operate when you turn the ignition switch to START, the neutral safety switch may be out of adjustment. Carefully move the shift control lever up and down slowly until the starter motor operates. Have a competent technician adjust the neutral safety switch as soon as possible.

CAUTION **If the engine fails to start within thirty (30) seconds, release the ignition switch. Allow the starter motor to cool for at least sixty (60) seconds and then try again to start the engine. Prolonged starting attempts may result in starter motor overheating and damage.**

CAUTION **Failure to release the ignition switch from the START position after the engine starts may result in serious damage to the starter motor and/or engine flywheel.**

- If one of the batteries is not sufficiently charged to start the engine, start the engine with the fully charged battery first. Start the other engine using the "Parallel Start" switch, which draws power from both batteries. Release the parallel start switch immediately after the engine starts.

CAUTION **DO NOT continue to depress the "Parallel Start Switch" after the engine has started. Damage to the alternator(s) may result.**

- Be certain the oil pressure is between 30 and 50 psi (gasoline engines) or 35 and 70 psi (diesel engines). If the oil pressure is low, turn OFF the respective engine immediately.

- Allow the engines to operate at the recommended RPM's as specified in the Engine Manual until they reach normal operating temperature. Normal operating temperature for gasoline engines

equipped with a fresh water cooling system is 170° F and if equipped with a raw water cooling system, 140° F. Normal operating temperature for diesel engines is between 170° F and 190° F.

- Check for water discharging from the exhaust outlets. The presence of water indicates water circulation in the exhaust cooling system. Water should discharge through the exhaust outlets immediately after the engine starts.

- After engines reach their normal operating temperature, increase the RPM's to 2000. Be certain the voltmeters read between 13 and 14.5 volts.

- Visually inspect the exhaust system for leaks. If any leaks are detected, immediately turn OFF the respective engine and contact a competent technician for repair.

- Check the transmission fluid level after the engine is warm. The transmission should be in neutral and the engines operating at idle speed. Transmission fluid should be at or slightly below the FULL mark on the dipstick. Add transmission fluid if the level is low, but **DO NOT** overfill.

Shakedown Cruise

Silverton recommends a shakedown cruise after the initial or seasonal startup. This will test the engines and various systems under normal operating conditions. Note any condition that does not meet normal operating performance standards. Repair any condition noted as soon as possible.

IMPORTANT: Before fueling your yacht, be certain you have read and have a thorough understanding of the information contained in the **"Fuel System" Section** of this Owner's Manual. It contains valuable information and cautions for your safety and the safety of your passengers.

Check the following for proper operation during your shakedown cruise:

Air Conditioner(s): If your yacht is equipped with an air conditioning system, be certain each air conditioner is operating properly.

Engines: Be certain both engines are capable of obtaining their maximum RPM range. Check for fuel, oil and water leaks. Check the exhaust system for leaks.

Generator: If your yacht is equipped with a generator, be certain it starts and operates properly. Check for oil, water and exhaust system leaks.

Instruments: Be certain that all instruments operate properly and provide normal readings.

Steering: Check that the steering system is responsive.

Shift and Throttle Controls: Be certain the shift and throttle controls operate properly and are in the proper adjustment.

Transmissions: Check that both transmissions shift smoothly and positively.

Trim Tabs: Check that the trim tabs operate properly and are responsive to your use of the controls.

After completing your shakedown cruise, recheck all fluid levels. Check all drive belts for the proper tension. Generally examine

all components to be certain they did not loosen during the cruise. Make all adjustments as necessary.

WARNING **DO NOT remove the cooling system filler cap when the engine is hot. Allow the engine to cool and then remove the pressure cap slowly, allowing the pressure to vent. Hot coolant, under pressure, may discharge violently and result in serious personal injury and burns.**

Getting Underway

After your engines have warmed to normal operating temperature, you are ready to depart your dock/mooring. Check the wind, tide and current to determine the best way to safely maneuver your yacht away from the dock. Cast off all mooring lines.

Shift the transmissions into forward or reverse, depending on which way you want to depart your dock. Your engines should be at idle speed while departing your dock and power should only be used if necessary for control of your yacht.

Once your yacht has departed the dock and is in open water, accelerate to cruising speed (RPM's) as recommended in the Engine Manual.

Be certain to follow all safety precautions as mentioned in the "Boating Safety" Section of this Owner's Manual while operating your yacht.

Daily Engine Shutdown

After you have completed your cruise and secured your yacht to the dock, shut down the engines in the following manner:

- Reduce engine speed to idle.
- Place transmission controls in neutral.
- Allow engines to operate at idle speed for several minutes.
- Turn ignition switches to the OFF position to shut down the engines.
- Operate the bilge blower motors for several minutes to circulate fresh air through the engine compartment.
- Turn OFF battery switches.

SIXTEEN WAYS TO REDUCE FUEL CONSUMPTION

1. Keep the bottom of your yacht clean. A fouled bottom can increase drag up to 10% or more. A 10% increase in drag is equivalent to a 10% increase in fuel consumption.
2. DO NOT idle your engines needlessly. Depart your dock/mooring after warm-up.
3. Watch your trim. A well balanced yacht gets on plane faster, handles better and runs with less surface contact.
4. Navigate better. By plotting courses to your destination instead of just waiting for them to appear somewhere in front of you, you can eliminate miles off of your distance and gallons off of your fuel consumption.
5. Know your fuel consumption. By plotting a fuel consumption/RPM curve for your yacht, you will probably find that reducing your engines' RPM's 10% can often reduce your fuel consumption 30% with only a slight reduction in speed.
6. Remove extra weight. If you are not going to use it, do not carry it aboard. Any extra weight requires more fuel to move your yacht. Do not just stop at the lockers. Remember that water weighs 64 pounds per cubic foot, so keep the bilge areas dry.
7. Improve your yacht handling ability. DO NOT let the yacht labor along below a planing attitude. This is the absolute peak of fuel waste.
8. Purchase good quality fuel. Be certain you are using the correct fuel for your engine.
9. Load your yacht correctly. DO NOT put all of the heavy gear, such as anchors, chain, canned goods and spare parts exclusively in either the bow or stern. Heavy items should be placed amidships where they will not affect the trim and plane of the yacht.
10. Check the drive train. An inboard engine that is improperly aligned can cost you money. Check to see if the transmission has sufficient fluid (too little increases friction), if the stuffing box is too tight (increases the load on the engine) or if a bent rudder or propeller are robbing you of economy. Be certain the rudders are properly aligned.
11. Check the engine cylinder compression. Low compression indicates worn piston rings or valves which will consume oil and reduce engine power.
12. Check the engine idle speed. For the times it is necessary to operate at idle speed, be certain the engine is not running too fast and using unnecessary fuel.
13. Check the engine operating temperature. Compare your normal operating temperature with the range specified in the Engine Manual and in this Owner's Manual. An overheating engine will cause excessive wear and will be less efficient.
14. Keep the engine and transmission oil clean. Dirty oil causes varnish to form on the moving surfaces of the engine/transmission. Varnish can cut into the piston ring seal and contribute to fuel waste. Varnish will cause the transmission to "slip".

15. Check for engine air leaks. A leak in the engine intake manifold disturbs the air/fuel mixture and reduces your performance. A leak in the exhaust manifold is DANGEROUS. Carbon Monoxide Gas (CO) could enter the cabin area of your yacht.

DANGER **Carbon Monoxide Gas (CO) is colorless, odorless and tasteless. It is highly poisonous, endangering lives even at very low levels of concentration. Mild exposure causes headaches and fatigue, often resembling "flu-like" symptoms. Medium exposure causes severe headaches, drowsiness, nausea and rapid heart rate. Extreme exposure results in unconsciousness, convulsions, cardiorespiratory failure and death. If Carbon Monoxide Gas (CO) is detected in your yacht, immediately contact a qualified technician to locate and repair the source of the poisonous gas. DO NOT enter your yacht until repairs have been made and the Carbon Monoxide Gas (CO) is lowered to an acceptable level.**

16. Keep hot water use to a minimum. The less hot water you use, the less time your generator will have to run, resulting in lower fuel consumption.

GLOSSARY

ABAFT: Toward the rear of the yacht.

ABEAM: At right angles to the yacht's keel.

ABOARD: On the yacht.

ABREAST: Side by side.

ADRIFT: Loose. Not on a mooring or tow line.

AGROUND: Stuck fast on the bottom.

AHEAD: In a forward motion.

Amidships: (1) The area midway between the bow and the stern of the yacht. (2) The area between the Port and Starboard side of the yacht.

AMPERE: The standard unit to measure the strength of electrical current.

ASTERN: (1) In the rear area of the yacht. (2) Direction of travel when the yacht moves in reverse.

ATHWARTSHIP: Movement from Port to Starboard or Starboard to Port.

BEAM: (1) The widest distance across the yacht. (2) A transverse structural member that stiffens and supports a portion of the deck.

BILGE: The interior area of the hull below the waterline.

BILGE PUMP: A pump used to remove water that has drained into the yacht's bilge.

BOW: The forward end of the yacht.

BOW LINE: A docking line leading from the yacht's bow.

BULKHEADS: The interior walls of the yacht.

CAST OFF: Let go.

CHINE: The point where the bottom and side of the hull meet.

CHOCK: A fitting or hole through a yacht's deck through which a mooring or anchor line is routed.

CIRCUIT BREAKER: A device used to interrupt an electrical current when the current flow exceeds a predetermined level.

CLEAT: A fitting on a yacht's deck on which a mooring or anchor line is tied.

COCKPIT: An exposed aft deck area substantially lower than the forward adjacent deck.

COMPANIONWAY: The steps or ladder leading from the deck to the cabin of the yacht.

COMPARTMENTS: Rooms or spaces divided by bulkheads.

CRADLE: A wooden framework used to support a yacht when it is on land.

CURRENT: The movement of water.

DEAD AHEAD: Directly in front of the yacht.

DINGHY: A small open boat used for ship to shore transportation.

DISPLACEMENT: The weight of the water displaced by the yacht's hull.

DRAFT: (1) The depth of a yacht from the actual waterline to the bottom of the lowest part, such as the propeller tip or rudder. (2) The depth of water necessary to float a yacht.

EVEN KEEL: To be floating evenly without listing to either side.

EXHAUST SYSTEM: The means by which the hot engine or generator gases are removed from the engine and released into the atmosphere.

FATHOM: Six (6) feet.

FENDER: A rubber or plastic device used to absorb impact between vessels or a vessel and a dock.

FLARE: (1) Outward curve of the hull as it rises up the side from the waterline. (2) A pyrotechnic device used for emergency signaling.

FLOTSAM: Refuse that floats when discharged overboard. See "Jetsam".

FLYING BRIDGE: The uppermost steering station from which a yacht is controlled.

FORE-AND-AFT: A line, or anything else, that runs parallel to the longitudinal center of the yacht.

FORWARD: Toward the bow of the yacht.

FREEBOARD: The vertical distance from the waterline to the sheerline (rubrail).

GALLEY: The kitchen area of the yacht.

GASKET: A strip of sealing material used to make joints fluid tight.

GELCOAT: The thin outer layer of pigmented plastic-like substance used to cover exposed fiberglass components.

GLAND: The moveable part of the stuffing box which compresses the packing when tightened (also referred to as the "packing gland").

GROUND: (Electrical) The electrical potential of the earth's surface, which is zero.

GUNWALE: The horizontal surface of the deck immediately above where it meets the hull.

HATCHES: Covers the openings in a deck or floor.

HATCHWAY: Access port through the deck.

HARDTOP: A permanent cover over the cabin or cockpit.

HAWSER: A heavy rope used for mooring or towing.

HEAD: A toilet or bathroom.

HEADING: The direction that a vessel is travelling with reference to true, magnetic or compass north.

HEADWAY: The forward motion of a vessel through the water.

HEEL: To tip or tilt to one side by means of an external force.

HELMSMAN: The person steering the yacht.

HULL: The main body of the yacht.

INBOARD: (1) From either the Port or Starboard side to the centerline of the yacht. (2) The dock side of a moored yacht.

JETSAM: Refuse that sinks when discharged overboard. See “Flotsam”.

KEEL: The centerline of a yacht running fore and aft at the lowest point of the hull.

KNOT: (1) A Maritime unit of speed equal to 1.15 miles per hour. (2) A term for hitches and bends in a line of rope.

LAZARETTE: Storage compartments below the deck at the stern of the yacht.

LIST: A vessel that inclines to Port or Starboard by its own means.

LONGITUDINAL: Lengthwise.

MOORING: An arrangement for securing a yacht to a mooring buoy or pier.

NAVIGATIONAL LIGHTS: A set of red, green and white lights which indicate the presence of a vessel and must be illuminated between the hours of dusk and dawn and during times of restricted visibility (fog, rain, snow, etc.).

OVERHEAD: The ceiling or roof of a yacht.

OUTBOARD: (1) From the centerline of a yacht to the Port and Starboard sides. (2) The seaward side of a moored yacht.

PASSAGEWAY: A corridor or hallway aboard ship.

PERSONAL FLOTATION DEVICE (PFD): Life preserver or life vest.

PIER: A loading platform that extends at an angle from the shore.

PILING: Support or protection for wharfs, piers, etc.

PITCH: (1) The vertical motion of a yacht in a seaway about the athwartship axis. (2) The axial advance in inches of a propeller during one complete revolution.

PLANING HULL: At slow speeds, a planing hull will displace water in the same manner as a displacement hull. As speed increases, the hull provides a lifting effect up onto the surface of the water.

PORT: (1) Looking forward, the left side of a yacht from bow to stern. (2) A harbor.

PORT BEAM: The left center of a yacht.

PORT BOW: Looking forward, the front, left side of the bow.

PORT QUARTER: Looking forward, the left rear section of a yacht.

QUARTER: The sides of a yacht aft of amidships.

QUARTERING SEA: Sea (waves) coming from a yacht’s quarter.

RODE: The anchor line or chain.

RUNNING LIGHTS: Refer to “Navigational Lights”.

RUDDER: A vertical plate used to steer the yacht.

SALON: The main social cabin of a yacht.

SCREW: A propeller.

SCUPPER: A drain from the edge of the deck or cockpit that discharges overboard.

SEACOCK: A positive action shut-off valve connected directly to the hull seawater intake valve.

SHAFT: The long round member that connects the transmission to the propeller.

SHAFT LOG: A fitting at the hull bottom where the propeller shaft penetrates the hull. The shaft log permits rotation of the shaft while simultaneously preventing water from entering the hull.

SHEER: The top of the hull from bow to stern. The point where the hull meets the deck.

SHEER STRAKE: The upper edge of the hull immediately below the deck.

SOLE: Term used to refer to the cockpit floor or floor of the cabin.

SPRING LINE: A pivot line used in docking or to prevent the yacht from moving forward or astern while made fast to a dock.

STARBOARD: Looking forward, the right side of a yacht from bow to stern.

STARBOARD BOW: Looking forward, the front, right side of the bow.

STARBOARD QUARTER: Looking forward, the right rear section of a yacht.

STEM: The leading edge of a yacht's hull.

STERN: The rear of a yacht.

STRINGER: A fore and aft continuous member located in the bottom of the hull used to provide longitudinal strength.

STRUT: A propeller shaft support that is below the hull. The main strut is a large strut that is mounted immediately forward of the propeller. An intermediate strut is smaller than the main strut and is mounted between the main strut and the shaft log.

SUMP: A pit or well into which water is drained.

SUPERSTRUCTURE: A flying bridge or other structure that extends above the deck.

TOPSIDE: To go to the uppermost deck.

TRANSOM: The stern cross section of a yacht.

UNDERWAY: A vessel that is not moored, docked, at anchor or aground.

V-BOTTOM: A hull with the bottom section that is in the shape of a "V".

V-DRIVE: A drive system that has the output of the engine facing forward and is coupled to a transmission, which then changes the output aft.

WATERLINE: The line of water on the hull when the boat is afloat and at rest.

WEATHER DECK: A deck with no overhead protection.

WINDLASS: A device used to raise and lower an anchor.

WARNING LABELS

THE FOLLOWING WARNING LABELS APPEAR AT VARIOUS LOCATIONS ON YOUR **352 MY** AND ARE SELF-EXPLANATORY. BE CERTAIN TO FAMILIARIZE YOURSELF AND YOUR PASSENGERS WITH THESE WARNING LABELS AND THEIR CONTENTS.

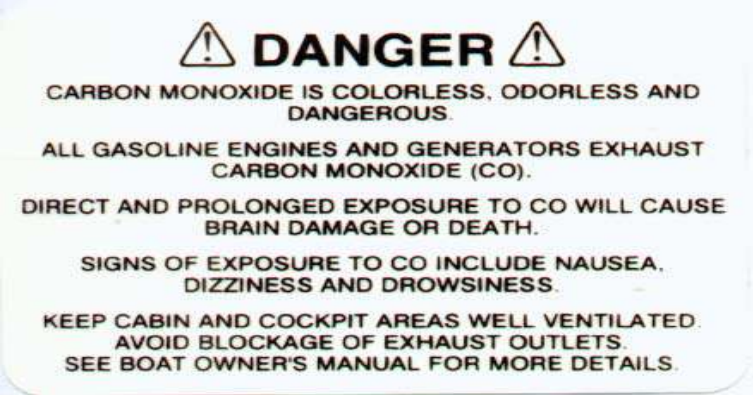

IDENTIFICATION LABELS

THE FOLLOWING LABELS IDENTIFY THE LOCATION OR OPERATING PROCEDURE OF CERTAIN ITEMS ON YOUR **352 MY** THAT ARE DESIGNED TO ASSIST YOU AND INCREASE YOUR YACHTING PLEASURE.

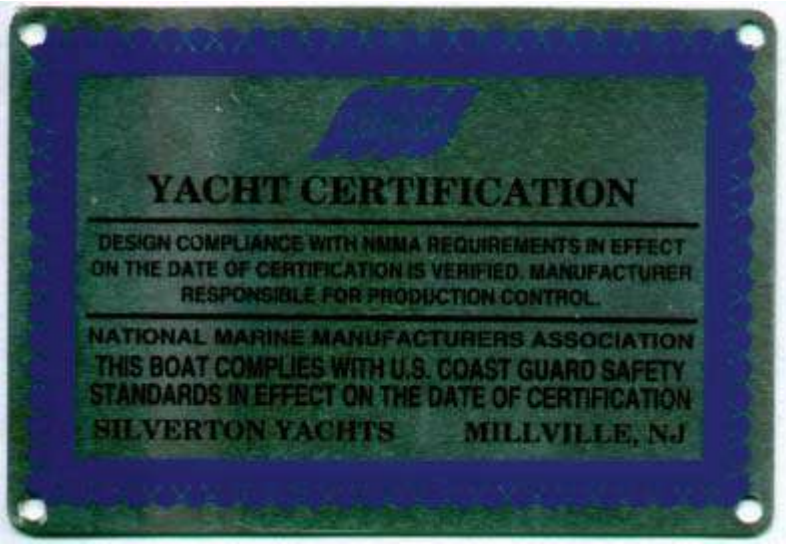

FLOAT PLAN

Name of Operator_____ Telephone Number(___) _____

Address_____

Description of Boat:_____

Name_____ Make_____Model_____

Length_____Hull Color_____Deck Color_____

Distinguishing Features _____

Registration No._____ Home Port_____

Name, Address, Telephone Number, and Age of Persons Aboard:

_____

_____

_____

_____

Safety Equipment: ___ PFD's ___ Flares ___ Mirror ___ Flashlight
___ Food ___ Water ___ EPIRB ___ Raft/dinghy

Fuel Capacity_____ Water Capacity_____

Engine Make_____ Model (Size)_____ H.P._____

Radio Type_____ Radio Frequencies_____Call Letters_____

Departed From_____ Date____/____/_____ Time ____:____ AM PM

Destination_____ Date___/___/_____

Stops_____

If not returned by_____ , call the Coast Guard or: _____

at:_____

Float Plan filed by (name)_____ at (place)_____(date)___/___/_____

MAINTENANCE LOG

Date	Maintenance Performed	Hourmeter

MAINTENANCE LOG

Date	Maintenance Performed	Hourmeter

BOAT RECORD

The Boat Record is provided to record information about the yacht and its components. This record should be filled out by the selling Dealer at the time of delivery.

Owner's Name_____ Phone (____)_____

Address_____

Dealer_____ Phone (____)_____

Address _____

Boat Name_____Hull Number* US STNE_____

Delivery Date_____/_____/_____ Registration Number_____

Length_____ Beam_____ Draft_____

Approx. Displacement _____ lbs.

Approx. Height Above Waterline _____

DOCKSIDE INFORMATION

Fuel Capacity_____ Fuel Type_____ Fuel Filter_____
Engine Oil Type_____ Oil Filter_____
Generator Oil Type_____ Oil Filter_____
Transmission Oil Type_____ Oil Filter_____

ENGINE AND TRANSMISSION

Engine Mfr._____ Model_____
Engine Serial no. Port_____ Stbd._____
Transmission Mfr._____ Model_____
Transmission Serial No. Port_____ Stbd._____

GENERATOR

Manufacturer_____Model No._____Serial No._____

PROPELLER AND SHAFTS

Propeller Mfr._____ Model _____
No. Blades_____ Bore _____ Diameter_____ Pitch_____ Cupped_____
Shaft Length_____ Diameter_____

BATTERIES

Battery Mfr. _____ Model_____
Rating: Engine_____ Generator _____

* The Hull Identification Number is located on the outside of the transom, on the starboard side, upper corner.

Note: The following is provided for your use in recording electronic equipment which you may add to your yacht. All equipment should be recorded so that the information is available in case of repair or for any insurance claim.

Electronic Equipment

Item:_____
Manufacturer_____Model no._____Serial no._____

Item:_____
Manufacturer_____Model no._____Serial no._____

Item:_____
Manufacturer_____Model no._____Serial no._____

Item:_____
Manufacturer_____Model no._____Serial no._____

Item:_____
Manufacturer_____Model no._____Serial no._____

Item:_____
Manufacturer_____Model no._____Serial no._____

Item:_____
Manufacturer_____Model no._____Serial no._____

Item:_____
Manufacturer_____Model no._____Serial no._____

Item:_____
Manufacturer_____Model no._____Serial no._____

Item:_____
Manufacturer_____Model no._____Serial no._____

Item:_____
Manufacturer_____Model no._____Serial no._____

Item:_____
Manufacturer_____Model no._____Serial no._____

Item:_____
Manufacturer_____Model no._____Serial no._____

Item:_____
Manufacturer_____Model no._____Serial no._____

Item:_____
Manufacturer_____Model no._____Serial no._____

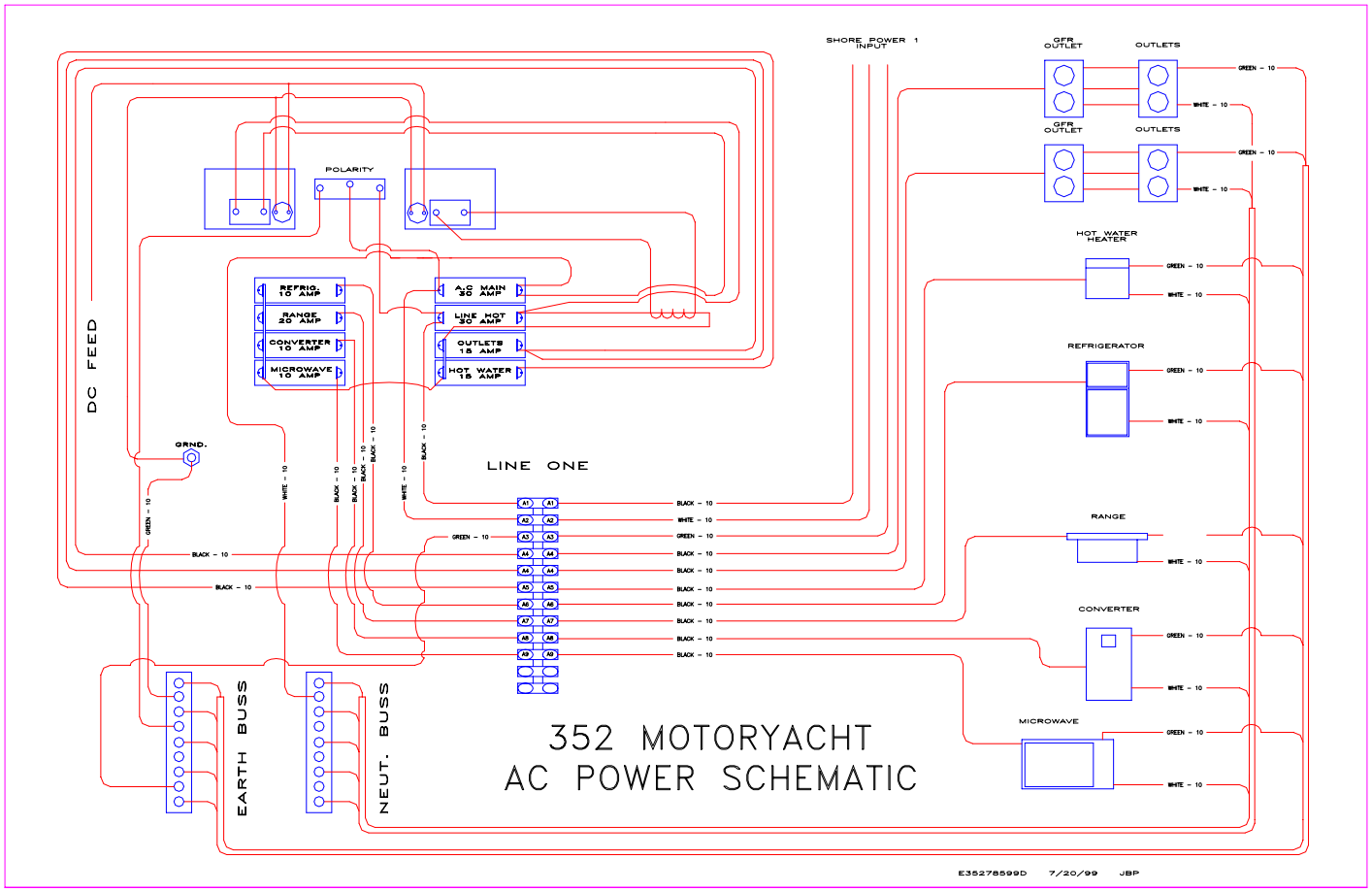

REVISIONS				
ZONE	REV	DESCRIPTION	DATE	APPROVED

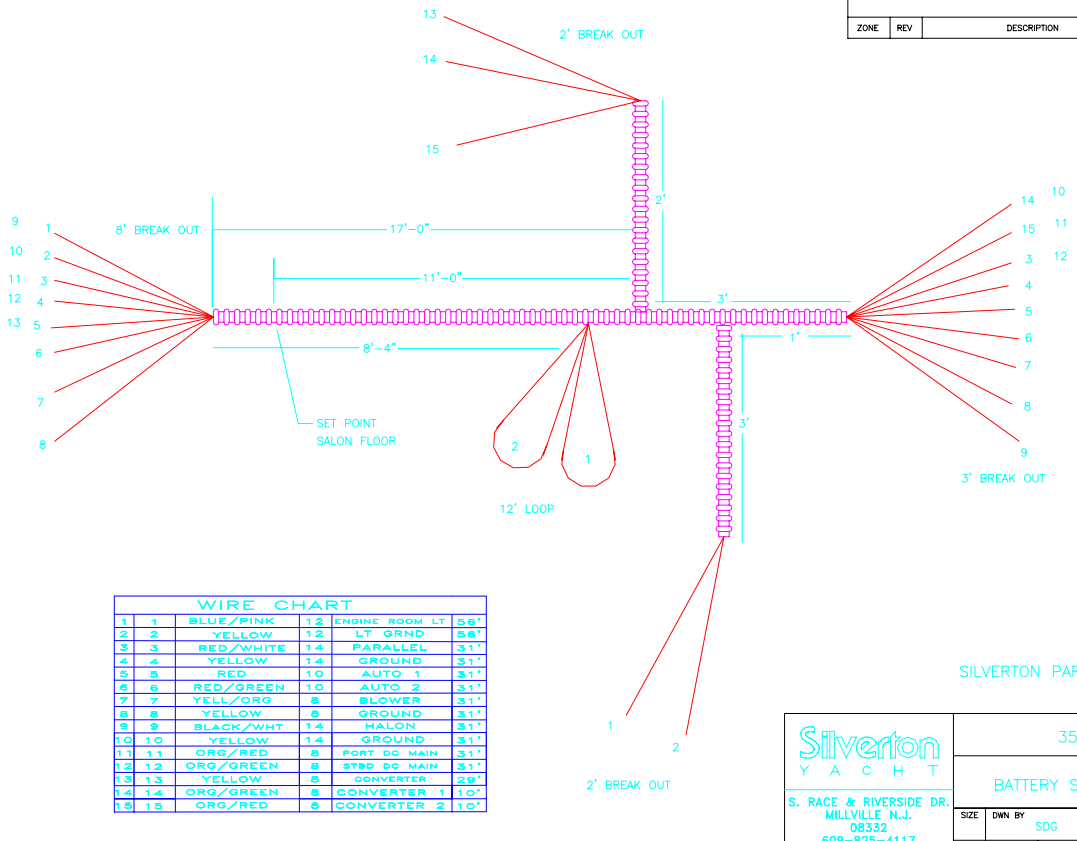

SILVERTON PART NO. 005 – 6368

WIRE CHART					
1	1	BLUE/PINK	12	ENGINE ROOM LT	58'
2	2	YELLOW	12	LT GRND	58'
3	3	RED/WHITE	14	PARALLEL	31'
4	4	YELLOW	14	GROUND	31'
5	5	RED	10	AUTO 1	31'
6	6	RED/GREEN	10	AUTO 2	31'
7	7	YELL/ORG	8	BLOWER	31'
8	8	YELLOW	8	GROUND	31'
9	9	BLACK/WHT	14	HALON	31'
10	10	YELLOW	14	GROUND	31'
11	11	ORG/RED	8	PORT DC MAIN	31'
12	12	ORG/GREEN	8	STBD DC MAIN	31'
13	13	YELLOW	8	CONVERTER	29'
14	14	ORG/GREEN	8	CONVERTER 1	10'
15	15	ORG/RED	8	CONVERTER 2	10'

Silverton YACHT
S. RACE & RIVERSIDE DR.
MILLVILLE N.J.
08332
609-825-4117
(FAX) 609-825-2898

352 MOTOR YACHT

BATTERY SWITCH JUMPER HARNESS

SIZE	DWN BY	DWG NO.	REV
	SDG	E35275999B	
SCALE		SHEET	

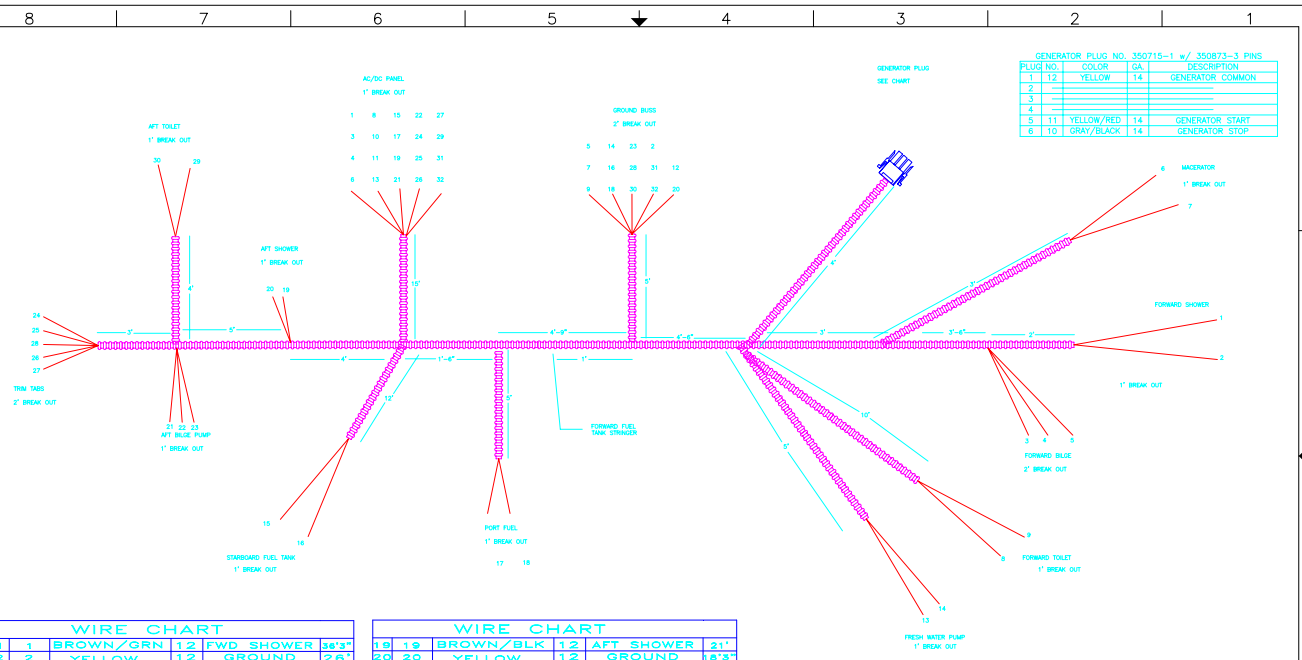

GENERATOR PLUG NO. 350715-1 w/ 350873-3 PINS

PLUG	NO.	COLOR	GA.	DESCRIPTION
1	12	YELLOW	14	GENERATOR COMMON
2				
3				
4				
5	11	YELLOW/RED	14	GENERATOR START
6	10	GRAY/BLACK	14	GENERATOR STOP

WIRE CHART

1	1	BROWN/GRN	12	FWD SHOWER	36'3"
2	2	YELLOW	12	GROUND	26'
3	3	BROWN/RED	12	FWD BILGE PUMP	35'3"
4	4	BROWN/WHT	12	FWD BILGE PUMP	35'3"
5	5	YELLOW	12	GROUND	25'
6	6	WHITE	10	MACERATOR	33'9"
7	7	YELLOW	10	GROUND	18'6"
8	8	RED/YELLOW	6	FWD TOILET	27'9"
9	9	YELLOW	6	GROUND	22'6"
10	10	GREY/BLACK	14	GENERATOR	30'9"
11	11	YELLOW/RED	14	GENERATOR	30'9"
12	12	YELLOW	14	GENERATOR	15'6"
13	13	BROWN	12	FRESH WATER PUMP	32'9"
14	14	YELLOW	12	GROUND	17'6"
15	15	PINK/GRN	14	STBD FUEL TANK	29'
16	16	YELLOW	14	GROUND	26'3"
17	17	PINK/RED	14	PORT FUEL TANK	23'6"
18	18	YELLOW	14	GROUND	17'9"

WIRE CHART

19	19	BROWN/BLK	12	AFT SHOWER	21'
20	20	YELLOW	12	GROUND	18'3"
21	21	BROWN/ORG	12	AFT BILGE PUMP	26'
22	22	BROWN/YEL	12	AFT BILGE PUMP	26'
23	23	YELLOW	12	GROUND	23'3"
24	24	RED	10	TRIM TABS	30'
25	25	GREEN	10	TRIM TABS	30'
26	26	BLUE	10	TRIM TABS	30'
27	27	YELLOW	10	TRIM TABS	30'
28	28	GREY/BLACK	14	GROUND	27'3"
29	29	RED/ORANGE	14	AFT TOILET	30'
30	30	YELLOW	14	GROUND	27'3"
31	31	YELLOW	12	DC MAIN GROUND	29'3"
32	32	GREEN	12	SAFETY GROUND	29'3"

SILVERTON PART NO. 005 – 6365

SILVERTON Marine Corporation
DESIGN AND ENGINEERING

301 RIVERSIDE DRIVE, MILLVILLE, NEW JERSEY 08332
TEL: 609.825.4117 FAX: 609.293.8025

DRAWN BY: SDG		APPROVED BY: JBP	
SCALE: NO		DATE: 7/02/99	
DATE	DISTRIBUTION	DATE	REVISIONS
7/99	JCH ASSOC.		

352 MOTOR YACHT
BILGE HARNESS
DWG NO.: E35278399D
SHEET NO.: 1 OF 1

WIRE CHART					
1	1	YELLOW	6	GROUND	22'
2	2	ORG/RED	6	BRIDGE ELEC.	22'
3	3	BLK/WHT	14	HALON	22'
4	4	ORG/GREEN	6	HELM ACC	22'
5	5	YELLOW	6	GROUND	22'
6	6	RED/WHT	12	PARALLEL START	22'
7	7	GRAY/YEL	12	TRANSOM LT	22'
8	8	PINK/RED	14	FUEL	22'
9	9	YELLOW	8	BLOWER	22'
10	10	BLUE/ORG	12	COURT LT	22'
11	11	GRAY	12	FLYBRIDGE	22'
12	12	GRAY/WHT	12	FLYBRIDGE	22'
13	13	GRAY/GREEN	12	FLYBRIDGE	22'
14	14	GREEN	10	FLYBRIDGE	22'
15	15	RED	12	TRIM TABS	22'
16	16	GREEN	12	TRIM TABS	22'
17	17	YELLOW	12	TRIM TABS	22'
18	18	BLUE	12	TRIM TABS	22'
19	19	PINK/GRN	14	FUEL	22'

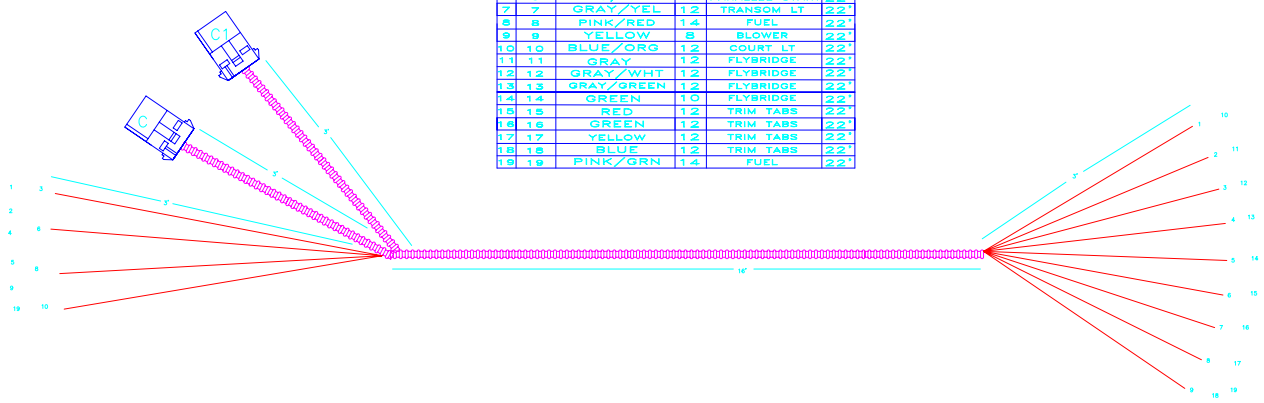

CAP C NO. 770020-1				
1	11	GRAY	12	FLYBRIDGE
2	12	GRAY/WHT	12	FLYBRIDGE
3	13	GRAY/GREEN	12	FLYBRIDGE
4	14	GREEN	10	FLYBRIDGE
5	7	GRAY/YEL	12	TRANSOM LT
6	—	—	—	—

CAP C1 NO. 770020-1				
1	15	RED	12	TRIM TABS
2	16	GREEN	12	TRIM TABS
3	17	YELLOW	12	TRIM TABS
4	18	BLUE	12	TRIM TABS
5	—	—	—	—
6	—	—	—	—

SILVERTON PART # 005 – 6369

SILVERTON Marine Corporation
DESIGN AND ENGINEERING
301 RIVERSIDE DRIVE, MILLVILLE, NEW JERSEY 08332
TEL: 609.825.4117 FAX: 609.293.8025

DRAWN BY: SDG	APPROVED BY: JBP	352 MOTOR YACHT
SCALE: NO	DATE: 7/9/99	CONSOLE JUMPER HARNESS
DATE / DISTRIBUTION	DATE / REVISIONS	DWG NO.: E352756998
		SHEET NO.: 1 OF 1

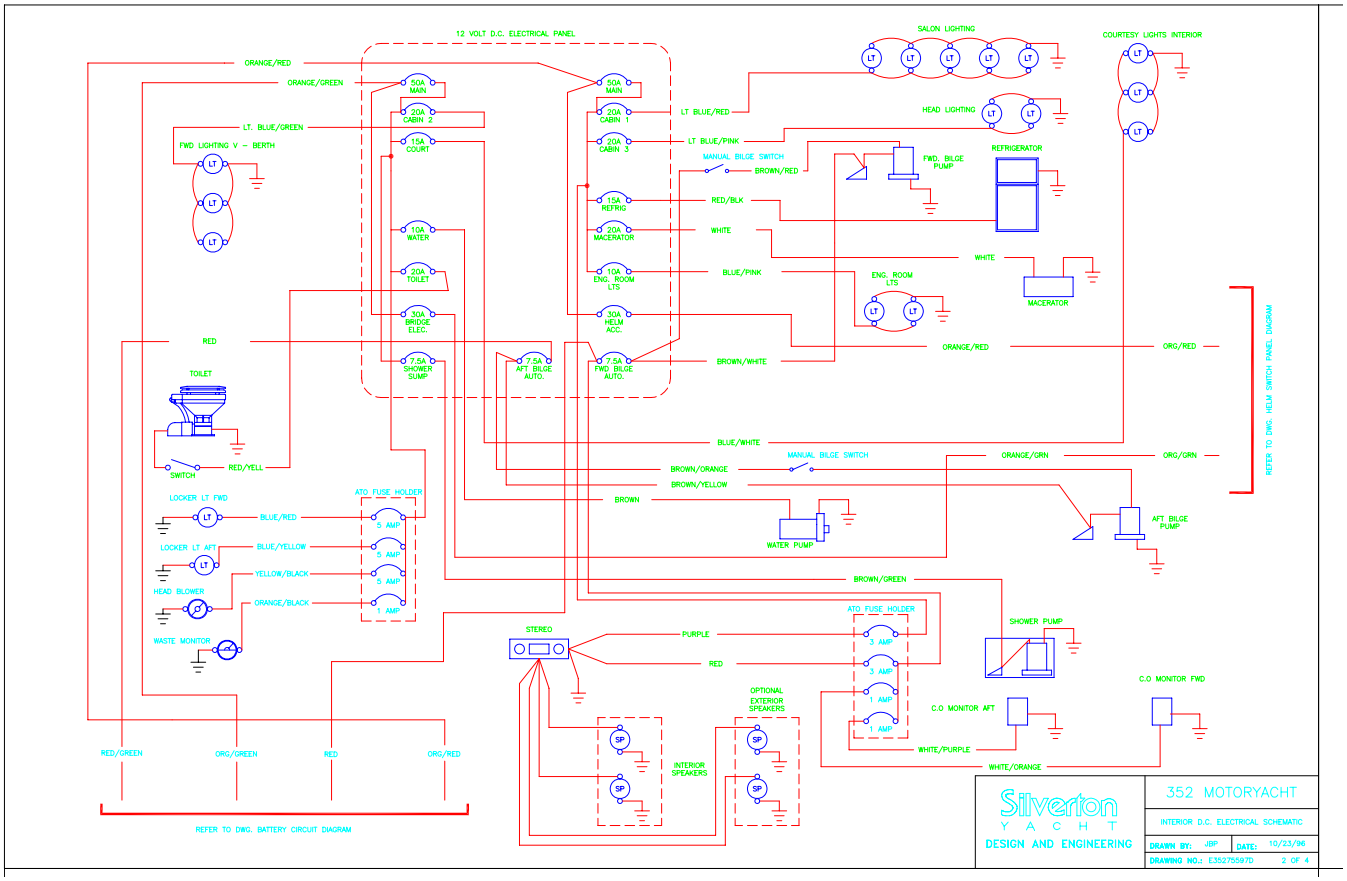

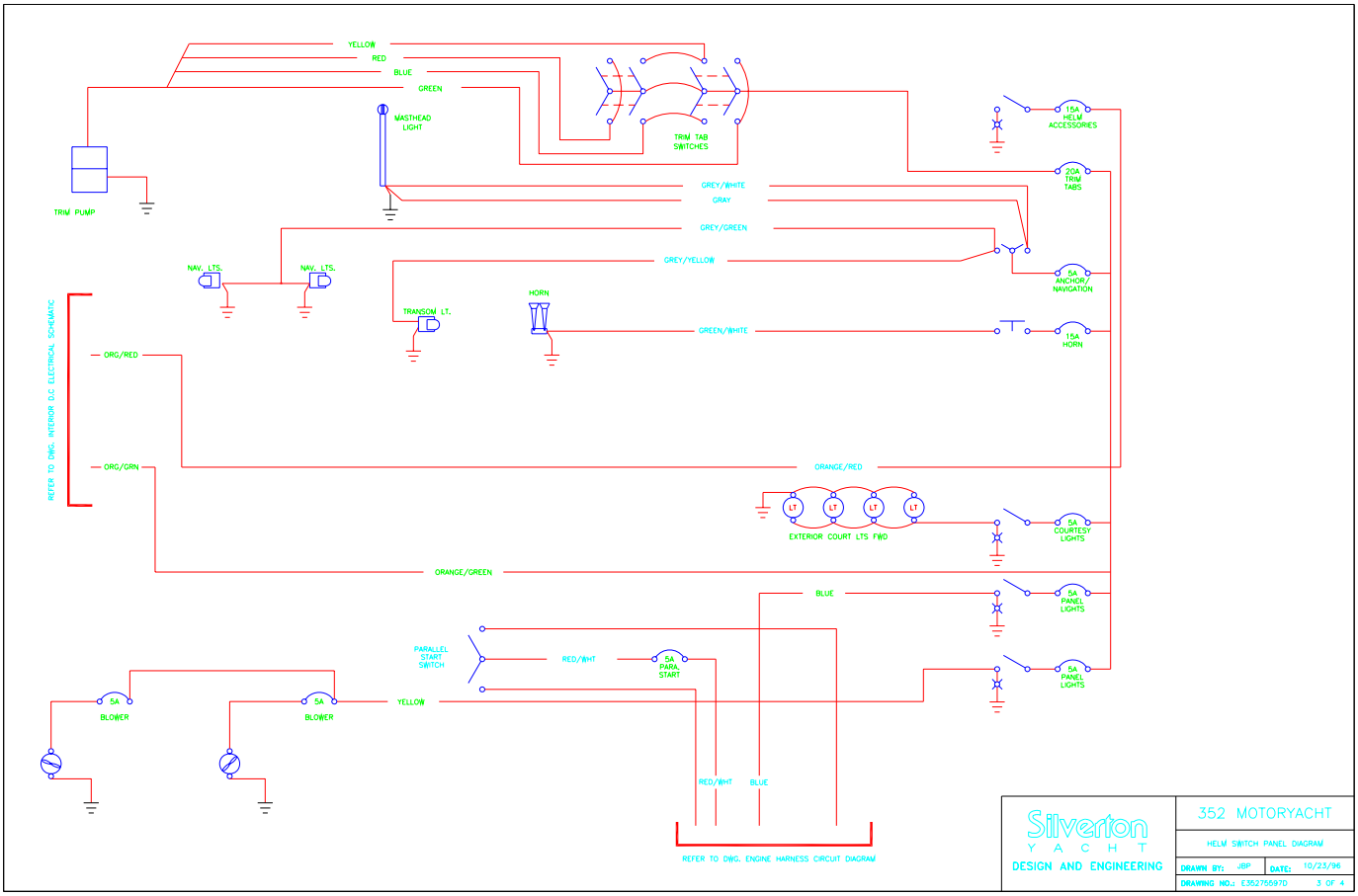

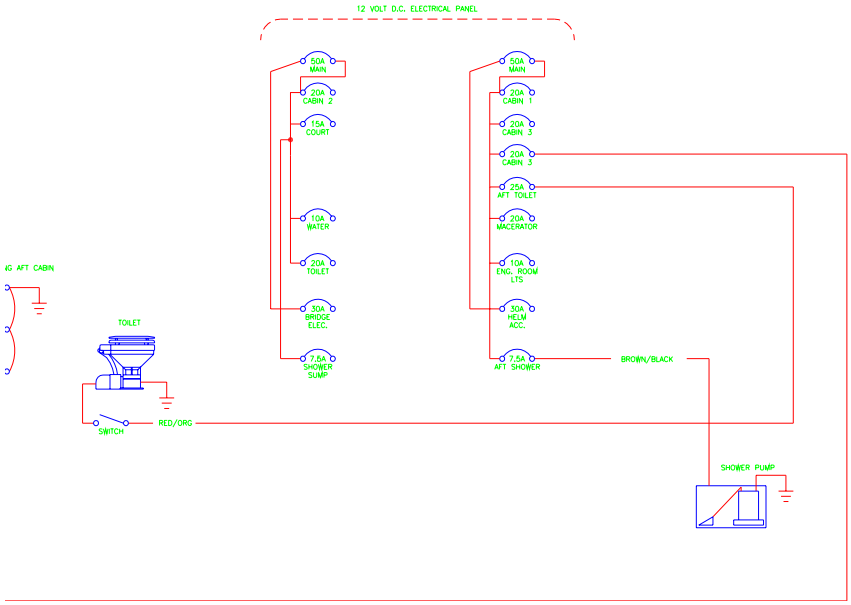

Silverton YACHT
DESIGN AND ENGINEERING

352 MOTORYACHT

INTERIOR D.C. ELECTRICAL SCHEMATIC

DRAWN BY: JBP DATE: 10/23/96

DRAWING NO.: E352755970 2 OF 4

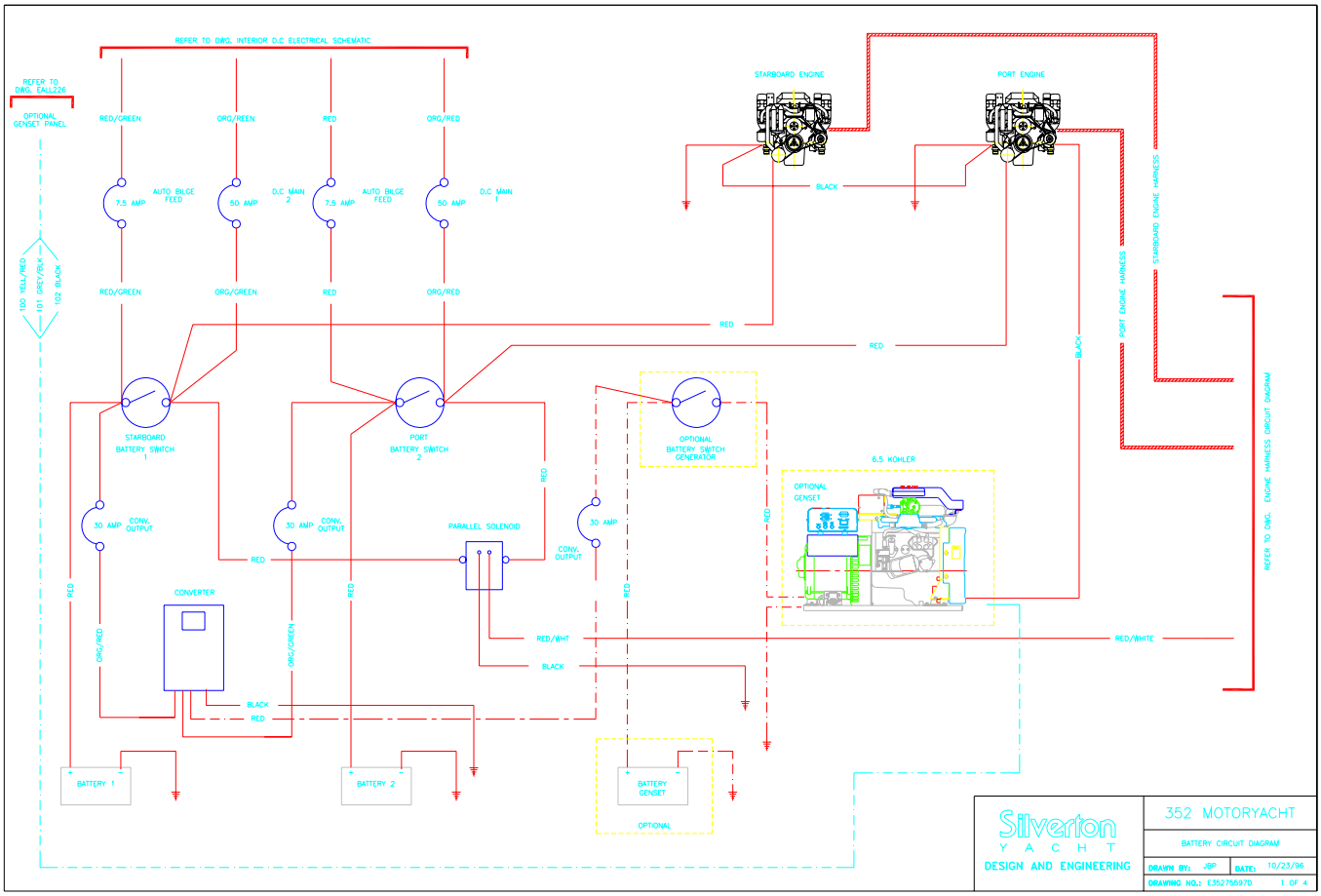

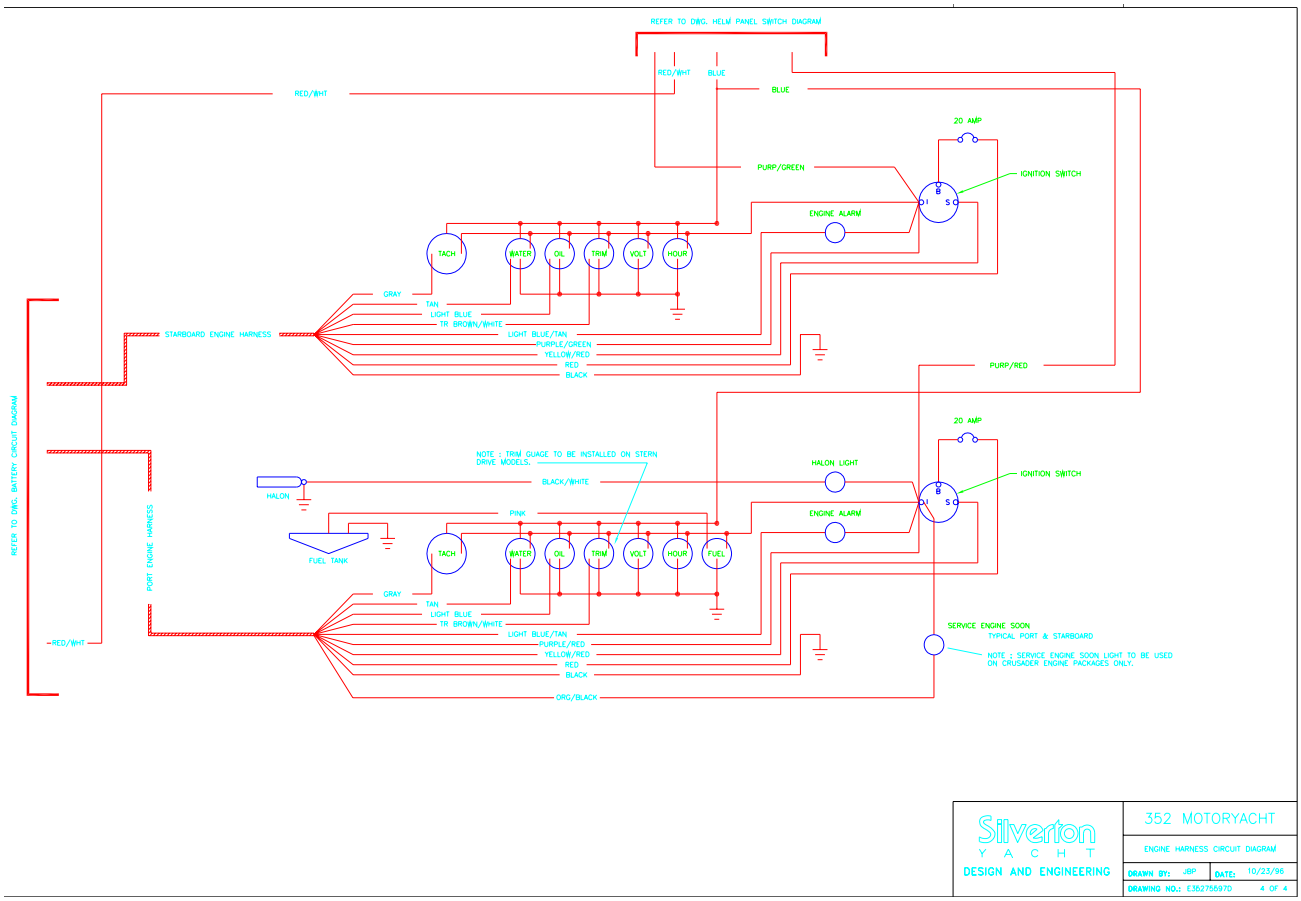

Silverton YACHT
DESIGN AND ENGINEERING

352 MOTORYACHT

ENGINE HARNESS CIRCUIT DIAGRAM

DRAWN BY: JBP DATE: 10/23/96

DRAWING NO.: E352755970 4 OF 4

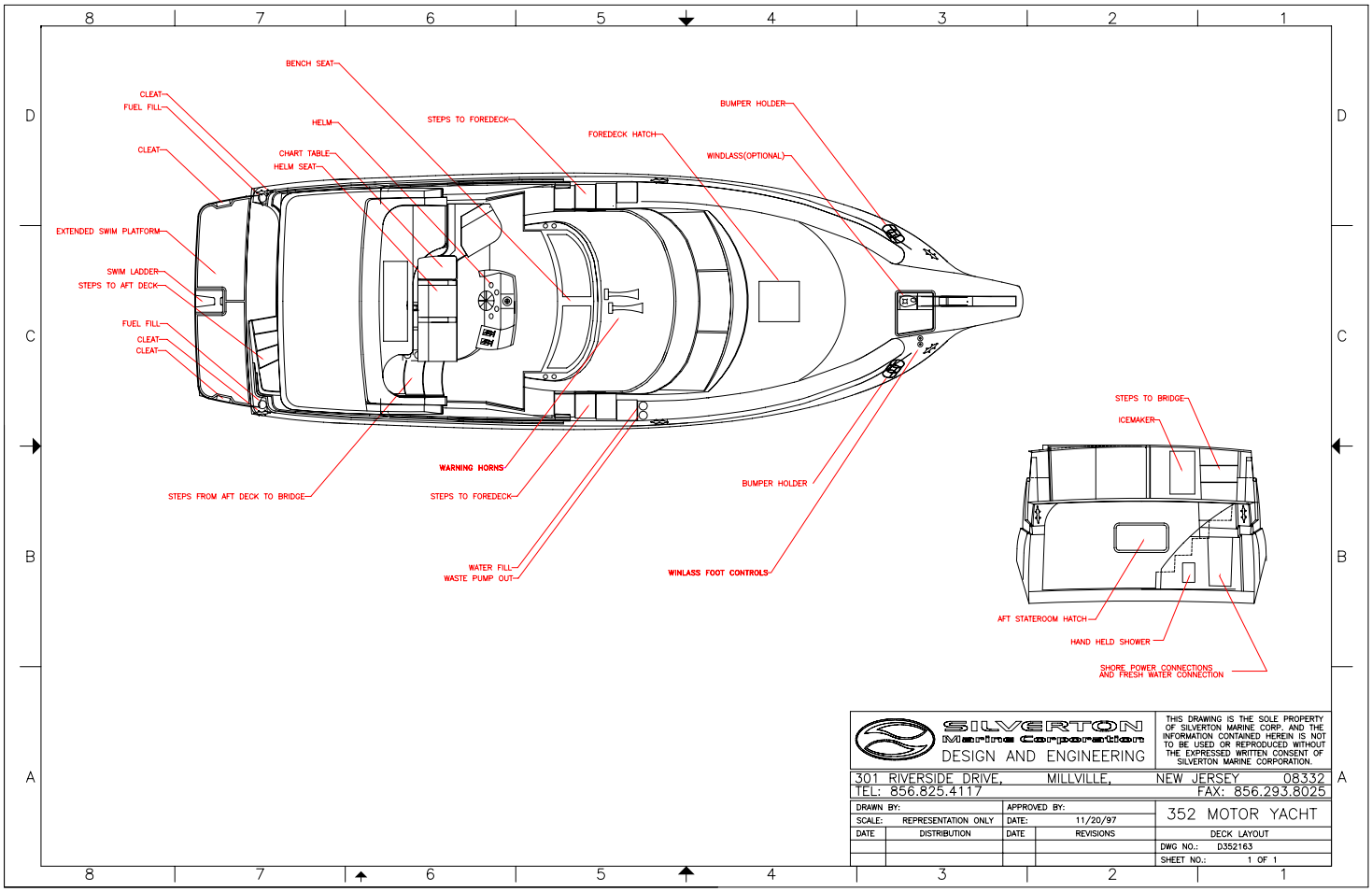

SILVERTON Marine Corporation
DESIGN AND ENGINEERING

THIS DRAWING IS THE SOLE PROPERTY OF SILVERTON MARINE CORP. AND THE INFORMATION CONTAINED HEREIN IS NOT TO BE USED OR REPRODUCED WITHOUT THE EXPRESSED WRITTEN CONSENT OF SILVERTON MARINE CORPORATION.

301 RIVERSIDE DRIVE, MILLVILLE, NEW JERSEY 08332
TEL: 856.825.4117 FAX: 856.293.8025

DRAWN BY:		APPROVED BY:		352 MOTOR YACHT
SCALE:	REPRESENTATION ONLY	DATE:	11/20/97	DECK LAYOUT
DATE	DISTRIBUTION	DATE	REVISIONS	DWG NO.: D352163
				SHEET NO.: 1 OF 1

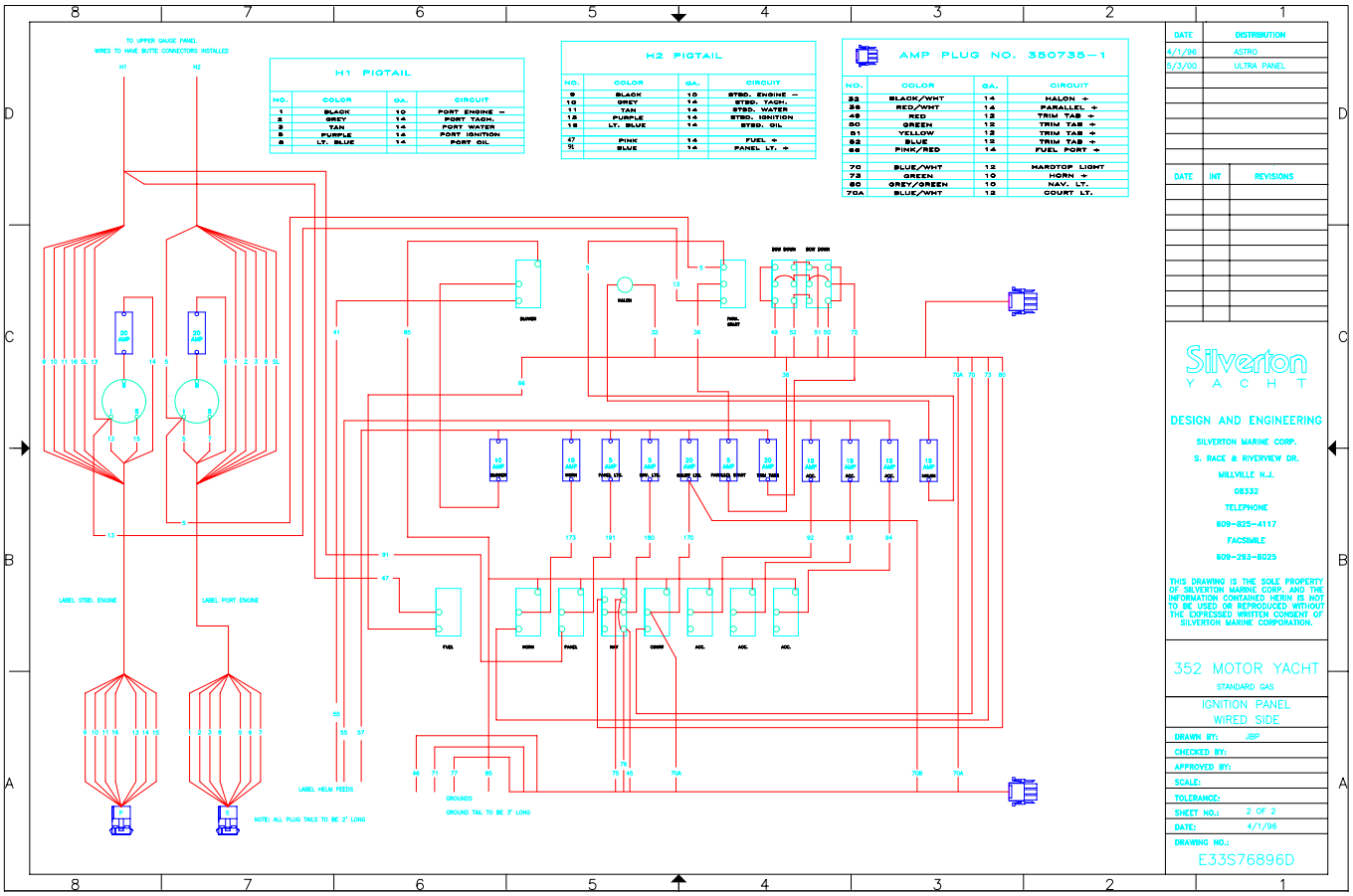

H1 PIGTAIL

NO.	COLOR	GA.	CIRCUIT
1	BLACK	10	PORT ENGINE –
2	GREY	14	PORT TACH.
3	TAN	14	PORT WATER
5	PURPLE	14	PORT IGNITION
8	LT. BLUE	14	PORT OIL

H2 PIGTAIL

NO.	COLOR	GA.	CIRCUIT
9	BLACK	10	STBD. ENGINE –
10	GREY	14	STBD. TACH.
11	TAN	14	STBD. WATER
12	PURPLE	14	STBD. IGNITION
16	LT. BLUE	14	STBD. OIL
47	PINK	14	FUEL +
36	BLUE	14	PANEL LT. +

AMP PLUG NO. 350735-1

NO.	COLOR	GA.	CIRCUIT
32	BLACK/WHT	14	HALON +
38	RED/WHT	14	PARALLEL +
49	RED	12	TRIM TAB +
50	GREEN	12	TRIM TAB +
51	YELLOW	12	TRIM TAB +
52	BLUE	12	TRIM TAB +
68	PINK/RED	14	FUEL PORT +
70	BLUE/WHT	12	HARDTOP LIGHT
73	GREEN	10	HORN +
80	GREY/GREEN	10	NAV. LT.
70A	BLUE/WHT	12	COURT LT.

DATE	DISTRIBUTION
4/1/96	ASTRO
5/3/00	ULTRA PANEL

DATE	INT	REVISIONS

P AMP CAP NO. 350782-1

NO.	COLOR	GA.	CIRCUIT
1	BLACK	10	GROUND
2	GREY	14	TACH
3	TAN	14	WATER TEMP
4	LT.BLUE/TAN	14	ALARM
5	PURPLE	14	IGNITION
6	RED/PURP.	10	BATTERY +
7	YELLOW/RED	12	STARTER
8	LT. BLUE	14	OIL PRESS.

S AMP CAP NO. 350782-1

NO.	COLOR	GA.	CIRCUIT
9	BLACK	10	GROUND
10	GREY	14	TACH
11	TAN	14	WATER TEMP
12	LT.BLUE/TAN	14	ALARM
13	PURPLE	14	IGNITION
14	RED/PURP.	10	BATTERY +
15	YELLOW/RED	12	STARTER
16	LT. BLUE	14	OIL PRESS.

H3 AMP PLUG NO. 350720-1

NO.	COLOR	GA.	CIRCUIT
48	GREY/YELLOW	14	TRANSOM LT.
49	BLACK	14	TRANSOM LT. -
70B	BLUE/WHT	12	HARDTOP +
70A	BLUE/WHT	12	COURT. LT. FEED
71	BLACK	14	HARDTOP -
76	GREY	14	MASTHEAD +
76	GREY/WHT	14	ANCHOR +
77	BLACK	14	MASTHEAD -
70A	BLUE/WHT	12	COURT LT. +

NOTE: BLACK CONTURA LIGHTED SWITCHES

NOTE: PANEL EDGES ARE TO BE NOSED

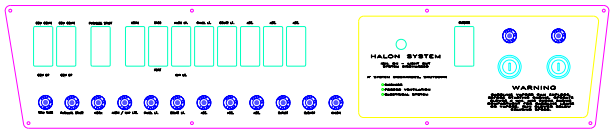

NOTE: BREAKERS TO HAVE SCREW TERMINALS

SWITCH CUT-OUT DETAIL

IGNITION SWITCH DETAIL

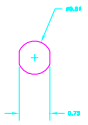

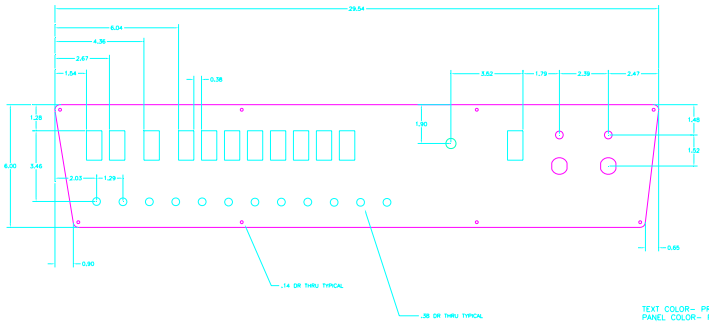

TEXT COLOR- PROCESS WHITE
PANEL COLOR- PANTONE 532

NOTE: USE TEMPLATE SUPPLIED FOR PANEL OUTLINE

DATE	DISTRIBUTION
4/1/96	JCH ASSOC.

DATE	INT	REVISIONS
9-24-01	GH	LABEL FUEL SWITCH PORT & STBD

Silverton YACHT

DESIGN AND ENGINEERING

SILVERTON MARINE CORP.
S. RACE & RIVERVIEW DR.
MILLVILLE N.J.
08332
TELEPHONE
609-825-4117
FACSIMILE
609-293-8025

352 MOTOR YACHT
STANDARD GAS

HELM SWITCH PANEL

DRAWN BY: JBP
CHECKED BY:
APPROVED BY:
SCALE: 1 = 2
TOLERANCE:
SHEET NO.: 1 OF 2
DATE: 4/1/96
DRAWING NO.:
E33S76896D

HELM STATION LAYOUT

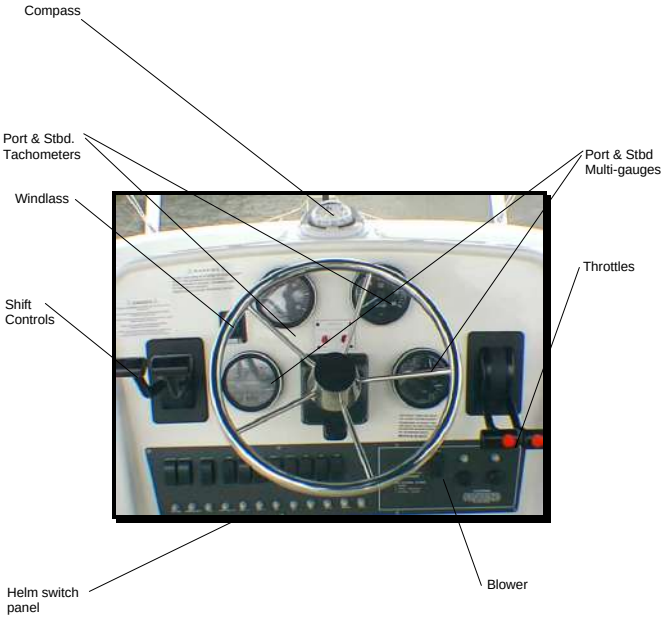

HELM SWITCH PANEL

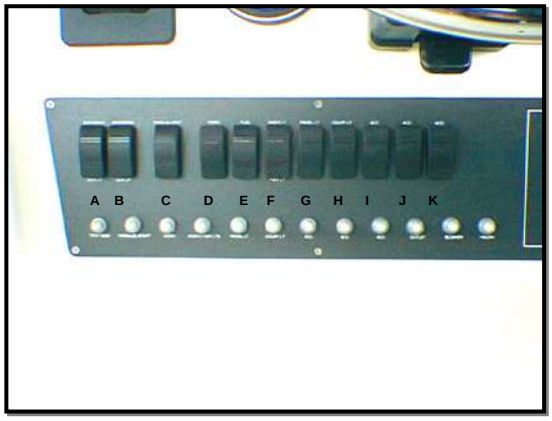

A	Trim Tab
B	Trim Tab
C	Parallel Start
D	Horn
E	Fuel
F	Anchor / Navigation Light
G	Panel Lights
H	Courtesy Lights
I	Accessory
J	Accessory
K	Accessory

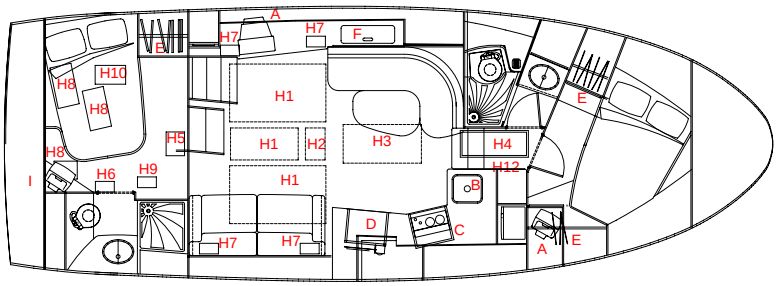

H1 ENGINE COMPARTMENT
H2 BATTERY SWITCHES
H3 GENERATOR COMPARTMENT
H4 COMPANIONWAY HATCH
H5 SHOWER PUMP
H6 STRUT ACCESS
H7 FUEL TANK FITTINGS
H8 STEERING GEAR
H9 SHOWER DRAIN
H10 AFT AC UNIT
H11 STEERING GEAR & TRIM TAB PUMP
H12 FWD AC UNIT

A TELEVISION CONNECTION
B GALLEY SINK
C RANGE
D REFRIGERATOR
E HANGING LOCKER
F STORAGE

SILVERTON Marine Corporation
DESIGN AND ENGINEERING

301 RIVERSIDE DRIVE, MILLVILLE, NEW JERSEY 08332
TEL: 856.825.4117 FAX: 856.293.8025

DRAWN BY:		APPROVED BY:	
SCALE: REPRESENTATION ONLY		DATE: 11/21/97	
DATE	DISTRIBUTION	DATE	REVISIONS

352 MOTOR YACHT
INTERIOR LAYOUT
DWG NO.: I352055
SHEET NO.: 1 OF 1

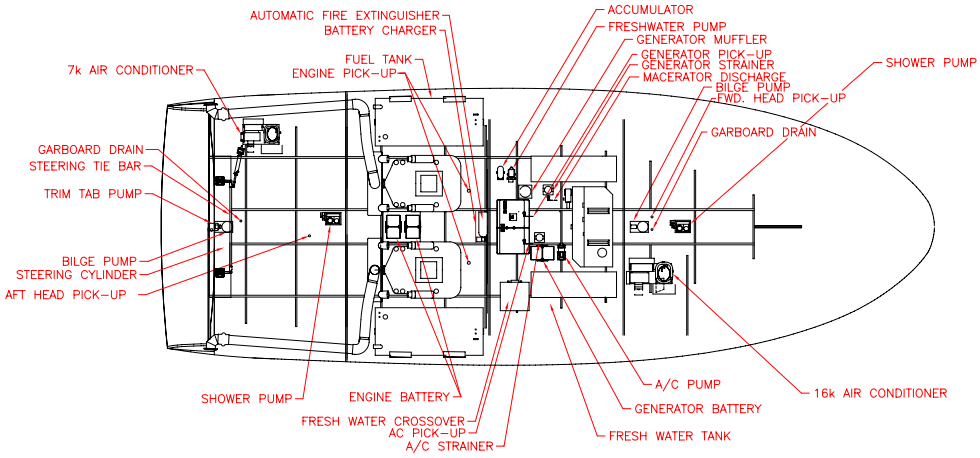

SILVERTON Marine Corporation
DESIGN AND ENGINEERING

301 RIVERSIDE DRIVE, MILLVILLE, NEW JERSEY 08332
TEL: 609.825.4117 FAX: 609.293.8025

DRAWN BY:		APPROVED BY:	352 MOTOR YACHT
SCALE: REPRESENTATION ONLY		DATE: 11/20/97	MECHANICAL LAYOUT
DATE	DISTRIBUTION	DATE / REVISIONS	DWG NO.: M352618
			SHEET NO.: 1 OF 1

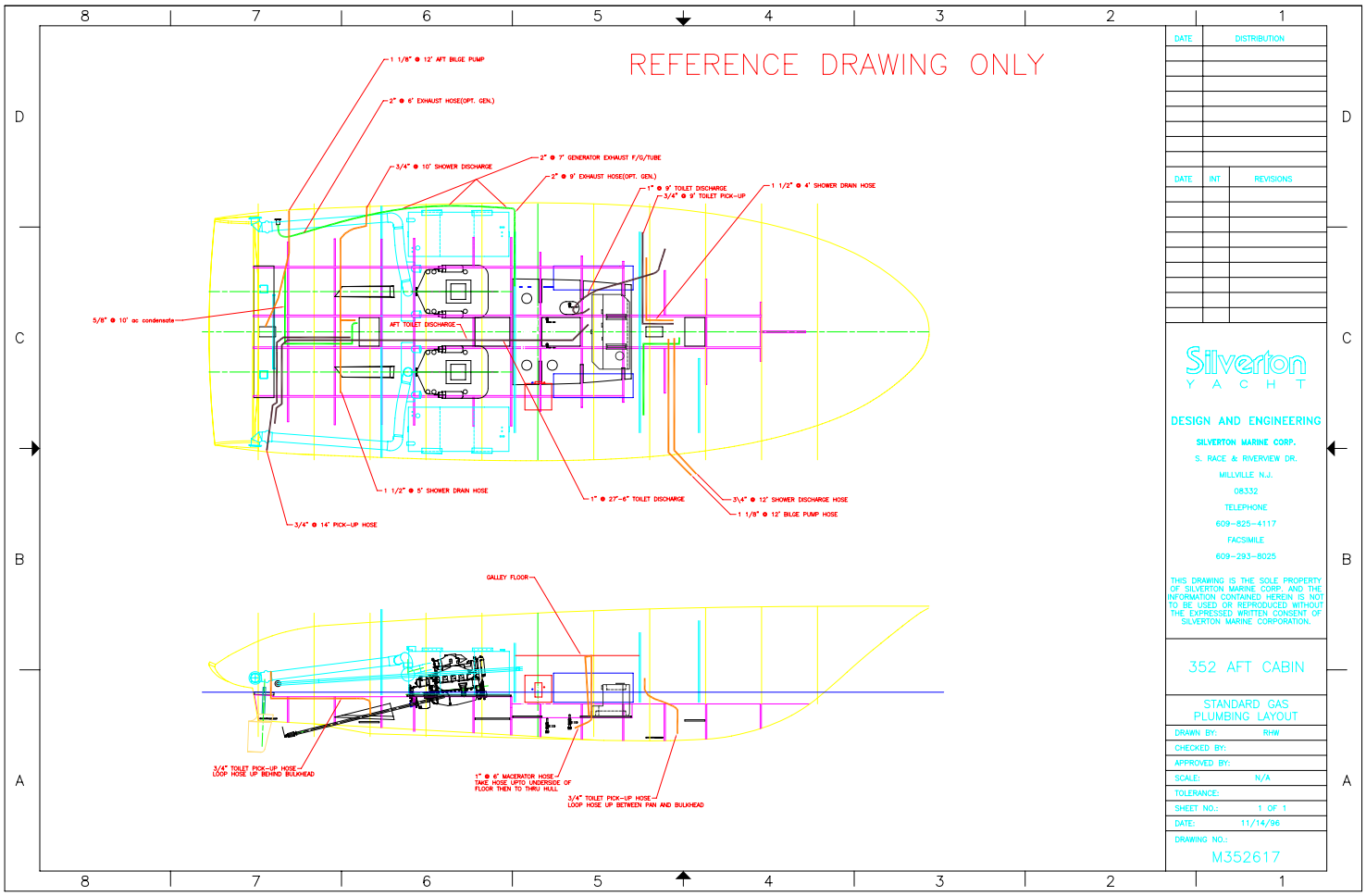

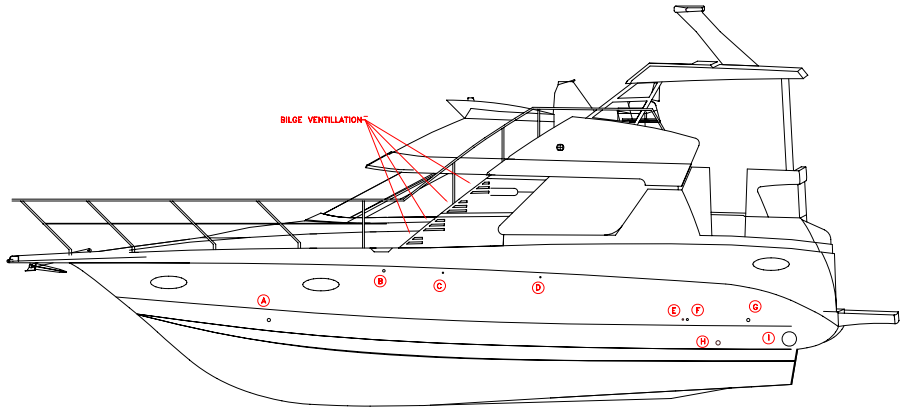

A	FWD HEAD SINK DRAIN
B	WASTE TANK VENT
C	FRESH WATER TANK VENT
D	FUEL VENT
E	A/C DISCHARGE(OPTIONAL)
F	AFT SHOWER SUMP
G	BILGE PUMP
H	GENERATOR EXHAUST(OPTIONAL)
I	ENGINE EXHAUST

SILVERTON Marine Corporation
DESIGN AND ENGINEERING
301 RIVERSIDE DRIVE, MILLVILLE, NEW JERSEY 08332
TEL: 856.825.4117 FAX: 855.293.8025

DRAWN BY:		APPROVED BY:	
SCALE:	REPRESENTATION ONLY	DATE:	11/20/97
DATE	DISTRIBUTION	DATE	REVISIONS

352 MOTOR YACHT

PORT PROFILE

DWG NO.: H352A321

SHEET NO.: 1 OF 1

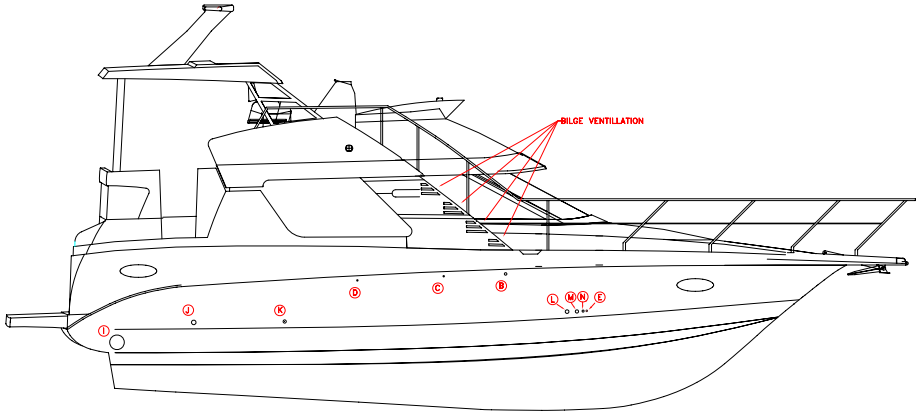

B	WASTE TANK VENT
C	FRESH WATER TANK VENT
D	FUEL VENT
E	A/C DISCHARGE(OPTIONAL)
I	ENGINE EXHAUST
J	AFT HEAD SINK DRAIN
K	WET BAR DRAIN
L	GALLEY SINK DRAIN
M	FWD BILGE
N	FWD SHOWER SUMP

SILVERTON Marine Corporation
DESIGN AND ENGINEERING

301 RIVERSIDE DRIVE, MILLVILLE, NEW JERSEY 08332
TEL: 856.825.4117 FAX: 856.293.8025

DRAWN BY:		APPROVED BY:	
SCALE: REPRESENTATION ONLY		DATE: 11/20/97	
DATE	DISTRIBUTION	DATE	REVISIONS

352 MOTOR YACHT
STBD PROFILE
DWG NO.: H352A321
SHEET NO.: 1 OF 1