HUNTER OWNER'S MANUAL
TABLE OF CONTENTS

INTRODUCTION	*PAGE*
• Warranty Registration Form……	1
• Hunter Warranty……	2-3
• Brief History……..	4
• Glossary of Sailing Terms…..……	5-8
• Explanation of Symbols and Labels……	9

GENERAL HANDLING AND OPERATION	
• Safe Boating Tips……..	10-11
• Pre-Departure Checklist……	12
• Float Plan……	13
• After Sailing Check List……	14
• Docking and Anchoring…….	15
• Diesel Engine and Motoring…….	16-17
• Electrical System……	17-18
• Cook Stove……..	19
• Toilet……	19
• Opening Hull Ports…….	19
• Pumps……..	20
• Water System Operation…….	20
• Waste Discharge……..	21
• Environmental Considerations…….	22

MAINTENANCE	
• Instructions for Preparation for Bottom Painting……...	23
• Engine, Transmission, and Drive train……	24-25
• Compasses…….	26
• Steering Systems……..	26
• Electrical Systems……	26
• Plumbing Systems…….	27
• Fuel Systems……..	27
• General Care……..	28-29
• Fabric Care……	29
• Electrolysis and Galvanic Protection……..	30
• Teak Care……	30
• Storage/Winterization……...	31-33
• Certification Details……	34
• Lightning Warning……..	35

HUNTER OWNER'S MANUAL
TABLE OF CONTENTS (CONT'D)

DESCRIPTION OF MODEL	*PAGE*
• Profile with Rig and Sail Dimensions……..	36
• Dimensions, Capacities, etc…….	37
• Deck Plan and Hardware……..	38
• Deck Hardware Parts Listing……	39
• Accommodation Plan…….	40A-40C
• Dinette Table Operation……	41A
• Lifting Points……	41B
• Running Rigging Layout……	42A-1&2
• Mainsheet Rigging…….	43
• Arch Installation……..	44
• Boom and Reefing Details……	45
• Running Rigging Specifications……..	46
• Rig Description……..	47
• Standing Rigging Layout……..……	48
• Spreader Details…….	49
• Standing Rigging Specifications……..	50
• Standing Rigging Attachments…….	51
• Rig Tuning Instructions…….	52-53
• Spinnaker Details……...	54
• Engine Compartment Details……...	55
• Shaft and Propeller……	56

SYSTEMS AND CIRCUITS	*PAGE*
• Potable Water System……..	57
• Waste System…….	58
• Bilge Pumping System……..	59
• Through Hulls, Seacocks, and Valves……	60
• Fuel System……	61
• Propane System…….	62
• **Electrical System (See Electrical System Table Of Contents)……**	63A-1
• Steering System…….	66-68
• Anchoring Arrangement……	69
• Index…….	70

HUNTER OWNER'S MANUAL
TABLE OF CONTENTS (CONT'D)

EQUIPMENT MANUALS AND INFORMATION

- Engine Manual
- Knotmeter and Depthsouder
- VHF Radio (except where not provided)
- Compass Information
- Stereo Manual
- Furling System Manual
- Marine Rigging Guide
- Winch Maintenance Guide
- Steering Maintenance Guide
- Sail Maker Information
- Water Strainer
- Bilge Pump
- Toilet Manual
- Stove Manual
- Hot Water Manual
- Microwave Manual (except where not provided)
- Other:

Welcome to

THE HUNTER MARINE FAMILY

Congratulations on your new sailing yacht manufactured by Hunter Marine. We have engineered and constructed your boat to be as fine a yacht as any afloat. In order to get the best performance and most enjoyment from your boat you should be familiar with its various elements and their functions. For your sailing pleasure and safety, please take time to study this manual.

We stand behind the quality of your boat with a warranty, which you should review. To insure the validity of your warranty, please complete the attached card and send it to us within ten (10) days of the purchase date. Section 15 of the U.S. Federal Boat Safety Act requires registration of a boat's first owner. The warranty data should also be recorded in the space below for your own reference.

This manual has been compiled to help you operate your craft with safety and pleasure. It contains details of the craft; equipment supplied or fitted, systems, and information on operation and maintenance. Please read it carefully, and familiarize yourself with the craft before using it. If this is your first sailboat or you are changing to a type of craft you are not familiar with, please ensure that you obtain proper handling and operating experience before you assume command of the craft. Your dealer or national sailing federation or yacht club will be pleased to advise you of local sea schools or competent instructors.

PLEASE KEEP THIS MANUAL IN A SAFE PLACE AND HAND IT OVER TO THE NEW OWNER IF YOU SELL THE CRAFT.

You should also complete the warranty cards for your engine, stove, head, electric water pump and other accessories. These are enclosed in the manufacturers' manuals that are packaged with your owner's manual.

OWNER INFORMATION CARD

HULL IDENTIFICATION NUMBER IS ON THE STARBOARD AFT SIDE OF THE HULL OR TRANSOM.
THIS NUMBER MUST BE GIVEN IN ALL NECESSARY CORRESPONDENCE.

HULL NO. *DATE DELIVERED TO OWNER*

YACHT NAME

OWNER NAME

STREET ADDRESS

CITY *STATE/COUNTRY* *ZIP CODE*

HOME PORT

ENGINE MODEL *SERIAL NO.* *PROPELLER SIZE*

DEALER *PHONE*

STREET ADDRESS

CITY *STATE/COUNTRY* *ZIP CODE*

CUSTOMER SERVICE / WARRANTY

The following warranties apply to all 2004 Model Year boats produced by HUNTER MARINE CORPORATION:

LIMITED ONE-YEAR WARRANTY

Hunter Marine warrants to the first-use purchaser and any subsequent owner during the warranty period that any part manufactured by Hunter will be free of defects caused by faulty workmanship or materials for a period of twelve (12) months from the date of delivery to the first-use purchaser under normal use and service. During this period, Hunter will repair or replace any part judged to be defective by Hunter, after it is reviewed by the selling dealership.

LIMITED FIVE-YEAR HULL STRUCTURE AND BOTTOM BLISTER WARRANTY

Hunter warrants to the first-use purchaser and any subsequent owner during the warranty period that the hull of each boat will be free from structural defects in materials and workmanship for a period of five (5) years from the date of delivery to the first-use purchaser under normal use and service.

This limited warranty applies only to the structural integrity of the hull and the supporting pan/grid or stringer system. Hulls, pan/grid or stringers modified in any way or powered with engines other than the type and size installed or specified by Hunter are not covered by this limited warranty. The obligation of Hunter under this limited warranty is limited to the repair or replacement of hulls that it determines to be structurally defective. This is your sole and exclusive remedy.

Hunter also warrants to the first-use purchaser and any subsequent owner during the warranty period that the boat will be free from gel-coat blistering on underwater surfaces of the hull, excluding the keel and rudder, for a period of five (5) years from the date of delivery to the first-use purchaser under normal use and service. During this period, Hunter will supply or reimburse an authorized Hunter dealer for all of the parts and labor required to repair a blistered underwater surface of the hull. The labor cost reimbursement will be based on the Labor Allowance Schedule established by Hunter from time to time, however if the repair is performed by a non-Hunter dealer, the repair cost must be authorized by Hunter in advance and be based on a reasonable number of hours as determined by Hunter. Hunter will not pay transportation, hauling, launching, bottom paint, storage, dockage, cradling rental, rigging and derigging, or other similar costs. It is recommended that the repair be done during a seasonal haul out for service or storage.

The following circumstances will void the bottom blister limited warranty:

(1) If the gel-coat has been sanded, sandblasted, or subjected to abrasion or impact.

(2) If the instructions provided in the Hunter Owner's Manual are not followed according to Hunter's required bottom preparation procedures.

RESTRICTIONS APPLICABLE TO WARRANTIES

These limited warranties **do not cover**:

(1.) Paint, window glass, Gelcoat, upholstery damage, plastic finishes, engines, engine parts, bilge pumps, stoves, blowers, pressure water pumps, propellers, shafts, rudders, controls, instruments, keels and equipment not manufactured by HUNTER. Any warranty made by the manufacturer of such items will be, if possible, given on to the first use purchaser.

(2.) Problems caused by improper maintenance, storage, cradling, blocking, normal wear and tear, misuse, neglect, accident, corrosion, electrolysis or improper operation.

(3) Boats used for commercial activities including charter.

THESE LIMITED WARRANTIES ARE YOUR SOLE AND EXCLUSIVE REMEDIES AND ARE ESPRESSLY IN LIEU OF ANY AND ALL OTHER REMEDIES AND WARRANTIES EXPRESSED AND IMPLIED, INCLUDING THE WARRANTIES OF MERCHANTABILITY AND FITNESS FOR A PARTICULAR PURPOSE, WHETHER ARISING BY LAW, CUSTOM, CONDUCT, OR USAGE OF TRADE. SOME STATES DO NOT ALLOW LIMITATIONS ON HOW LONG AN IMPLIED WARRANTY LASTS, SO THE ABOVE LIMITATION MAY NOT APPLY TO YOU. IN THE EVENT THAT IMPLIED WARRANTIES ARE FOUND TO EXIST UNDER THE LAW OF A PARTICULAR STATE, NOTWITHSTANDING THE EXCLUSION CONTAINED HERIN, THE DURATION OF ANY SUCH IMPLIED WARRANTY SHALL BE LIMITED TO THE DURATION OF THE APPLICABLE LIMITED WARRANTY STATED HEREIN. THE PURCHASER ACKNOWLEDGES THAT NO OTHER REPRESENTATIONS WERE MADE TO HIM OR HER WITH RESPECT TO THE QUALITY OR FUNCTION OF THE BOAT. ANY ORAL STATEMENT OR PRINTED MATERIAL ADVERTISING THE BOAT WHICH SPEAKS TO ANY PERFORMANCE CHARACTERISTIC OF THE BOAT OR ANY OF ITS COMPONENTS SHALL BE CONSIDERED AND CONSTRUED AS AN ESTIMATED DESCRIPTION ONLY AND SHOULD NOT BE RELIED UPON AS AN EXPRESS WARRANTY OR AS THE BASIS OF THE BARGAIN FOR THE BOAT OR ANY OF ITS COMPONENTS.

ANY CONSEQUENTIAL, INDIRECT OR INCIDENTAL DAMAGES WHICH MAY BE INCURRED ARE EXCCLUDED AND PURCHASER'S REMEDY IS LIMITED TO REPAIRS OR REPLACEMENT OF ANY PART(S) JUDGED DEFECTIVE BY HUNTER MARINE. SOME STATES DO NOT ALLOW THE EXCLUSION OR LIMITATION OF INCIDENTAL OR CONSEQUENTIAL OR INDIRECT DAMAGES, SO THE ABOVE LIMITATION OR EXCLUSION MAY NOT APPLY TO YOU. THIS WARRANTY GIVES YOU SPECIFIC LEGAL RIGHTS, AND YOU MAY ALSO HAVE OTHER RIGHTS WHICH VARY FROM STATE TO STATE.

WARRANTY REGISTRATION

These limited warranties shall not be effective unless the HUNTER Warranty Registration Form and Pre-Delivery Service Record, which are furnished with each new boat, are filled out completely and returned to HUNTER within ten (10) days of delivery.

Return of the Warranty Registration Form to HUNTER, signed by both Dealer and Owner, is critical. Warranty coverage cannot be initiated until the completed form is received at HUNTER.

All repairs and/or replacements will be made by an authorized Hunter dealer, or at the option of Hunter, at the Hunter plant. If the repairs are of such a nature that the warranty work must be performed at the HUNTER plant, transportation costs to and from the HUNTER plant shall be paid by the owner. The labor cost reimbursement will be based on a Labor Allowance Schedule established by HUNTER and where not applicable, on a reasonable number of hours as determined by HUNTER. Any repairs and replacements must be approved in advance by an authorized HUNTER service representative.

TRANSFER OF LIMITED WARRANTIES

For 1995 and later hull numbers, the limited warranties will be transferred to a subsequent purchaser of the boat if:

(1) A notice of the transfer of ownership of the boat is given by the subsequent purchaser in writing to Hunter within thirty (30) days of the transfer.

(2) The notice shall include the name, address and telephone number of the subsequent purchaser, the date of purchase, the hull number and the name of the seller of the boat.

Hunter will mail to the subsequent purchaser notice of the expiration dates of the limited warranties. (see form letter, attached) The transfer of the ownership of the boat will not extend the expiration dates of the limited warranties.

CUSTOMER SATISFACTION SURVEYS

During the first year of ownership, the first purchaser will receive two Customer Satisfaction Surveys - the first (CSS#1) will be received shortly after taking delivery and focuses on the dealer's ability to sell and commission the boat, and the Owner's initial satisfaction. The second survey (CSS#2), nine to ten months into ownership, "measures" dealer service capability and allows the owner to evaluate most of the boat's functional systems and characteristics. Both surveys are dependent upon receipt of the first purchaser's Warranty Registration Form.

SAMPLE FORM LETTER

March 12, 1997

Mr. John Smith
1456 Joy Street
Sarasota, FL 34266

Dear Mr. Smith,

Thank you for providing written notice of transfer of ownership. We are pleased you have selected a Hunter sailboat and we will make every effort to assure Hunter ownership will be a satisfying experience for you.

Based on the information you have provided, we are pleased to notify you of the expiration dates of the limited warranties.

- The limited **one-year** New Boat warranty expires (d)_____.
- The limited **five-year** Hull Structure and Bottom Blister warranty expires (d)___ _____.

Should you require assistance at any time during ownership, we encourage you to contact your Hunter dealer or to call us directly at 386-462-3077.

Please confirm the information at the bottom of the page and advise us if any corrections are required.

_____
Customer Service Manager

Hull No: HUN_____ Model:_____

Telephone: (H)_____(B)_____

Date of Purchase:_____

Purchased From: Name:_____

Address:_____

City/State_____Zip_____

( ) Private Owner ( ) Dealer

Warranty Procedure

Following is a detailed outline of the Hunter Warranty Policy. Please read it carefully. The major points are:

- Always refer to the hull number
- Phone or fax us for authorization on warranty work over a $200 USD estimate.
- Send in the warranty claim within thirty (30) days of the repair.

1) All customer warranty problems must be handled through the selling dealer.
   a) Boats must be returned to the selling dealer.
   b) Dealer will contact Hunter Marine and give a brief description of the problem and an estimate of time and cost to correct problem (include complete hull #).
   c) All warranty involving associated equipment--engines, bilge pumps, stoves, pressure water pumps, instrument panels, etc.-- will be handled direct with the manufacturer of said equipment on an exchange basis.

2) For any problem that the dealer cannot correct, the dealer will contact Hunter Marine who will take corrective measures immediately. The repairs may be of such a nature that the customer will have to return the boat to manufacturer at his cost.

3) Hunter Marine will not pay for warranty items that should have been covered in a Pre-Delivery Service check. (See Pre-Delivery Service Check Record.)

4) Hunter Marine will not be responsible for inconveniences, or for losses incurred as a result of defect. Hunter Marine will take measures to correct only the defect.

5) Hunter Marine will apply a base labor rate of $38.00 per hour for warranty repairs, providing all documentation on sold boats has been submitted to Hunter Marine. If you or your employee(s) have attended the recent Hunter Service Training Program and received a Certificate of Training and all documentation has been submitted, the labor rate will be $54.00 per hour on boats your dealership has sold ($60.00 per hour if a boat your dealership DID NOT sell). Hunter Marine will allow $5.00 per foot to haul-out, if necessary and approved.

6) Hunter will not assume any responsibility or liability for parts replaced or any work done by others, without written authorization from Hunter.

7) Photographs are required on all fiberglass warranty work.

8) Warranty work under $200.00 can be done without prior authorization. Any work estimates at more than $200.00 must have prior approval and receive an authorization number for our records.

9) Warranty claims must be sent in duplicate and must contain the **complete** hull number and a brief description of work performed. Labor, parts, materials, and haul-outs must be listed separately. Claims for warranty must be sent to Hunter Marine not more than thirty (30) days after completion of work, or they may not be honored.

HUNTER MARINE'S OWNER AND FOUNDER

WARREN R. LUHRS

BRIEF BACKGROUND

Warren Luhrs was born in East Orange, New Jersey in 1944 into a family with an established tradition in the maritime and transportation industries. His great-grandfather, Henry, was a railroad and clipper-shipping pioneer in America, while his great-uncle John helped build the famous St. Petersburg to Moscow railroad for Czar Alexander II.

Henry Luhrs owned shares in twenty-two different ocean-going vessels – barks, brigs, and schooners - and was the principal owner of the bark *Sophia R. Luhrs*, named for his wife. He was also a partner with Albert Sprout, who managed the shipyard where the *Sophia R. Luhrs* was built in Melbridge, Maine.

Warren Luhrs' father Henry worked at a small boat manufacturer in Morgan, New Jersey, and later started his own company, continuing the Luhrs' family sea tradition during the great depression. During World War II he repaired boats and installed ice sheathing on their bows for the Coast Guard.

After the War, Henry built 27-foot fishing boats and in 1948 began to construct custom-built pleasure craft. He then turned to skiffs and in 1952 incorporated as Henry Luhrs Sea Skiffs, where he constructed lapstrake sea skiffs using assembly-line techniques. Henry personally "shook down" his prototypes on family trips up the Hudson River to Lake Champlain.

The sea skiff is a class of boat that has been very popular, owing to its seaworthiness. It features a sharp bow, which reduces pounding in surf or choppy seas, and a hull whose forward section is rounded below the waterline to increase stability in rough water or a following sea. Such skiffs can either be smooth sided or of a lapstrake construction.

Inspired by Henry Ford, Henry Luhrs' aimed to give the average man the opportunity to enjoy the luxury of boating by building an affordable and reliable boat. He was both designer and engineer, and his progressive new models exhibited his talent for innovation. He successfully changed the line of the bow from straight to curved at a time when the industry trend was a straight square effect, and he is believed to be the first designer-builder to popularize a small boat with a fly bridge.

In 1960, Luhrs acquired the Ulrichsen Boat Company of Marlboro, New Jersey. It was here that Luhrs' Alura fiberglass division was located. In 1965, Henry sold his company to Bangor Arrostook Railroad, which was to become the recreational conglomerate Bangor-Punta. It was also during this period that Silverton of Tom's River, New Jersey was purchased by John and Warren Luhrs.

Today, Warren R. Luhrs and his brother John own the Luhrs Group of marine manufacturers, which consists of Silverton Marine, Mainship Motor Yachts, and Luhrs Fishing Boats with its Alura division, as well as Hunter Marine, which exclusively manufactures sailboats.

In January of 1996, the Luhrs family transferred a portion of the Luhrs Group to its employees through an ESOP program.

GLOSSARY OF SAILING TERMS

A

Aback: describes a sail when the wind strikes it on the lee side.
Abaft: towards the boat's stern.
Abeam: at right angles to the *centerline* of the boat.
Aft: at or near the stern.
Amidships: the center of the boat, *athwartships* and fore and aft.
Anti-fouling: a poisonous paint compound used to protect the underwater part of a hull from marine growths.
Apparent wind: The direction and speed of the wind felt by the crew. It is a combination of *true wind* and that created by the movement of the boat.
Astern: behind the boat; to go astern is to drive the boat in reverse.
Athwartships: at right angles to the fore and aft line of the boat.

B

Back: when a wind backs, it shifts anticlockwise.
Back a sail: to sheet it to windward so that the wind fills on the side that is normally to *leeward*.
Backstay: a stay that supports the mast from aft and prevents its forward movement.
Ballast: extra weight, usually lead or iron, placed low in the boat or externally on the keel to provide stability.
Ballast keel: a mass of ballast bolted to the keel to increase stability and prevent a keel boat from capsizing.
Batten: a light, flexible strip fed into a batten pocket at the *leech* of the sail to support the *roach*.
Beam: 1, the maximum breadth of a boat; 2, a transverse member that supports the deck; 3, on the beam means that an object is at right angles to the centerline.
Bear away: to steer the boat away from the wind.
Bearing: the direction of an object from an observer, measured in degrees true or magnetic.
Beat: to sail a *zigzag course* towards the wind, *close-hauled* on alternate *tacks.*
Delay: to make fast a rope around a *cleat*, usually with a figure-of-eight knot.
Bend: 1, to secure a sail to a spar before hoisting; 2, to moor a boat; 3, a sleeping place on board.
Bight: a *bend* or loop in a rope.
Bilge: the lower, round part inside the hull where the water collects.
Block: a pulley in a wooden or plastic case, consisting of a *sheave* around which a rope runs. It is used to change the direction of pull.
Boot-topping: a narrow colored stripe painted between the bottom paint and the *topside* enamel.
Bottlescrew: see Rigging screw.
Broach: when a boat *running* downwind slews broadside to the wind and *heels* dangerously. It is caused by heavy following seas or helmsman's error.
Broad reach: the point of sailing between a beam *reach* and a *run*, when the wind blows over a quarter.
Bulkhead: a partition wall in a boat normally fitted athwartships

C

Caulk: to make the seams between wooden planks watertight by filling with cotton, oakum or a compound.
Cavitation: the formation of a vacuum around a propeller, causing a loss in efficiency.
Center-board: a board lowered through a slot in the *keel* to reduce *leeway*.
Center-line: center of the boat in a fore and aft line.
Center of effort (COE): the point at which all the forces acting on the sails are concentrated.
Center of lateral resistance (CLR): the underwater center of pressure about which a boat pivots when changing *course*.
Chain pawl: a short lug which drops into a toothed rack to prevent the anchor chain running back.
Chain plate: a metal plate bolted to the boat to which the *shrouds* or *backstays* are attached.
Chart datum: reference level on a chart below which the tide is unlikely to fall. Soundings are given below chart datum. The datum level varies according to country and area.
Chine: the line where the bottom of the hull meets the side at an angle.
Cleat: a wooden, metal or plastic fitting around which rope is secured.
Clevis pin: a locking pin through which a split ring is passed to prevent accidental withdraw.
Clew: the after, lower center of a sail where the foot and *leech* meet.
Close-hauled: the *point of sailing* closest to the wind; see also *beat*.
Close reach: the *point of sailing* between *close-hauled* and a beam reach, when the wind blows forward of the *beam*.
Close-winded: describes a boat able to sail very close to the wind.
Coaming: the raised structure surrounding a hatch, cockpit, etc., which prevents water entering.
Cotter pin: soft, metal pin folded back on itself to form an eye.
Course: the direction in which a vessel is steered, usually given in degrees; true, magnetic or compass.
Cringle: 1, a rope loop, found at either end of a line of reef points; 2, an eye in a sail.

D

Dead run: running with the wind blowing exactly aft, in line with the *centerline*.
Deviation: the difference between the direction indicated by the compass needle and the magnetic *meridian*; caused by object aboard.
Displacement: 1, the weight of water displaced by a boat is equal to the weight of the boat; 2, a displacement hull is one that displaces its own weight in water and is only supported by buoyancy, as opposed to a planning hull which can exceed its hull, or displacement, speed.
Downhaul: a rope fitted to pull down a sail or spar.
Draft: the vertical distance from the waterline to the lowest point of the keel.
Drag: 1, an anchor drags when it fails to hole; 2, the force of wind on the sails, or water on the hull, which impedes the boat's progress.
Drift: 1, to float with the current or wind; 2, US the speed of a current

(rate UK); 3, UK: the distance a boat is carried by a current in a given time.
Drogue: a sea anchor put over the stern of a boat or life raft to retard *drift*.
Drop keel: a retractable *keel* which can be drawn into the hull, when entering shallow waters and recovering on to a trailer.

E

Eye of the wind: direction from which the true wind blows.

F

Fair: well-faired line or surface is smoother with no bumps, hollows or abrupt changes in directions.
Fairlead: a fitting through which a line is run to alter the lead of the line.
Fathom: the measurement used for depths of water and lengths or rope. 1 fathom = 6 ft. or 1.83m.
Fid: a tapered tool used for *splicing* heavy rope and for sail-making, often hollow.
Fiddle: a raised border for a cabin table, chart table etc., to prevent objects falling off when the boat *heels*.
Fix: the position of the vessel as plotted from two or more position lines.
Forestay: the foremost stay, running from the masthead to the stemhead, to which the headsail is hanked.
Freeboard: vertical distance between the *waterline* and the top of the deck.

G

Genoa: a large headsail, in various sizes, which overlaps the mainsail and is hoisted in light to fresh winds on all points of *sailing.*
Gimbals: two concentric rings, pivoted at right angles, which keeps objects horizontal despite the boat's motion, e. g. compass and cooker.
Go about: to turn the boat through the *eye of the wind* to change tack.
Gooseneck: the fitting attaching the boom to the mast, allowing it to move in all directions.
Goosewing: to boom-out the headsail to windward on a run by using a *whisker pole* to hold the sail on the opposite side to the mainsail.
Ground tackle: general term used for anchoring gear.
Guard rail: a metal rail fitted around the boat to prevent the crew falling overboard.
Gudgeon: a rudder fitting. It is the eye into which the *pintle* fits.
Guy: a steadying rope for a spar; a spinnaker guy controls the fore and aft position of the spinnaker pole; the foreguy holds the spinnaker pole forward and down.
Gybe: to change from one *tack* to another by turning the stern through the wind.

H

Halyard: rope used to hoist and lower sails.
Hank: fitting used to attach the *luff* of a sail to a stay.
Hatch: an opening in the deck giving access to the interior.
Hawes pipe: see *Navel pipe*.
Head-topwind: when the bows are pointing right into the wind.
Headfoil: a streamlined surround to a *forestay*, with a groove into which a headsail *luff* slides.
Heads: the toilet.
Headway: the forward movement of a boat through the water.
Heave-to: to *back* the jib and lash the tiller to *leeward*; used in heavy weather to encourage the boat to lie quietly and to reduce *headway.*
Heaving line: a light line suitable for throwing ashore.
Heel: to lean over to one side.

I

Isobars: lines on a weather map joining places of equal atmospheric pressure.

J

Jackstay: a line running fore and aft, on both sides of the boat, to which safety harnesses are clipped.
Jury: a temporary device to replace lost or damaged gear.

K

Keel: the main backbone of the boat to which a *ballast keel* is bolted or through which the *centerboard* passes.
Kicking strap: a line used to pull the boom down, to keep it horizontal, particularly on a reach or run.

L

Lanyard: a short line attached to one object, such as a knife, with which it is secured to another.
Leech: 1, the after edge of a triangle sail; 2, both side edges of a square sail.
Leehelm: the tendency of a boat to bear away from the wind.
Lee shore: a shore on to which the wind blows.
Leeward: away from the wind; the direction to which the wind blows.
Leeway: the sideways movement of a boat off its *course* as a result of the wind blowing on one side of the sails.
Lifeline: a wire or rope rigged around the deck to prevent the crew falling overboard.
Limber holes: gaps left at the lower end of frames above the *keel* to allow water to drain to the lowest point of the *bilges*.
List: a boat's more or less permanent lean to one side, owing to the improper distribution of weight, e.g., *ballast* or water.
Log: 1, an instrument for measuring a boat's speed and distance traveled through the water; 2, to record in a book the details of a voyage, usually distances covered and weather.
Luff: the forward edge of a sail. To luff up is to turn a boat's head right into the wind.
Luff groove: a groove in a wooden or metal spar into which the *luff* of a headsail is fed.
Lurch: the sudden roll of a boat.

M

Marlin spike: a pointed steel or wooden spike used to open up the strands of rope or wire then splicing.
Mast Step: the socket in which the base of the mast is located.
Measured mile: a distance of one nautical mile measured between buoys or *transits/ranges* ashore, and marked on the chart.

Member: a part of the skeleton of the hull, such as a *stringer* laminated into fiberglass hull to strengthen it.
Meridian: an imaginary line encircling the Earth that passes through the poles and cuts at right angles through the Equator. All lines of longitude are meridians.
Mizzen: 1, the shorter, after-mast on a *ketch* or *yawl*; 2, the fore and aft sail set on this mast.

N

Navel pipe: a metal pipe in the foredeck through which the anchor chain passes to the locker below.
Noon Sight: a vessel's latitude can be found, using a sextant, when a heavenly body on the observer's *meridian* is at its greatest altitude. The sight of the sun at noon is the one most frequently taken.

O

Off the wind: with the sheets slacked off, not *close-hauled.*
On the wind: *close-hauled*.
Out haul: a rope used to pull out the foot of a sail.
Overall length (LOA): the boat's extreme length, measured from the foremost past of the bow to the aftermost part of the stern, excluding bowspirt, self-steering gear etc.

P

Painter: the bow line by which a dinghy, or *tender,* is towed or made fast.
Pintle: a rudder fitting with a long pin that fits into the *gudgeon* to form a hinged pivot for the rudder.
Pitch: 1, the up and down motion of the bows of a boat plunging over the waves; 2, the angle of the propeller blades.
Point of sailing: the different angles from which a boat may sail; the boat's *course* relative to the direction of the wind.
Port: the left-hand side of the boat, looking forward (opp. of *starboard*).
Port tack: a boat is on a port tack when the wind strikes the port side first and the mainsail is out to *starboard.* A boat on the port tack gives way to a boat on a starboard tack.
Position line/ Line of position: a line drawn on a chart, as a result of taking a bearing, along which the boat's position must be i.e. Two position lines give a fix.
Pulpit: a metal *guard rail* fitted at the bows of a boat to provide safety for the crew.
Pushpit: a metal *guard rail* fitted at the stern.

Q

Quarter: the portion of the boat midway between the stern and the beam; on the quarter means about 45 degrees *abaft* the beam.

R

Rake: the fore and aft deviation from the perpendicular of a mast or other feature of a boat.
Range: 1, see *transit;* 2, of tides, the difference between the high and low water levels of a tide; 3, the distance at which a light can be seen.
Rating: a method of measuring certain dimensions of a yacht to enable it to take part in handicap races.
Reach: to sail with the wind approximately on the *beam*; all sailing points between running and *close-hauled*.
Reef: to reduce the sail area by folding or rolling surplus material on the boom or *forestay*.
Reefing pennant: strong line with which the *luff* or leech *cringle* is pulled down to the *boom* when reefing.
Rhumb line: a line cutting all *meridians* at the same angle; the *course* followed by a boat sailing in a fixed direction.
Riding light to anchor light: an all-around white light, usually hoisted on the forestay, to show that a boat under 50 ft. (15m.)is at anchor. It must be visible for 2 mls. (3 km.).
Rigging screw: a deck fitting with which the tensions of standing rigging, e.g. stays, shrouds, etc. are adjusted.
Roach: the curved part of the *leech* of a sail that extends beyond the direct line from head to *clew.*
Run: to run with the wind *aft* and with the *sheets* eased well out.
Running rigging: all the moving lines, such as *sheets* and *halyards*, used in the *setting* and *trimming* of sails.

S

Scope: the length of rope or cable paid out when mor anchoring.
Scuppers: 1, holes in the toe rail that allow water to drain off the deck; 2, drain cockpit through hull.
Seacock: a valve that shuts off an underwater inlet or outlet passing through the hull.
Seize: to bind two ropes together, or a rope to a *spar*, with a light line.
Serve: to cover and protect a *splice* or part of a rope with twine bound tightly against the lay.
Serving mallet: tool with a grooved head, used when serving a rope to keep the twine at a constant and high tension.
Set: 1, to hoist a sail; 2, the way in which the sails fit; 3, the direction of tidal current or steam.
Shackle: a metal link with a removable bolt across the end; of various shapes: D, U.
Sheave: a grooved wheel in a *block* or *spar* for a rope to run on.
Sheet: the rope attached to the *clew* of a sail or to the boom, enabling it to be controlled or *trimmed*.
Shrouds: ropes or wires, usually in pairs, led from the mast to the *chain plates* at deck level to prevent the mast falling sideways; part of the standing rigging.
Sloop: a single-masted sailing boat with a mainsail and one head sail.
Spar: a general term for any wooden or metal pole, e.g., mast or boom, used to carry or give shape to sails.
Spindrift: spray blown along the surface of the sea.
Spinnaker: a large, light, balloon shaped sail set when *reaching* or *running*.
Splice: to join ropes or wire by unlaying the strands and interweaving them.
Split pin: see *cotter pin.*
Spreaders: horizontal struts attached to the mast, which extends to the *shrouds* and help to support the mast.

Stall: a sail stalls when the airflow over it breaks up, causing the boat to lose way.
Stanchion: upright metal post bolted to the deck to support guardrails or lifelines.
Standing part: the part of a line not used when making a knot; the part of a rope that is made fast, or around which the knot is tied.
Standing rigging: the shrouds and stays that are permanently set up and support the mast.
Starboard: right-hand side of a boat looking forward (opp. of *port*).
Starboard tack: a boat is the starboard tack when the wind strikes the starboard side first and the boom is out to the *port*.
Stay: wire or rope which supports the mast in a fore and aft direction; part of the *standing rigging*.
Steerage way: a boat has steerage way when it has sufficient speed to allow it to be steered, or to answer the helm.
Stem: the timer at the bow, from the keel upward, to which the planking is attached.
Sternway: the backward, stern-first movement of a boat.
Stringer: a fore and aft member, fitted to strengthen the frames.

T

Tack: 1, the lower forward corner of a sail; 2, to turn the boat through the wind so that it blows on the opposite sides of the sails.
Tacking: working to windward by sailing *close-hauled* on alternate *courses* so that the wind is first on one side of the boat, then on the other.
Tack pennant: a length of wire with an eye in each end, used to raise the tack of a headsail some distance off the deck.
Tackle: a purchase system comprising of rope and *blocks* that is used to gain mechanical advantage.
Tang: a strong metal fitting by which *standing rigging* is attached to the mast or other *spar*.
Tender of dinghy: a small boat used to ferry stores and people to a yacht.
Terminal fitting: fitting at the end of a wire rope by which a *shroud* or stay can be attached to the mast, a *tang* or a *rigging screw/ turnbuckle*.
Tide: the vertical rise and fall of the oceans caused by the gravitational attraction of the moon.
Toe rail: a low strip of metal or molding running around the edge of the deck.
Topping lift: a line from the masthead to a spar, normally the boom, which is used to raise it.
Topsides: the part of a boat's hull that is above the waterline.
Track: 1, the course a boat has made good; 2, a fitting on the mast or boom into which the slides on a sail fit; 3, a fitting along which a traveller runs, used to alter the angle of the sheets.
Transit: two fixed objects are in transit when seen in line; two transit give position fix.
Traveller: 1, a ring or hoop that can be hauled along a *spar*; 2, a fitting that slides in a *track* and is used to alter the angle of the *sheets*.
Trim: 1, to adjust the angle of the sails, by means of *sheets*, so that they work most efficiently; 2, to adjust the boat's load, and thus the fore and aft angle at which it floats.
True wind: the direction and speed of the wind felt when stationary, at anchor or on land**.**
Turnbuckle: see *Rigging screw*.

U

Under way: a boat is under way when it is not made fast to shore, at anchor or aground.
Uphaul: a line used to raise something vertically, e.g., the spinnaker pole.

V

Veer: 1, the wind veers when it shifts in clockwise direction; 2, to pay out anchor cable or rope in a gradual, controlled way.

W

Wake: the disturbed water left *astern* of a boat.
Waterline: the line along the hull at which a boat floats.
Waterline length (WL): the length of a boat from *stem* to *stern* at the *waterline*. It governs the maximum speed of *displacement hull* and effects a boats *rating*.
Weather helm: (opp. of *lee helm*).
Weather side: the side of a boat on which the wind is blowing.
Wetted surface: the area of the hull under water.
Whisker pole: a light pole used to hold out the *clew* of a headsail when *running*.
Winch: a mechanical device, consisting usually of a metal drum turned by a handle, around which a line is wound to give the crew more purchasing power when hauling taut a line, e.g. a jib *sheet*.
Windage: those parts of a boat that increase *drag*, e.g., rigging, spars, crew, etc.
Windlass: a *winch* with a horizontal shaft and a vertical handle, used to haul up the anchor chain.
Windward: the direction from which the wind blows; towards the wind (opp. of leeward).

Y

Yawl: a two masted boat with a mizzen stepped aft of the rudder stock/ post.

EXPLANATION OF SAFETY PRECAUTIONS

This manual contains safety precautions that must be observed when operating or servicing your boat.
Review and understand these instructions.

⚠ DANGER

Denotes an extreme intrinsic hazard exists which would result in high probability of death or irreparable injury if proper precautions are not taken

⚠ WARNING

Denotes a hazard exists which can result in injury or death if proper precautions are not taken

⚠ CAUTION

Denotes a reminder of safety practices or directs attention to unsafe practices which could result in personal injury or damage to the craft or components

SAFE BOATINGTIPS

BE PREPARED

Take a safe boating course. In the U.S., contact your local Boating Industry for details.

Carry all safety equipment required by the laws that apply to your area. Requirements are generally available from the Coast Guard or your local boating industry.

⚠ WARNING

As the owner of the craft, obtaining and maintaining necessary safety equipment is your responsibility. For more information about equipment required, contact local boating authorities

MINIMUM RECOMMENDED SAFETY EQUIPMENT

- Required life saving equipment, including life vests and throwables
- Required fire extinguishing equipment
- First Aid kit
- Emergency Position Indicating Radio Beacon (EPIRB)
- Manual bailing device
- Anchor with sufficient line and/or chain
- Flashlight with good batteries
- Binoculars
- VHF radio
- Appropriate navigational charts
- Flares
- Fog bell
- Noise emitting device
- Radar reflector
- Sufficient food and water provisions
- Auxiliary starting battery
- Spare fuses and bulbs
- Sunglasses and block
- Blanket

The legally required on-board safety equipment may vary by region or body of water. Please check with local authorities prior to departure for a safety examination.

LIFE JACKETS

A life jacket may save your life, but only if you wear it. Keep jackets in a readily accessible place – not in a closed compartment or stored under other gear. Remove them from any packaging, and keep throwable floatation devices ready for immediate use.

⚠ WARNING

It is very important that children, handicapped people, and non-swimmers wear lifejackets at all times. Make sure all passengers are properly instructed in use of life saving gear

FIRE EXTINGUISHERS

Approved fire extinguishers are required on most boats, local authorities can provide details. All passengers should know the location and operating procedure of each fire extinguisher. Fire extinguishers are normally classified according to fire type. Be familiar with the type of fire extinguishers you have on board.

Some boats have been equipped with an Automatic Fire Extinguisher). In the event of a fire in your engine compartment, this unit will automatically discharge. Please read your SEA-FIRE manual for operating instructions, maintenance and precautionary information.

SAFE BOATINGTIPS

FLARES

Most boats operating on coastal waters are required to carry approved visual distress signals, therefore check with your local authorities as to which types are required.

⚠ WARNING

FIRE/EXPLOSION HAZARD; Pyrotechnic signaling devices can cause injury and property damage if not handled properly. Follow manufacturer's directions regarding the proper use of signaling devices.

DRUGS AND BOATING

Consumption of alcohol while boating is not recommended. The combination of noise, sun, wind, and motion act to produce fatigue on the water, and can exaggerate the effects of alcohol.

⚠ WARNING

IMPAIRED OPERATION HAZARD

Operating any boat while is intoxicated or under the influence of drugs is both dangerous and illegal. Impaired vision or judgment on the water can lead to accidents and personal injury

BEFORE GETTING UNDERWAY

- Leave a float plan (example on p. 13)
- Perform a pre-departure checklist (example on p. 12)
- Check the weather. Do not venture out if the weather is, or will be, threatening.

WHILE UNDERWAY

- Keep a good lookout. Keep a watch to the leeward under the headsail. Keep away from swimmers, divers, and skiers.
- Know and obey local boating laws.
- Respect bad weather, and be prepared for quickly changing conditions.

⚠ WARNING

COLLISION HAZARD

Use extra caution in shallow water or where underwater/floating objects may be present. Hitting an object at speed or severe angle can seriously injure people and damage your boat

PRE-DEPARTURE CHECKLIST

- ☐ Check bilge for extra water
- ☐ Check weather conditions and tides
- ☐ Check food supply
- ☐ Foul weather gear
- ☐ Linen, sleeping bags
- ☐ Fuel
- ☐ Water
- ☐ Sunscreens and sunglasses
- ☐ Tools
- ☐ Docking and anchor gear
- ☐ Check radio operations
- ☐ Navigation charts and instruments
- ☐ **Float plans to a friend or Coast Guard** (*see next page*)
- ☐ Fuel for stove
- ☐ Cooking and eating utensils
- ☐ Check battery water level
- ☐ Oil level, tight Vp-belts
- ☐ Check for loose electrical connections in engine compartment
- ☐ Secure tools or any loose equipment in engine compartment so as not to get fouled in engine
- ☐ AC systems off; electrical cord stowed
- ☐ Doors and drawers secured
- ☐ Check steering lock to lock
- ☐ Check mast for rigging irregularities and tightness
- ☐ Halyards and sheets are clear and ready to run
- ☐ No lines or other obstructions near propeller or bow
- ☐ Anchor ready to run
- ☐ Check lifelines for tightness
- ☐ Turn on fuel and waterlines
- ☐ Stow all loose gear
- ☐ Open engine cooling water intake thru-hull valve

FLOAT PLAN

1. Name of person reporting and telephone number:

2. Description of boat

NAME TYPE

MAKE LENGTH REGISTRATION#

HULL COLOR STRIPE COLOR DECK COLOR

OTHER DISTINGUISHING MARKS

3. Number of Persons aboard

NAME AGE PHONE #

ADDRESS

NAME AGE PHONE #

ADDRESS

NAME AGE PHONE #

ADDRESS

4. Engine

TYPE H.P. FUEL CAPACITY

5. Safety equipment

PFDs ☐ Flares ☐ Mirror ☐ Flashlight ☐

Food ☐ Water ☐ EPIRB ☐ Raft/Dinghy ☐

6. Radio

TYPE FREQUENCIES

7. Trip Expectations

DEPARTURE TIME DATE FROM

DESTINATION RETURN DATE NO LATER THAN

8. Automobile:

LICENSE # STATE MAKE

COLOR PARKED AT

9. If not returned by-

Contact the Coast Guard or-

CALL - AT-

AFTER SAILING CHECKLIST

When leaving your Hunter at the dock for more than a short time, it is a good idea to review the following checklist to make sure everything is in order. This will help protect the various parts of your boat and add considerably to their attractiveness and usable life.

- ☐ Flake or furl mainsail and cover, or remove and bag.
- ☐ Remove and stow all portable deck hardware such as snatch blocks, winch handles, etc.
- ☐ Secure the boom to the topping lifts and set it firmly amidships with the main sheet purchase. (It is also a good idea to rig a line from the steering wheel or tiller to a convenience cleat to keep the rudder from swinging back and forth with the motion of the water or employ the wheel brake if so equipped.)
- ☐ Attach the shackle ends of all halyards to convenient fittings and take up slack. Find a location leading away from the mast to keep the halyard from slapping the mast.
- ☐ Coil and stow all lines in line lockers
- ☐ Cover the winches and steering pedestal when leaving the boat for several days or more
- ☐ Close all fuel lines and seacocks
- ☐ Switch off the electrical system
- ☐ Pump out the bilge
- ☐ Check air vents, secure ports and hatches, swab the deck, and clean deck stainless, particularly if you have operated in saltwater.
- ☐ Make a final check of mooring lines, chafing gear, fenders, etc.

SAFE BOATING TIPS

DOCKING

Docking your boat should be handled carefully to avoid potential damage. Under normal wind and water conditions, the following considerations should be made:

1. Whenever possible, your approach should be made against the prevailing wind and current to assist in stopping the boat. Where these conditions are contrary, the strongest should be used to determine approach.

2. Approaching the dock: dock lines should be at ready, loose gear stowed and decks cleared. Determine the direction of the wind and current and when you decide which side of the boat will be against the dock, rig dock lines and fenders on the appropriate side. One dock line should be attached to the bow cleat, another to the stern cleat opposite the side that will lie against the dock. *NOTE: If the boat is to lie against a piling, rig a fender board across two or more pilings.*

3. Tying up: attach bow and stern lines to dock, hauling boat in with fenders against dock. Rig crossing spring lines to limit motion forward and aft. Be sure to allow some slack in all lines to compensate for tidal activity if present. Never use bow rail, stern rail, or stanchions to secure a vessel, even for brief periods. For other types of moorings, or for abnormal wind or water conditions, consult an approved boating guide.

ANCHORING

Your Hunter comes with an on deck anchor well and a Danforth type anchor as standard equipment. The anchor is selected to suit the size and weight of your boat under normal anchoring conditions, and is most effective in muddy or sandy bottoms.

When anchoring, pay particular attention to the scope of your anchor rode (the relationship between of the water and the length of the rode). A good rule of thumb is to allow a scope of about 7:1 (a rode seven times as long as the vertical distance from the bow to the bottom). A helpful aid is to mark the rode every 20 feet or so with knots or other types of indicators. Before dropping anchor, make sure the bitter end is secured to the cleat in the anchor well. Also, be sure to consider wind direction, currents, mean low tide depths and other local conditions when anchoring, as well as positions of any boats already anchored nearby.

To weigh anchor, motor or sail (under main only) forward slowly. When at a point directly above the anchor, a quick tug should free it from the bottom. Take care not to damage the topsides when hauling.

⚠ WARNING

Anchoring in unusual water/ and or weather conditions will require additional precautions. Consult an approved guide for suggestions

SAFE BOATING TIPS

DIESEL ENGINE

An engine owner's manual is supplied with your boat and should be read thoroughly. It contains technical specifications, running instructions and a maintenance schedule on lubricants and fluids. For long engine life, follow routine maintenance schedules.

You should check engine oil, transmission fluid and coolant levels. Water, rust, scale and dirt will cause serious damage to the injectors on diesel engines. You should check your filters frequently and change when necessary. Check fuel line connections for proper tightness.

⚠ WARNING

EXPLOSION/FIRE HAZARD – Fuel system connections that are to loose or to tight can leak, resulting in fuel loss, environmental pollution and explosion/fire hazard.

⚠ DANGER

EXTREME HAZARD: carbon monoxide gas (CO) is colorless, odorless and extremely dangerous. All engines and fuel burning appliances produce CO as exhaust. Direct and prolonged exposure to CO will cause BRAIN DAMAGE or DEATH. Signs of exposure to CO include nausea, dizziness and drowsiness. Refer to BOATING SAFETY for more information.

When you start your engine, run it a minimum of 15 minutes to bring it up to operating temperature. This insures that any condensation is evaporated. Your engine should "run out" at ¾ throttle at least once a month to clean out carbon buildup and moisture.

FUELING YOUR DIESEL ENGINE

⚠ WARNING

EXPLOSION/FIRE HAZARD

- Store flammable material in safety-approved containers. Keep containers in a locker designed by the boat manufacturer for that purpose. Never store flammable material in a non-vented space.
- Observe "No-Smoking" while fueling.
- Run exhaust blower at least 4 minutes before starting engine. Check bilge and engine compartments for fumes.
- Keep ventilation system free of obstructions. Never modify the vent system.
- Fill less than the rated capacity of the tank. Allow for fuel expansion.
- If fuel enters bilge, do not start engine. Determine cause and severity. Contact a knowledgeable marine service to remove fuel. Do not pump overboard. Contact Coast Guard for additional advice (See Environmental Considerations Fuel & Oil Spillage.)
- Inspect fuel system regularly for leaks.

⚠ CAUTION

Follow engine manufacturer's recommendations for types of fuel and oil. Use of improper products can damage the engine and void the warranty.

Notice: Use fresh fuel. Fuel that has been in a tank too long can form gum and varnish, which may affect performance.

Inspect diesel fuel filters regularly. Diesel fuel must be kept as clean as possible. Keep fuel tank full.

SAFE BOATING TIPS

STARTING YOUR DIESEL ENGINE

1. Visually check engine compartment to see that the throttle linkage, shifting controls, electrical connections and fuel lines are properly secured.
2. **Before each start** check oil in engine and transmission.
3. Insure that the engine shut-off cable is properly secured and operating.
4. Place the shift lever in the neutral position. Pull out the button beside the shift lever to disengage the shift. On single lever controls, lift the collar under the shift lever knob and move the lever forward to advance the throttle for neutral warm-up.
5. Insert the starter key and turn to the "on" position.
6. Press the starter button and hold until engine starts, then release. The buzzer and/or light should then go off. **Press the starter button no longer than 5 seconds continuously.**
7. Allow cold engine to warm up a minimum of five minutes.
8. When warm-up is completed, return the hand lever to neutral position, and push the button back to re-engage the shift. The shift is ready for shift and throttle operation.
9. Check that the lube oil pressure warning light and the charge lamp go off. If any of the warning lamps do not go off above 1,000 rpm, the engine is malfunctioning and should be stopped immediately. Consult your nearest engine dealer.

NOTE: The H386 and below are equipped with an "engine stop" pull lever. When pulled all the way out, this will stop the engine at any time.

⚠ CAUTION

Follow engine manufacturer's recommendations for types of fuel and oil. Use of improper products can damage the engine and void the warranty.

MOTORING YOUR DIESEL ENGINE

Before departure, remember to unplug the shore power. When the engine is warm, but prior to releasing the dock lines, move the shift lever to forward and to reverse to insure that it is working properly. To increase RPMs, push throttle lever forward and pull back to decrease RPMs.
IMPORTANT: When sailing, it is best to start the engine before the sails are lowered. This way, it is possible to maneuver if the engine should not start.

⚠ CAUTION

Your rigging will conduct electricity. Always check for overhead high tension wires before proceeding. Once clear, you may increase your speed in a reasonable and safe manner as desired.

ELECTRICAL SYSTEM

Your Hunter is fitted with an electrical system designed for both AC and DC. While in port, you can operate any tool, appliance or other device designed to function on regular house current simply by plugging your dockside power cord into a convenient outlet on shore and turning your AC main breaker on.

⚠ WARNING

ELECTROCUTION HAZARD: If polarity is reversed, DO NOT use the shore power source. Immediately turn off the power source and disconnect the shore power cord. Reversed polarity is a dangerous and potentially lethal condition that may cause shock, electrocution, or death.

ELECTRICAL SYSTEM (continued)

To minimize shock hazard, connect and disconnect cable as follows:

1. Turn off the boat's shore power connection before connecting or disconnecting shore power cable.
2. Connect shore power cable at the boat first.
3. If polarity warning indicator is activated, immediately disconnect cable and have the fault corrected by a qualified electrician.
4. Disconnect shore power cable at shore outlet first.
5. Close inlet cover tightly.

DO NOT ALTER SHORE POWER CABLE CONNECTORS.

Storage: Your shore power cable set is intended for use outdoors. To prolong the life of the set, store indoors when not in use.

General: The metallic parts of your cable set are made to resist corrosion. In a salt-water environment, periodically wiping the exposed parts with fresh water, drying and spraying with a moisture repellent can increase life of the product.

A soiled cable can be cleaned with a grease cutting household detergent. A periodic application of vinyl protector to both ends will help to maintain cables original appearance.

In case of salt water immersion, rinse plug end and/or connector end thoroughly in fresh water, shake or blow out excess water and allow to dry. Spray with moisture repellent before re-use.

⚠ WARNING

Do not allow your dockside power cord to come in contact with the water. Never operate any AC power tool or other electrical equipment while you or the device are in contact with the water, as this may cause electrocution resulting in shock or death.

When leaving port, disconnect the dockside power cord and turn the main DC breaker on. This allows you to use the ship's lights and other equipment designed to operate on direct current. Keep in mind that your DC power source is a 12-volt battery, just as with your automobile, and it must be charged regularly by operating the engine (or by running the battery charger, if you have that option installed). Unless a state of charge is maintained, there may not be enough power to operate the starter motor. Dangerous situations can result if the engine cannot be started when needed.

Make a regular visual check of batteries to insure proper water level and inspect terminals for signs of corrosion. If your boat sits for long periods without use, it is often a good idea to remove the batteries and attach them to a trickle charger to keep them fully charged and ready to use.

⚠ WARNING

EXPLOSION/FIRE HAZARD – ensure adequate ventilation of battery to prevent buildup of gases, especially hydrogen.

⚠ WARNING

WHEN CHARGING THE BATTERY:

- Battery electrolyte contains sulfuric acid. Protect your eyes, skin and clothing. In case of contact, flush thoroughly with water and get prompt medical attention, especially if your eyes are affected.
- Batteries generate hydrogen gas that can be highly explosive. Do not smoke or allow flames or sparks near a battery, especially during charging.
- Charge the battery in a fully ventilated place.

SAFE BOATING TIPS

ELECTRICAL SYSTEM (continued)

Hunter Marine recommends that on all boats with either/both a house and start battery, the cables be disconnected during winter storage or any time the boat is out of the water for an extended period of time. Because of the continuous electrical drain placed on the 12 volt system by certain electrical components such as stereos and CO monitors you will be preserving your batteries life expectancies.

We recommend that owners who leave their boats in the water during the sailing season charge the boats internal batteries at least once every seven days during the sailing season (we do not recommend leaving power connected to the boat if it is unattended). Completely depleting a batteries internal charge can drastically shorten its life span. This includes gel cell and glass mat batteries.

For owners who live aboard or wish to leave their boat battery switches in the on position while unattended (again, we do not recommend this) should consider installing a N20504W Nicro Solar vent to reduce the chances of the CO monitor's sounding. Only exchanging the air inside the boat on a regular basis or leaving the battery switches in the off position totally eliminates the false sounding of the monitors while 12-volt systems are operating.

COOKING STOVE

⚠ WARNING

EXPLOSION/FIRE/ASPHYXIATION HAZARD

- Open flame cooking appliances consume oxygen. This can cause asphyxiation or death.
- Maintain open ventilation.
- Liquid fuel may ignite, causing severe burns.
- Use fuel appropriate for type of stove.
- Turn off stove burner before filling.
- Do not use stove for comfort heating.
- Use special care with flames or high temperatures near urethane foam. Once ignited, it burns rapidly, producing extreme heat, releasing hazardous gasses and consuming a large amount of oxygen.

Carefully read and understand the manufacturer's instructions prior to operating your stove. Save the instructions for review, and also to pass on to any subsequent owners.

Use only the fuel recommended by the manufacturer, and store the fuel in an approved container.

Do not smoke while working with fuel.

Immediately clean up any spilled fuel.

SAFE BOATING TIPS

TOILET

IMPORTANT: When not in use, lever must be left in the “dry” position to prevent flooding.

Before using, place the lever in the “wet” position and pump slowly to partly fill and wet the inside of the bowl. Return to the “dry” position.

After using, return the lever to the “wet” position for flushing and pump until the bowl is thoroughly cleaned. Continue with several more full strokes to flush discharge lines. Return lever to “dry” position and pump slowly until bowl is empty.

- There is a possibility of being fined for having an operable direct overboard discharge of waste in some waters. Removing seacock handle, in closed position, or other means must be used to avoid fine.
- It is illegal for any vessel to dump plastic trash anywhere in the ocean or navigable waters of the United States.

⚠ CAUTION

Do not place facial tissue, paper towels or sanitary napkins in head. Such material can damage the waste disposal system and the environment.

OPENING HULL PORTS

If your boat is equipped with opening hull ports, they must remain closed and secured while under sail. Your boat could take on water when it heels, causing damage to the interior due to flooding or even possible sinking of your vessel.

⚠ CAUTION

All hull ports must remain closed and secure while sailing.

PUMPS

All pumps should be checked frequently to insure proper operation. This is an especially important regular maintenance item since a properly operating pump could save your vessel from serious damage.

⚠ CAUTION

Run pump only as long as necessary to remove water. Dry running can damage the pump motor

Inspect all bilge pump hoses for chafing and dry rot. See that all hose clamps are tight. Check that the bilge pump impeller area is clean and free of obstructions. Inspect electrical wiring for corrosion. Ensure that the float switch functions properly.

⚠ WARNING

SINKING HAZARD – Ensure proper bilge pump operation.

SAFE BOATING TIPS

WATER SYSTEM OPERATION

Fill fresh water tank at deck fill. The tank filler cap will be marked “water”. When tank is full, water will back up through the vent hose and exit through a vent located on the side of the hull. Use tank gauge for filling. D.C. main should be turned on first.

To activate the water system, turn on D.C. main, flip the “water pressure” switch on the electrical panel. This will start the pump and pressurize the system. When the pressure builds, the pump will shut off. With continued use of fresh water the pressure in the system is reduced, automatically restarting the pump. Make sure there is water in the system while pump is in operation to prevent damage to the motor. The pump will also run if a leak develops in the system.

NOTE: Intermittent operation of the freshwater pump while all faucets are closed usually indicates a leak somewhere in the lines. Trace the lines to locate the leak and repair.

⚠ CAUTION

Run pump only as long as necessary to remove water. Dry running can damage the pump motor

The water heater operates either on 120 or 240 volts AC or when the engine is running. To obtain hot water from the engine, it must run a minimum of one-half hour.
Pressure water pumps are the demand type. Once the circuit breaker switch is on, opening the faucet will produce water flow.

To operate shower, turn on hot and cold faucets until desired temperature is reached, while the showerhead is retracted at sink. Pull the showerhead out and use. The faucets must be turned off to prevent system drainage.

Opening the faucet will allow the pump to empty the tank. Flushing the tank and lines will be necessary for winterization. Refer to Maintenance & Winterization section for more information.

⚠ WARNING

SINKING HAZARD –To ensure the safety of your vessel, always disconnect shore water and power connections when leaving your boat unattended.

WASTE DISCHARGE

The Hunter is equipped with a head waste holding tank, hose lines, and thur-fittings for either overboard discharge, using the standard equipped hand pump, deck pump out at dockside or Macerator Pump. Tank levels will be indicated on the gauge located below the main electrical panel. Familiarize yourself with the locations of the deck pump out, overboard discharge thur-hull, and vent locations pictured in the Waste Water System section, as well as your local boating regulations concerning the overboard discharge of raw sewage.

ENVIRONMENTAL CONSIDERATIONS

FUEL AND OIL SPILLAGE

The spilling of fuel or oil into our waterways contaminates the environment and is dangerous to wildlife. Never discharge or dispose of fuel or oil into the water. It is dangerous and unlawful. Two common types of accidental discharge are overfilling the fuel tank and pumping contaminated bilge water into the sea.

⚠ WARNING

EXPLOSION/FIRE/POLLUTION HAZARD:
Fill fuel tank to less than rated capacity. Overfill forces fuel out the tank vents, which can cause explosion fire, or environmental pollution. Also allow for fuel expansion

DISCHARGE AND DISPOSAL OF WASTE

Waste means all forms of garbage, plastics, recyclables, food wood, detergents, sewage, and even fish parts in certain waters. We recommend that you bring back everything you take out with you for proper disposal ashore.

Your marine holding tank (if so equipped) must, in many areas, be pumped out by an approved pump-out facility normally found at marinas.

EXHAUST EMISSIONS

Hydrocarbon exhaust emissions pollute our water and air. Keep your engine properly tuned to reduce emissions and improve performance and economy.

ANTI-FOULING PAINTS

The use of anti-fouling paints is common for boats kept in water. Be aware of environmental regulations that may govern your paint choice. These regulations may affect which paint may be used, and also the application or removal. Contact your local boating authorities for more information

⚠ WARNING

EXPLOSION/FIRE/HAZARD:
Ventilate when painting or cleaning. Ingredients may be flammable and/or explosive.

CLEANING CHEMICALS

Cleaning chemicals should be used sparingly and not discharged into waterways. Never mix cleaners and be sure to use plenty of ventilation in enclosed areas. Do not use products that contain phosphates, chlorine, solvents, non-biodegradable or petroleum-based products.

Common households cleaning agents may cause hazardous reactions. Fumes can last for hours, and chemical ingredients can attack people, property and the environment.

INSTRUCTIONS FOR PREPARATION FOR BOTTOM PAINTING

WARNING!

Do not use any sanding, sandblasting or other abrasive reparation of the bottom, as this will void your hull blistering warranty. See the warranty information at the beginning of this manual.

BOTTOM PAINTING

Choose a bottom paint system that suits the environment in your area.
Follow the procedure recommended by the manufacturer of the paint, while making sure not to void the Hunter Hull Blistering Warranty. The procedure for preparing and painting the bottom varies between paint manufacturers, but should always include dewaxing, etching and sometimes priming of the surface.

EPOXY BARRIER COAT

Sanding of the gel coat bottom surface will be permitted should a customer wish to have an epoxy barrier coat applied to the hull, (example Interlux Interprotect 1000, 2000, West System or VCTar). This will not void the Five-Year Blister Warranty.
Hunter Marine refers to epoxy barrier coatings as mentioned above, not epoxy primer paints.
If an epoxy barrier coat is applied to a Hunter vessel, it must be registered with the Warranty Department prior to application of the product. If the dealer applies bottom paint only, sanding ***will not*** be allowed and the no sanding system must be used.

⚠ WARNING

Cleaning agents and paint ingredients may be flammable and/or explosive, or dangerous to inhale. Be sure to use adequate ventilation, and appropriate safety clothing.
(gloves, safety glasses,respiration,etc)

ENGINE, TRANSMISSION & DRIVETRAIN

ENGINE

Follow the fuel and lubrication requirements in the Engine Manual. Check the engine oil level before and after operation and use a quality motor oil (refer to Engine Manual). Be certain the proper amount of oils is in the crankcase at all times

Engine Alignment: the engine should be aligned by experienced marine service personnel. Final alignment should be done after launching, with all normal gear aboard. A description of the procedure follows:

The coupling flanges must come together evenly at all points, a feeler gauge is used to check the gap. If adjustment is necessary, the engine is tilted up or down and/or side-to-side until the flanges meet evenly. Severe vibration will result from misalignment and can cause strut bearing and shaft damage. Alignment should be checked again after several weeks of use. Routine checks of coupling bolts are a must to ensure they are tight.

Shaft Alignment:

1. Separate the coupling, move the shaft end back to clear the pilot in the center.
2. Establish the shaft in the center of the shaft log by raising the shaft until it touches the top of the log – note position – lower the shaft until it touches the bottom of the log – note position – repeat sideways and locate shaft in the center; block shaft in this position, using a block of wood under the shaft packing gland.
3. Now, adjust the engine mounts to allow the pilot on the coupling halves to slip together without moving shaft up down or sideways.
4. Adjust the engine mounts as necessary until a .004" feeler gauge will not enter anywhere along the edge of the flange between the faces.
5. Tighten the locks on the adjustable mounts
6. Recheck coupling with feeler, readjust if necessary.
7. Check stuffing box (allow to drip 3 to 5 drops per minute).

Any questions or problems concerning the engine, please contact the U.S. distributor, Mastery Marine at (727) 522-9471, or your local Yanmar service agent.

TRANSMISSION

Follow the lubrication requirements of the engine manual. The oil level should be checked immediately after operation.

STUFFING BOX

The stuffing box is held to the stern bearing by a rubber hose secured with hose clamps. (See the Shaft and Propeller section). The clamps should be tight and no water should leak from this location. While underway a slight drip from the stuffing box at the shaft exit is necessary (three to five drops a minute) and is normal. To adjust, loosen the locknut, tighten the gland nut one-quarter turn, a retighten the locknut. If excessive water flow persists after adjustment, replace the packing with 3/16" (or 5mm) square flax packing and then adjust as above.

NOTE: Some models use a packless sealing system. Page 56 or Pages 56A, B, C, reflects the type of stuffing box used on this model.

ADJUST THE VERTICAL & HORIZONTAL ENGINE MOUNTS AS NECESSARY TO OBTAIN A MAXIMUM GAP OF 0.004" (.10 MM) BETWEEN THE COUPLING FLANGE FACES. USE A 0.004" FEELER GAUGE ALL THE WAY AROUND THE COUPLING TO ESTABLISH THE CORRECT TOLERANCE.

CHECK FOR THE COUPLING GAP WITHOUT THE COUPLING BOLTS IN PLACE.

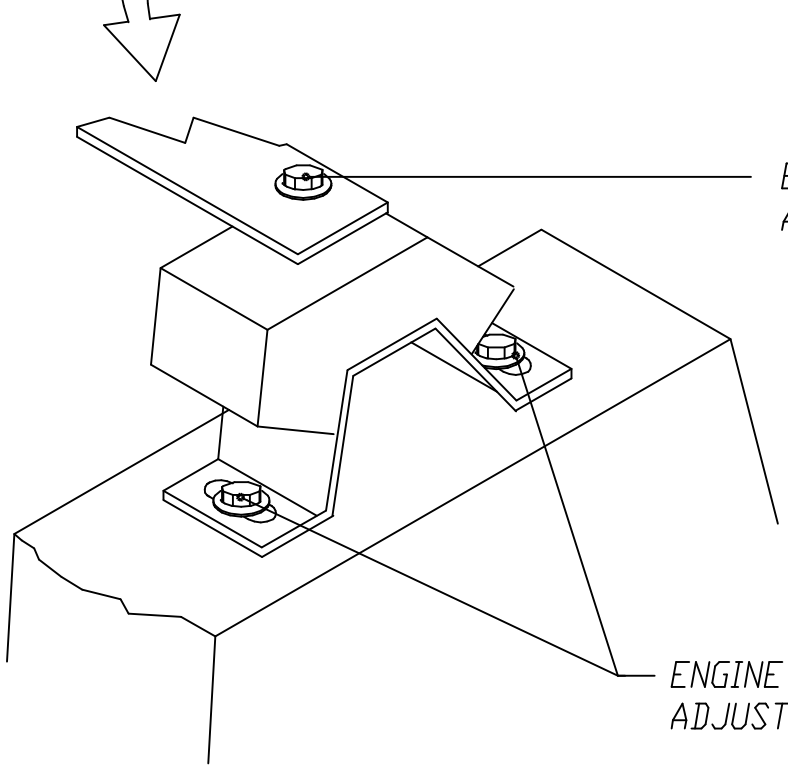

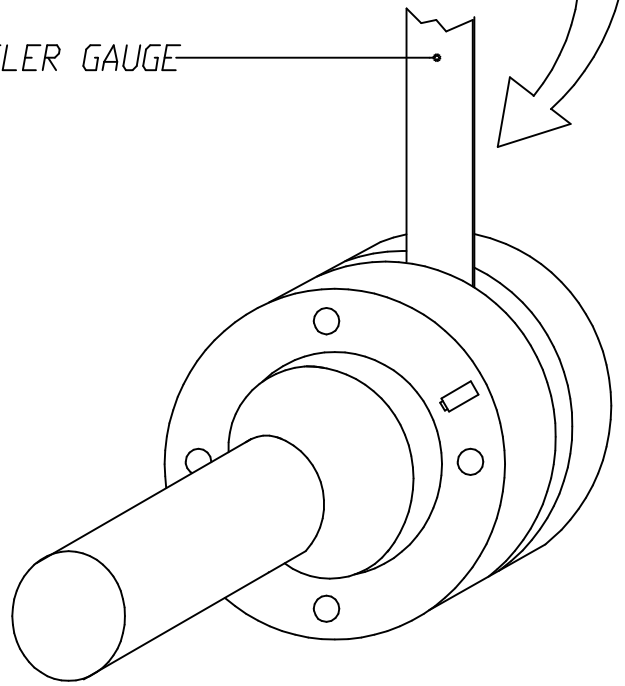

DRAWING TITLE: STANDARD ALIGNMENT DIAGRAM FOR INBOARD ENGINES	
DRAWING NO. 3808024	REVISION NO. NONE
DRAWN BY: ENGINEERING DEPT.	DATE: 10/22/98

This document discloses information for which HUNTER MARINE CORP. has proprietary rights.

HUNTER

MAINTENANCE

COMPASSES

A boat compass rarely exists in an environment that is completely free from magnetic materials or influences.

The compass on your boat should be adjusted by a certified compass adjuster and have a deviation table made for it.

If you must depend solely on your compass for navigation, make a quick check for any objects near the compass that may cause additional, unmeasured deviation. Typical objects that may fall in this category include: knives, small radios, flashlights or other tools.

STEERING

Refer to the manufacturer's instruction for maintaining pedestal steering system. Routinely inspect steering system components.

⚠ WARNING

CONTROL HAZARD – Inspect and maintain steering system regularly. An improperly maintained system may fail, causing sudden loss of steering control, resulting in personal injury and property damage.

ELECTRICAL SYSTEMS

The electrical system is a 12-volt, negative ground installation, plus a shore power system of either 120v or 220v. The owner should inspect batteries, terminals and cables weekly for signs of corrosion, cracks, and electrolyte leakage. Battery terminals are to be kept clean and greased. Refer to separate instructions on batteries, wiring diagram, and electronics.

⚠ WARNING

SHOCK/FIRE HAZARD

Replace breaker or fuse with the same amperage device. Never alter over current protection.

⚠ WARNING

SHOCK/FIRE HAZARD

- Disconnect electrical system from its power source before performing maintenance. Never work on the electrical system while it is energized.
- Electrical appliances must be within the rated amperage of the boats circuits.
- Observe boat carefully while the electrical components that can be left unattended are the automatic bilge pump, fire protection and alarm circuits.
- Only a qualified marine electrical technician may service the boat's electrical system.

⚠ CAUTION

- Turn off engine before inspecting or servicing battery.
- Disconnect battery cables before working on electrical system to prevent arcing or damage to alternator.

MAINTENANCE

PLUMBING SYSTEMS

All pumps should be checked frequently to insure proper operation. This is an especially important regular maintenance item since proper functioning of a pump could save your vessel from serious damage in the future.

Inspect all hoses for chafing and deterioration. See that hose clamps are tight. Check that the pump impeller area is clean and free of obstructions.

Inspect electrical wiring for corrosion. Make sure float switches move freely and are making an electrical connection.

The owner should become familiar with the layout of the water and waste systems by walking through the boat with the diagrams provided in this manual. It is especially important that the owner knows all the thru-hull valve locations and inspects for leaks frequently. Refer to plumbing diagrams in Specifications and Technical section of this manual.

General Thru-hull Lists (varies from boat to boat---see diagrams in Systems and Circuits section).

1) Engine cooling system
2) Galley sink
3) Head sink
4) Head toilet (water intake)
5) Holding tank discharge
6) Scupper drains

FUEL SYSTEMS

The owner should inspect the condition of fuel lines for cracks or leaks. A primary source of fuel-related problems is water in the system. The owner should use only well maintained fueling facilities and make sure fuel fill caps are tightly secured after filling. Check and maintain fuel filters periodically. Refer to your Engine Manual for additional information. Periodically, add biocide to prevent bacteria and fungi from contaminating diesel fuel that may contain some water. Carefully follow manufacturer's instructions and clean filter regularly.

MAINTENANCE

CLEANING FIBERGLASS SURFACES

Fiberglass surfaces should be cleaned regularly. Normal accumulations of surface dirt can be removed simply by occasional rinsings with water. If you operate your boat in salt water, more frequent rinsing will be required. To remove stubborn dirt, grease or oil, use a mild detergent and a soft brush. Rinse with fresh clean water. Avoid the plexiglass companionway slider, windshield, deck hatches and fixed ports when using a deck brush, since these surfaces can scratch.

It is a good idea to wax the fiberglass once or twice a year to maintain a deep, glossy appearance. Your local marine supply should be able to provide an appropriate wax.

⚠ WARNING

EXPLOSION/FIRE HAZARD

Cleaning agents and paint ingredients may be flammable and/or explosive, and dangerous to inhale. Be sure to use adequate ventilation, and appropriate safety clothing (gloves, safety glasses, respirator, etc.)

CLEANING ACRYLIC

Use only mild soap and water to clean acrylics. Do not use products containing solvents such as ammonia, which is found in many window cleaners.

⚠ CAUTION

Use care when cleaning acrylic. Dry cloth and many glass cleaners will scratch. Solvents will attack the surface.

SAIL CARE

Sunlight is a sail's worst enemy, so **cover the mainsail when not in use.** An ultraviolet guard, fitted down the leech of a roller headsail will protect the exposed part from the weathering effect of the sun and from dirt and grit.

Mildew, can be prevented by storing sails dry and by hand washing twice a season. Check all sails regularly for chafe, particularly where they chafe on deck fittings or rigging, at reef points, batten sleeves and the foot of the headsail. Sail batten pockets should be inspected on a regular basis.

To stow the mainsail, start at the leech and flake it onto the boom, left and right, in about 18-in. (46 cm) folds, while pulling the leech aft. Secure with a sail tie and continue to the luff. Lash to the boom with sail ties or shock cord.

GENERAL HARDWARE MAINTENANCE

Check all fittings regularly to be sure screws are tight. Occasionally lubricate (use silicone lubricants) all moving parts on such fittings as blocks, turnbuckles and cam cleats, as well as the locking pins of snatch blocks, track slides, spinnaker poles, etc. Inspect cleat and fairleads for roughness and smooth with fine-grained emery paper if necessary. Also, replace any missing or damaged cotter pins in turnbuckles and shackles, and either tape them or use them or use protective covers manufactured for that purpose. Grease winches a minimum of once yearly.

WINCH MAINTENANCE

Follow the maintenance instructions prescribed by winch manufacturer. We recommend a minimum of an annual cleaning and light greasing.

VINYL CARE

These patterns, like all upholstery fabrics and vinyl, require a regularly scheduled cleaning program. A thorough cleaning should be administered on a daily, weekly or monthly basis depending on use and exposure to dirt and/or staining agents. It is important to begin treatment of a stain as soon as possible after a spill. It is important that efforts begin immediately after a spill to remove any potential staining agent. It is advisable to clean these products as soon as the first signs of dinginess occur, otherwise, delaying clean up will require a much greater effort to restore the product to its original appearance.

Regular cleaning requires the use of a mild cleaner such as Murphy's Oil soap and water. In situations where the vinyl has not been washed regularly and there is a build up of dirt, stronger vinyl cleaners such as Simonize's Tuff Stuff or Turtle Wax's vinyl/fabric cleaner are recommended. We do not recommended the use of any other cleaners. The use of cleaners other than those recommended may result in irreparable damage to the product.

In order for the above listed cleaning solutions to work effectively on stubborn stains, please allow time for the cleaning solution to soak in thoroughly. Be sure to remove the cleaning solution before it has time to dry. Regardless of the type of cleaner used, it is necessary to finish up with a thorough rinse using fresh water on a clean sponge or rag. A soft bristled nylon or natural fiber brush can be used to remove built-up dirt and staining agents.

Finally, please remember that all our fabric grain vinyls require a greater cleaning effort to maintain than comparable smooth grain vinyls. These products will provide an attractive and durable alternative to conventional fabrics and vinyls if properly maintained. One must realize that the proper installation and use of our fabric grain vinyls require additional attention to the establishment and maintenance of a well thought out cleaning program.

⚠ CAUTION

Do not use acetone or other harsh cleaners on the vinyl soft headliner. Use soapy water or other mild detergent to avoid damage to the vinyl.

FABRIC CARE

Vinyl: Clean with mild soap and water. Wipe with vinyl or upholstery cleaner monthly, and especially before and after storage.

Leather: Mild soap water. Blot dry. Do not scrub as this will stretch and scratch. Wipe with leather cleaner/oil to preserve and help prevent cracks before and after storage.

Fabric: Blot dry. Do not machine wash. Use only mild soap and water. Wipe with a clean white cloth. If stain persists, dry clean. Be sure to treat cleaned surfaces with scotch guard. Stretched or loose covers may be steam cleaned. If foam is removed, it will restuff more easily if wrapped with thin plastic.

Storage: Cover with airflow fabric to reduce dust build up. Do not use plastic, as this will cause cushions to sweat and mildew.

Cushions: If wet, prop cushions vertically to promote airflow around each cushion. Cushions can be cleaned by most dry cleaners. **Dry clean only.**

REPAIR OF POLTURETHANE (MINWAX) FLOORS

Surface Scratches: Sand floor with 220 grit sandpaper. Remove all dust with clean cotton cloth or blow off with air. Apply one coat of minwax evenly over sanded floor. Let dry completely, at least 24 hours

Deep Scratches: Remove all blemishes by sanding floor with 220, until all minwax is removed and you have a raw floor. Remove all dust with clean cloth or blow off with air. Apply one coat evenly over floor. Let dry four to six hours. Repeat steps one and four. Apply third coat of minwax only if needed by repeating steps one and four.) After final coat, let floor dry completely at least one day.

ELECTROLYSIS AND GALVANIC PROTECTION

Salt water allows electric current to flow from anodic to cathodic material. For any two metals from two components, their relative positions in the galvanic rating table, will determine which loses material (the anode) and which remains largely undisturbed (the cathode). The distance between the two metals on the galvanic table determines the rate of wear. Thus a sacrificial zinc anode is often fitted to the underwater area of a boat to attract any destructive currents away from bronze or steel propeller shafts, for example. It is not enough to know that your boat does not suffer from electrolysis; a newcomer in the adjacent marina berth may start a too-friendly association with metal components on it. An easy place to fit an anode is on the propeller shaft, or covering the propeller nut. The anode should not be painted; this would render it ineffective.

To prevent electrolysis in seawater, the difference between the voltages of the two adjacent metals should not exceed 0.20 V. For example, zinc and carbon steel used together risk corrosion, while lead and active stainless steel are compatible. Metals with a high voltage corrode faster and need a larger area to diffuse the electrochemical reaction.

TEAK CARE (240,260,and 270 ONLY)

Teak wood is a high quality, extremely durable wood with high oil content. In order to help you protect the original beauty of your teak interior, we have sealed the wood with a 3 to 4 coat system of high quality Seafin Teak Oil, manufactured by Dalys. This material is penetrating oil that dries to a low sheen to seal and protect the wood from moisture and weathering. It creates a durable, nonslip surface to repel water and resist wear. It won't chip, peel or blister. It reduces work and maintenance cost because it is easy to repair and maintain and repair. With proper maintenance it will outlive urethane varnish on interior and even exterior surfaces

MAINTENENCE

When oiled surfaces require renewing, simply wipe the surface area free of loose dirt, dust or other contaminants. Dampen a cloth with the Seafin Teal Oil and wipe on. Let stand for 5-15 minutes, then polish dry. If your dinette table has an epoxy finish, clean with furniture polish

REPAIRS

When woodwork is damaged from scrapes or abrasions that go into or thru the finish, take the following steps:

1. Take 180 to 200 grit wet/dry sand paper to smooth out rough spots.
2. Wipe clean of dust and dirt with a clean rag. Note: before applying oil, wood surface must be dry.
3. Wipe or brush on oil, allow to penetrate 5-15 minutes while surface is still wet.
4. Sand until smooth with 400A wet/dry sandpaper.
5. Wipe dry with a clean rag. Allow 8-12 hours drying time.
6. Apply second coat, sand, and repeat procedure.

This procedure may be repeated as many times as needed to bring damaged area back to its original finish. If you have trouble with getting the same sheen, you may use a soaked and wrung out cloth to apply a very light coat to get an even sheen.

For more information about the product contact:

Dalys
3525 Stoneway North
Seattle, WA 98103
(206) 633-4200

INTERIOR FURNITURE & BULKHEAD SPRAY FINISH

TEAK CARE

Teak wood is a high quality, extremely durable wood with a high oil content. In order to help you protect the original beauty of your teak, we have sealed the interior with a (3 to 4) spray coat finish, using sealer and varnish for marine cabinets. The materials are manufactured by "Chemcraft International Inc". This material will seal and protect the wood from moisture and weathering. It is easy to maintain and reduces work and maintenance costs.

REPAIRS

When woodwork is damaged from scrapes or abrasions (that go into or through the finish), take the following steps:

1) Sanding with the grain, take 320 grit sand paper to smooth out rough spots. If the spot is down to the raw wood, rag (100% cotton) wipe the spot with acetone and allow to dry. (Note: acetone only needs to be applied to the raw teak).
2) Reseal raw wood with Mohawk Spray Sealer (aerosol can) and allow to dry.
3) Lightly sand with 320 grit, sanding larger than original spot.
4) Wipe clean of dust and dirt with a clean rag.
5) Using Mohawk touch up and repair supplies, use clear lacquer spray (aerosol can). Apply (1) coat on the spot evenly and allow to dry.
6) This process (steps 3 – 5) may be repeated as many times needed to bring damaged area back up to its original finish. On your final spraying, be sure to feather into exsisting finish.

SOP FOR POLYURETHANE (MINWAX) FLOORS

SURFACE SCRATCHES

1) Sand floor with 220 grit sandpaper until all scratches are removed.
2) Remove all dust with a clean cotton cloth or blow off with an air gun, then wipe down with a tack cloth.
3) Apply one coat of minwax evenly over the sanded area.
4) Let the minwax dry completely (at least one day)

DEEP SCRATCHES

1) Sand floor with 220 grit sandpaper until all the minwax is removed and down to raw wood, removing all blemishes.
2) Remove all dust with a clean cotton cloth or blow off with an air gun then wipe down with a tack cloth.
3) Apply one coat of minwax evenly over the floor.
4) Let minwax dry 4-6 hours
5) Repeat steps 1-4, light sand
6) Apply a 3rd coat if needed by repeating steps 1-4.
7) Let the minwax dry completely (at least one day)

Chemcraft International
Telephone: 910-723-1846
U.S. Watts: 1-800-334-8556

Mohawk Finishing Products, Inc.
U.S. Watts: 1-800-545-0047

STORAGE/WINTERIZATION

IMPORTANT

Winter storage is recommended to be done in one of the following three ways, either: 1) by blocking the boat via a cradle 2) with chained stands on level ground; or 3) by storing the boat in the water with a bubbler system to prevent icing. Damage to your boat, including engine misalignment caused *by twisting, is not covered by the warranty*.

SAILS

Sails should be properly folded and stowed in a dry, well-ventilated place. Many sailboat owners send their sails back to the sail manufacturer at the end of each season. The sailmaker will check the stitching and sailcloth for wear and store the sails until the start of the next season.

ELECTRICAL

Remove battery from boat (Refer to Engine Manual) and charge. It is a good idea to also remove the electronics (radio, radar, etc) and store in a safe place**.**

CUSHIONS

Cushions should be removed and stored at home if possible. If not, prop them vertically to promote air flow around each cushion. *Dry clean only!*

HATCHES

Tenting the deck during storage will help prevent ice from forming and damaging hatches and deck fittings. The installation of a passive vent will help with ventilation while the boat is in storage.

WATER SYSTEM

Open a faucet and allow the pump to empty the tank. Then add approximately two gallons (7.6L) of non-toxic antifreeze solution to the tank and repeat the pumping out procedure.

A second method is to disconnect the hoses at the pump, allowing them to drain. Find the lowest point in the system and disconnect the fitting. Open all faucets to allow the lines to drain. If possible, use a short section of hose on the faucet to blow through the lines to clear all water. A diluted solution with baking soda will help freshen the system.

WATER SYSTEM

Open valve and drain fully leave valve open during lay-up time.

TOILET AND HOLDING TANK

Drain and flush toilet. Using non toxic antifreeze in a 50/50 mixture with water, pump through toilet and into holding tank.

OUTBOARD ENGINE

Take it home and store it in a safe place. Be very careful storing the gas tank as the gasoline is very flammable. Refer to Engine Manual for specific maintenance schedule.

INBOARD ENGINE

Winterizing Fresh Water Cooled Diesel Engines

1. Drain crankcase and transmission and refill with fresh lubricant as specified in Engine Manual.
2. Drain and clean all fuel filters and change elements, gaskets, and seals. Bleed all air from fuel systems.
3. Start engine and bring up to operating temperature.
4. Close the sea cock, remove the raw water pickup hose from the raw water pump and immerse one end into a 5-gallon (19L) bucket of antifreeze solution. Start engine and run

until antifreeze solution comes out exhaust stack or until bucket is empty. Attach the raw water pickup hose to the raw water pump. Tighten all clamps. **NOTE: This procedure bypasses the sea strainer to prevent antifreeze from crystallizing in sea strainer, which warranty will not cover.**

5. Loosen water pump and alternator belts to lessen tension on belts during winter.

6. For engines equipped with a hand crank: pull compression release levers and turn engine slowly with the hand crank. Slowly pour about 2 ounces of engine oil into the intake pipe or manifold while hand cranking the engine. This will allow for a thin coat of oil on the valves and upper cylinder. **DO NOT USE** starter to turn engine or serious engine damage may result.

7. Tape the openings of the intake and exhaust manifolds with duct tape to help prevent corrosion of the upper cylinder during layup.

8. Scrape all rust or corrosion from exposed metal parts and surfaces. Scrub all metal surfaces with detergent and rinse thoroughly. Paint any bare metal.

9. Place a dust cover over engine. Do not leave the engine exposed to rain and sea breeze.

10. Disconnect the battery cables; remove the battery from the boat. Clean the terminal ends and battery with a solution of baking soda and water, and then rinse thoroughly with clean water. Apply a light coat of grease on the terminal end of the battery and cables. Store the battery in a cool dry place. Use a trickle charger to keep battery charged. Do not charge battery near any open flame or a confined area.

CAUTION: Wear safety goggles and rubber gloves to protect your skin.

Winterizing Raw Water Cooled Diesel Engines

1. Drain crankcase and transmission and refill with fresh oil as specified in the engine manual. Change oil filters.

2. Close seacock, remove raw water pickup hose from water pump, attach 4-foot (1.2m) length of hose to water pump and immerse in a 5 gallon(19L) bucket of anti freeze solution. Remove hose from engine or manifold that leads to exhaust elbow. Attach about a 4-foot length of hose and immerse one end in the bucket of antifreeze solution. Start engine and run until water begins to warm up (about 3-5 min.) and the thermostat opens. Stop engine. Replace hose that leads to exhaust elbow. Star engine and let run till water comes out exhaust pipe. Stop engine, remove hose from water pump to bucket, attach hose from seacock to water pump and tighten all hose clamps. **NOTE: this procedure bypasses the sea strainer to prevent antifreeze from crystallizing sea strainer, which warranty will not cover.**

3. Loosen water pump and alternator to lessen tensions on belts during winter.

4. Drain and clean all fuel filters and change elements, gaskets and seals. Bleed all air from fuel systems.

5.Pull compression release lever and turn engine slowly with hand crank. Slowly pour about 2 ounces of

engine oil into the intake pipe or manifold while engine is turning.
DO NOT USE the starter to turn engine or serious engine damage may result.
6. Tape the openings of the intake and exhaust manifolds with duct tape to help prevent corrosion of the upper cylinder during lay-up.
7. Scrape all rust or corrosion from exposed metal parts and surfaces.
Scrub all metal surfaces with detergent and rinse thoroughly. Paint any bare metal.
8. Place a dust cover over engine. Do not leave engine exposed to rain and sea breeze.
9. Disconnect the battery cables; remove the battery from the boat.
Clean the terminal ends and battery with a solution of baking soda and water and rinse thoroughly with clean water. Apply a light coat of grease on the terminal end of the battery and cables. Store the battery in a cool dry place. Use a trickle charger to keep battery charged. Do not charge battery near any open flame or in a confined area.
CAUTION: Wear safety goggles and rubber gloves to protect your eyes and skin.

DEPARTURE FROM THE BOAT
The check list for leaving a boat unattended is very important because items overlooked often will not be remembered until you are far from the boat and corrective actions are impractical or impossible.
Primary choices for this list are items relating to the safety and security of the unattended craft: turning off fuel valves, properly setting electrical switches, pumping out bilge and leaving the switch on automatic (or arrange for periodic pumping out). **It is recommended that the power be turned off when leaving the boat.** Other departure checklist items are securing ports, windows, hatches and doors.

ROUTINE MAINTENANCE
Routine maintenance checklists should include items based on how much the boat is used (usually in terms of engine hours) and on calendar dates (weekly, monthly or seasonal checks). Typical of the former are oil level checks and changes, and oil and fuel filter changes.
On a calendar basis the lists should note such matters as electrolyte levels in storage batteries, pressure gauges on dry chemical fire extinguishers, and all navigation lights. Check the operation of automatic bilge alarms or pump switches by running water into the boat. Periodically close and open
sea cocks several times to ensure their free and easy operation in case they are needed in an emergency. Equipment and supplies carried on board for emergencies should be inspected for any signs of deterioration.

CE CERTIFIED

Your Hunter has been manufactured in the United States and has been certified by the IMCI to be in compliance with the relevant parts of the Recreational Craft Directive 94/25/EC from the European Parliament. The CE mark means your craft means your craft meets or exceeds all current International Organization for Standardization (ISO) standards and directives in effect at time of manufacture. The builder's plate, affixed to your boat, describes various parameters involved in the design of your boat. Please refer to it regularly when operating your boat.

Following are the Design Categories, established by the Recreation Craft Directive, which is to be considered a guideline of use application as per the Directive's criteria. Hunter Marine Corporation does NOT establish these criteria, and the category indicated is only a reference to the assigned category. The safety of the captain and crew of any vessel is not measurable by such categories, and you should not interpret these categories as an indication of your safety in such condition. The skill of your captain and crew, together with proper preparation, appropriate safety equipment for the given conditions and a well maintained vessel are critical to safe sailing.

CE CRAFT DESIGN CATEGORIES

Category A – "Ocean": Craft designed for extended voyages where conditions may exceed wind force 8 (Beaufort Scale) and include significant wave heights of 4m, for vessels that are largely self-sufficient.

Category B - "Offshore": Craft designed for offshore voyages where conditions include winds up to and including wind force 8 and significant wave heights up to and including 4m may be experienced.

Category C – "Inshore": Craft designed for voyages in coastal waters, large bays, estuaries, lakes and rivers, where conditions up to and including wind force 6 and significant wave heights up to and including 4m may be experienced.

Category D – "Sheltered Waves": Craft designed for voyages on small lakes, rivers and canals, where conditions up to and including wind force 4 and significant wave heights up to and including 0.5m may be experienced.

For additional information, contact

International Marine Certification Institute (IMCI)
Treves Centre, rue de Treves 45
1040 Brussels, Belgium
FX: (32) 2238-7700

NMMA CERTIFIED

Your Hunter has been judged by the National Marine Manufacturers Association (NMMA) to be in compliance with the applicable federal regulations and American Boat and Yacht Council (ABYC) standard and recommended practices in effect at the time of manufacture.

For additional information, contact:

National Marine Manufacturers Association
200 E. Randolph Dr., Suite 5100
Chicago, IL 60611
PH: (1) 312-946-6200 FX: (1) 312-946-0388

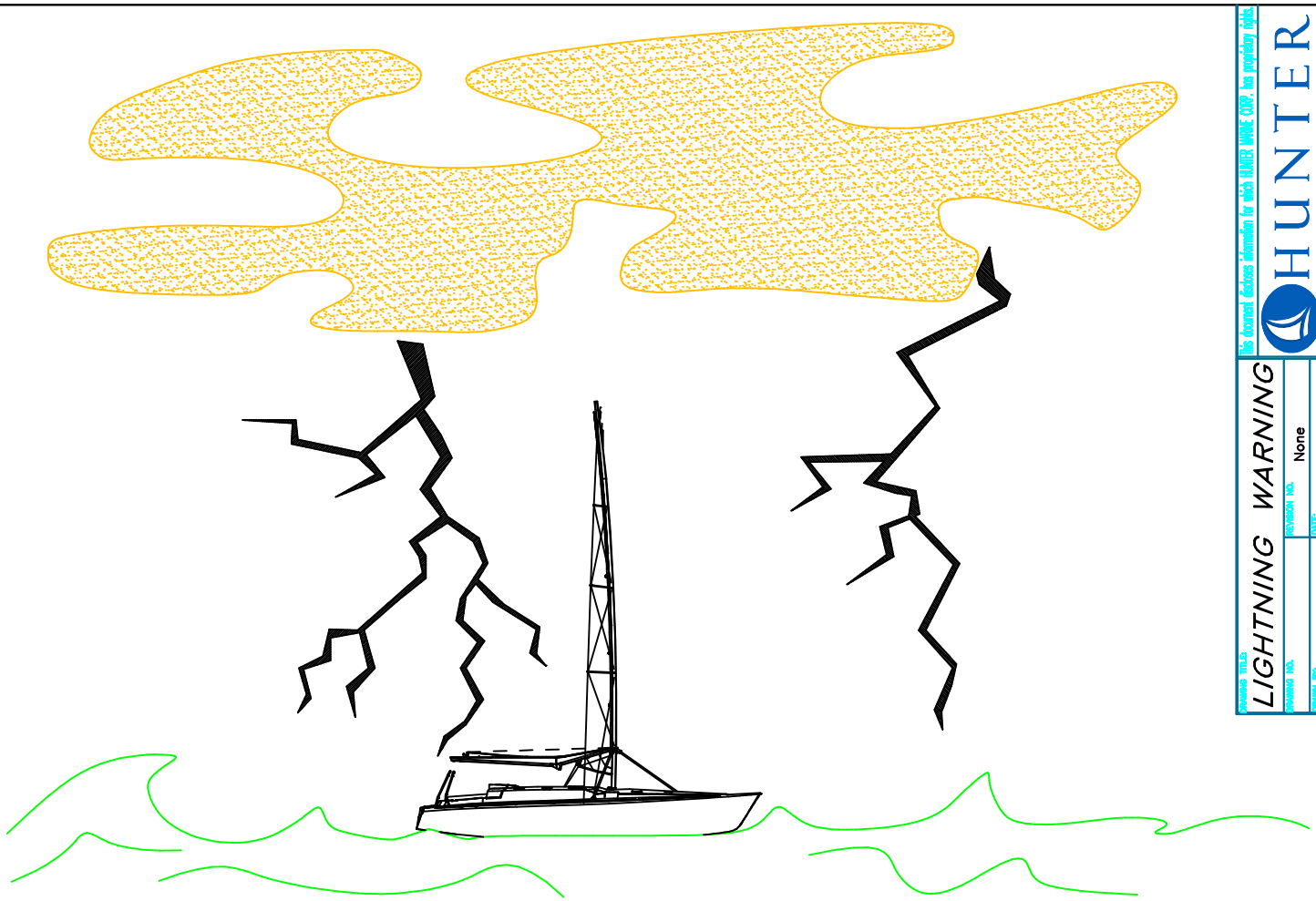

DRAWING TITLE: LIGHTNING WARNING
DRAWING NO.
REVISION NO. None
DRAWN BY: ENG
DATE: 07/11/02

this document discloses information for which HUNTER MARINE CORP. has proprietary rights.

HUNTER

LIGHTNING STORM WARNING:

1. ALL WHIP ANTENNAS SHOULD BE TIED DURING STORM, UNLESS PART OF THE LIGHTNING PROTECTION SYSTEM.

2. PRECAUTIONS: DURING LIGHTNING STORMS: A. THE SHIPS OCCUPANTS SHOULD TAKE SHELTER INSIDE A CLOSED AREA OF THE BOAT. EXAMPLE: BELOW DECK. B. OCCUPANTS SHOULD NOT HAVE ANY BODY PARTS IN THE WATER. C. AVOID CONTACT WITH ANY COMPONENTS OF THE L.P.S. AND D. AVOID ALL CONTACT WITH ANY METAL OBJECTS.

3. SEE DIAGRAM BELOW FOR INFORMATION ON THE LIGHTNING PROTECTION ZONE.

4. IF LIGHTNING SHOULD STRIKE THE SHIP, INSPECT ALL ELECTRONICS, ELECTRIC GEAR, COMPASS AND L.P.S. SYSTEM FOR POSSIBLE DAMAGE. RECALIBRATE AS NECESSARY. NOTE: BEGIN CHECKING ELECTRONICS AFTER THE THREAT OF LIGHTNING HAS PASSED.

FAILURE TO FOLLOW PRECAUTIONS MAY RESULT IN SEVERE INJURY OR DEATH

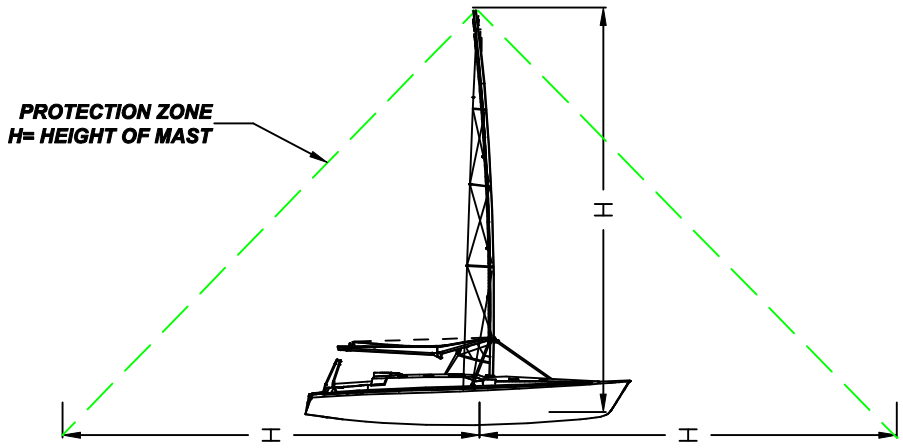

H426 STANDARD SAILPLAN

E	20'-09"	6.32 m
P	46'-06"	14.17 m
I	47'-11"	14.59 m
J	14'-08"	4.47m

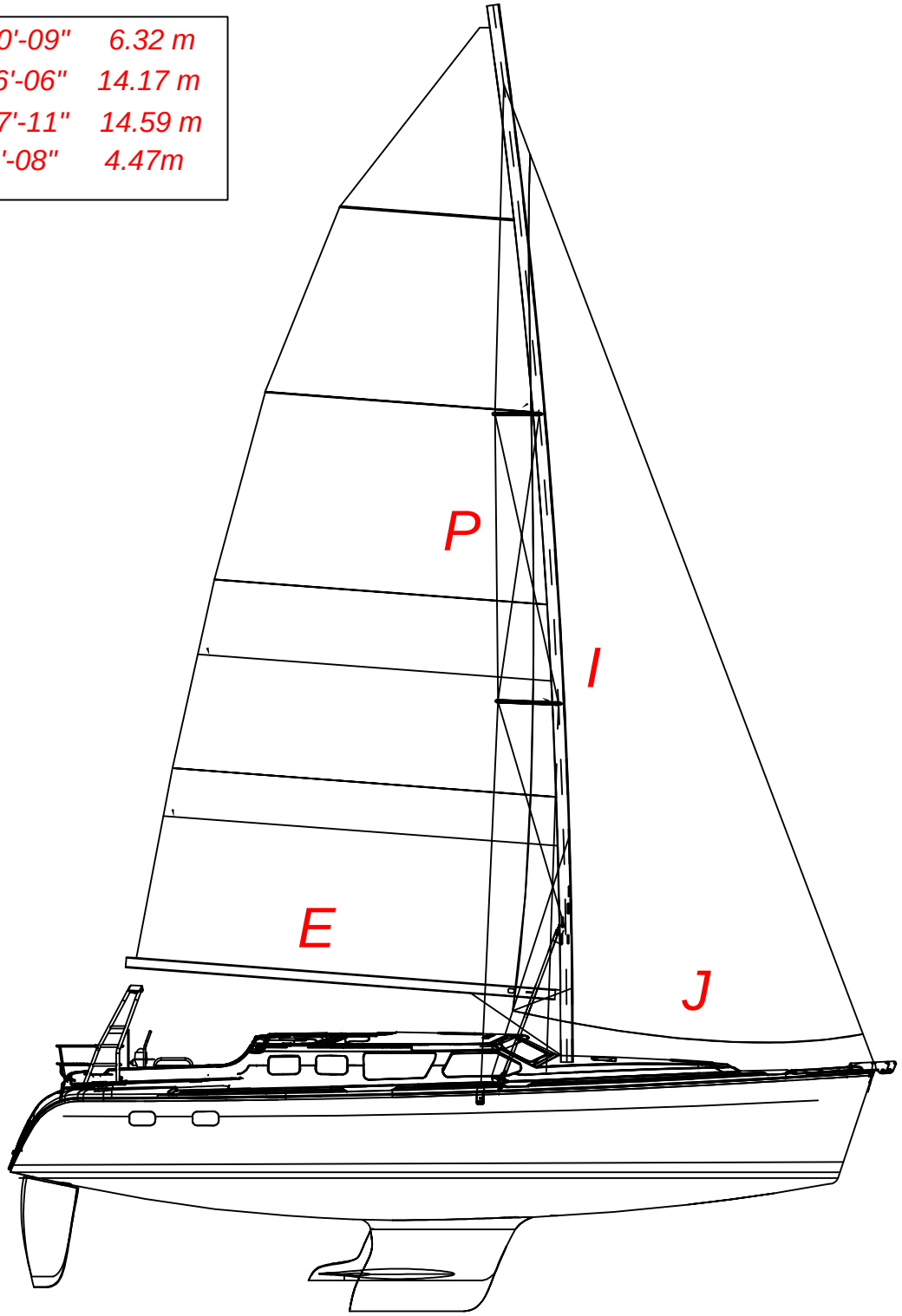

This document discloses information for which HUNTER MARINE CORP. has proprietary rights.

HUNTER

DRAWING TITLE: SAILPLAN (STANDARD)

DRAWING NO. 4268036A | REVISION NO. None

DRAWN BY: ENG | DATE: 07/11/02

H426 FURLING SAILPLAN

E	20'-10"	6.35 m
P	50'-00"	15.24 m
I	47'-11"	14.59 m
J	14'-08"	4.47m

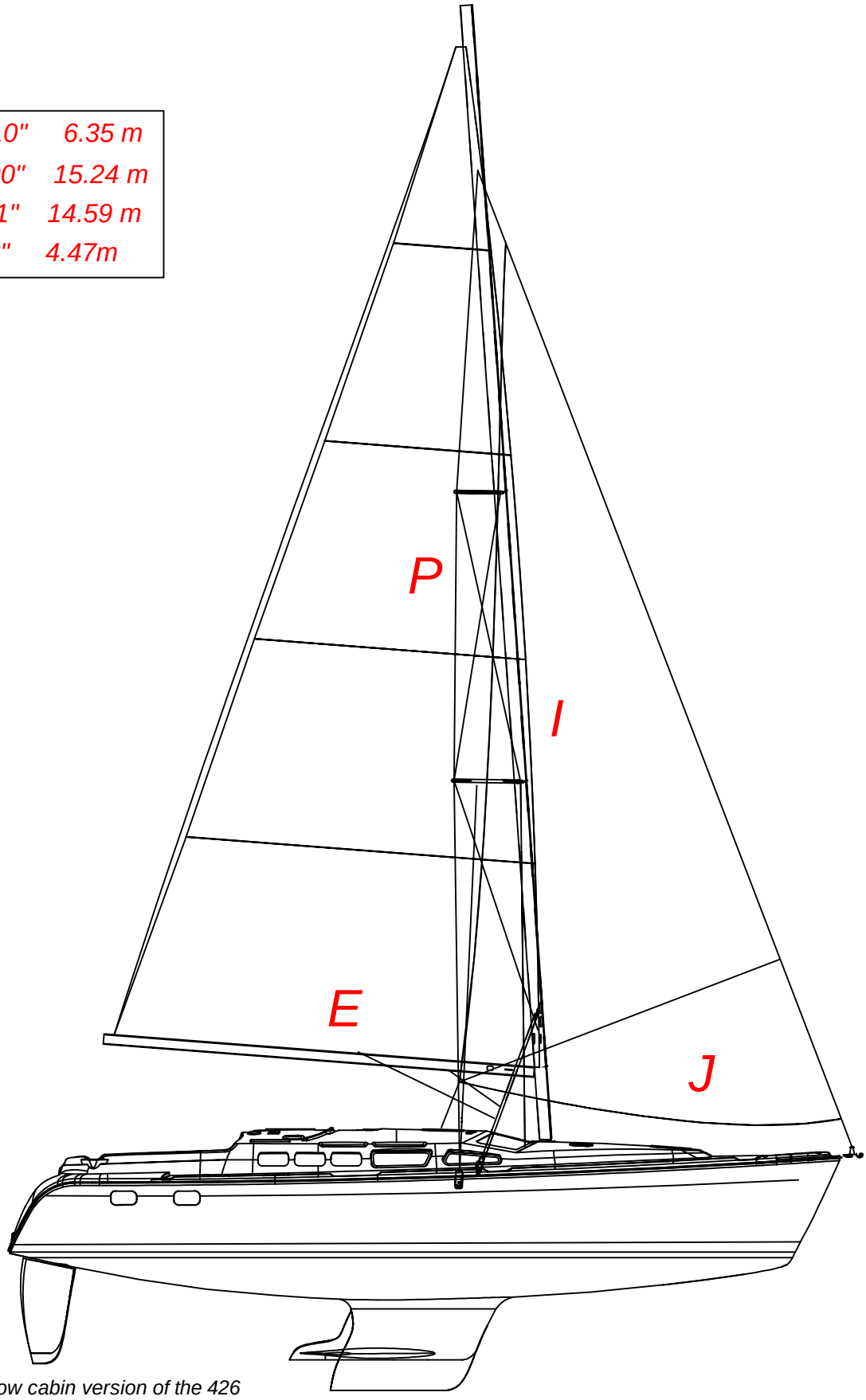

illustrated is the low cabin version of the 426

This document discloses information for which HUNTER MARINE CORP. has proprietary rights.

HUNTER

DRAWING TITLE: SAILPLAN (FURLING)

DRAWING NO. 4268036B

REVISION NO. None

DRAWN BY: ENG

DATE: 07/11/02

H426 DIMENSIONS, CAPACITIES, ETC.

HULL LENGTH	**41" 10"**	**12.83 m.**
LENGTH OVERALL (INCUDES BOW ROLLER)	**43' 2 1/2"**	**13.17 m.**
LENGTH OF WATERLINE (LWL)	**39' 02"**	**11.94 m.**
BEAM (MAX)(with rubrail)	**14' 06"**	**4.42 m.**
DRAFT		
*** SHOAL**	**5' 00"**	**1.52 m.**
*** DEEP**	**6' 06"**	**1.98 m.**
DISPLACEMENT	**22,936 lbs.**	**10404kg.**
BALLAST (LEAD KEEL)		
*** SHOAL**	**7389 lbs.**	**3352 kg.**
*** DEEP**	**7237 lbs.**	**3283 kg.**
MAST HEIGHT (FROM WATERLINE)		
*** STANDARD**	**57' 4"**	**17.48 m.**
*** FURLING**	**62' 3"**	**18.70 m.**
SAIL AREA (ACTUAL)		
*** STANDARD**	**962 sq. ft.**	**89 sq. m.**
*** FURLING**	**883 sq. ft.**	**82 sq. m.**
SA/DISP	**19.06/standard actual**	**17.05/furling actual**
DISPLACEMENT LENGTH	**ratio 169.3**	
I	**47' 11"**	**14.6 m.**
J	**14' 08"**	**4.47 m.**
P		
*** STANDARD**	**46' 06"**	**14.17 m.**
*** FURLING**	**50' 00"**	**15.24 m.**
E		
*** STANDARD**	**20' 09"**	**6.32 m.**
*** FURLING**	**20' 10"**	**6.35 m.**
BERTHS		
*** STANDARD CABIN**	**Sleeps 7**	**Sleeps 7**
*** TRI-CABIN**	**Sleeps 9**	**Sleeps 9**
HEADROOM		
*** STANDARD DECK**	**6' 6"**	**1.98 m.**
*** DECK SALOON**	**7' 0"**	**2.13 m.**
FUEL TANK CAPACITY	**51 US gal.**	**193 liters**
WATER CAPACITY	**125 US gal.**	**473 liters**
WATER HEATER	**11 US gal.**	**42 liters**
HOLDING TANK CAPACITY	**45 US gal.**	**170 liters**
LPG TANK CAPACITY(SPARE OPT.)	**2 x 10 lbs.**	**2 x 4.5 kg.**
BATTERY CAPACITY	**470 amps**	**470 amps**
INBOARD ENGINE	**56 hp.**	**41.76 kw.**
LIFTING POINTS	**INDICATED BY "SLING" LABELS ON HULL**	

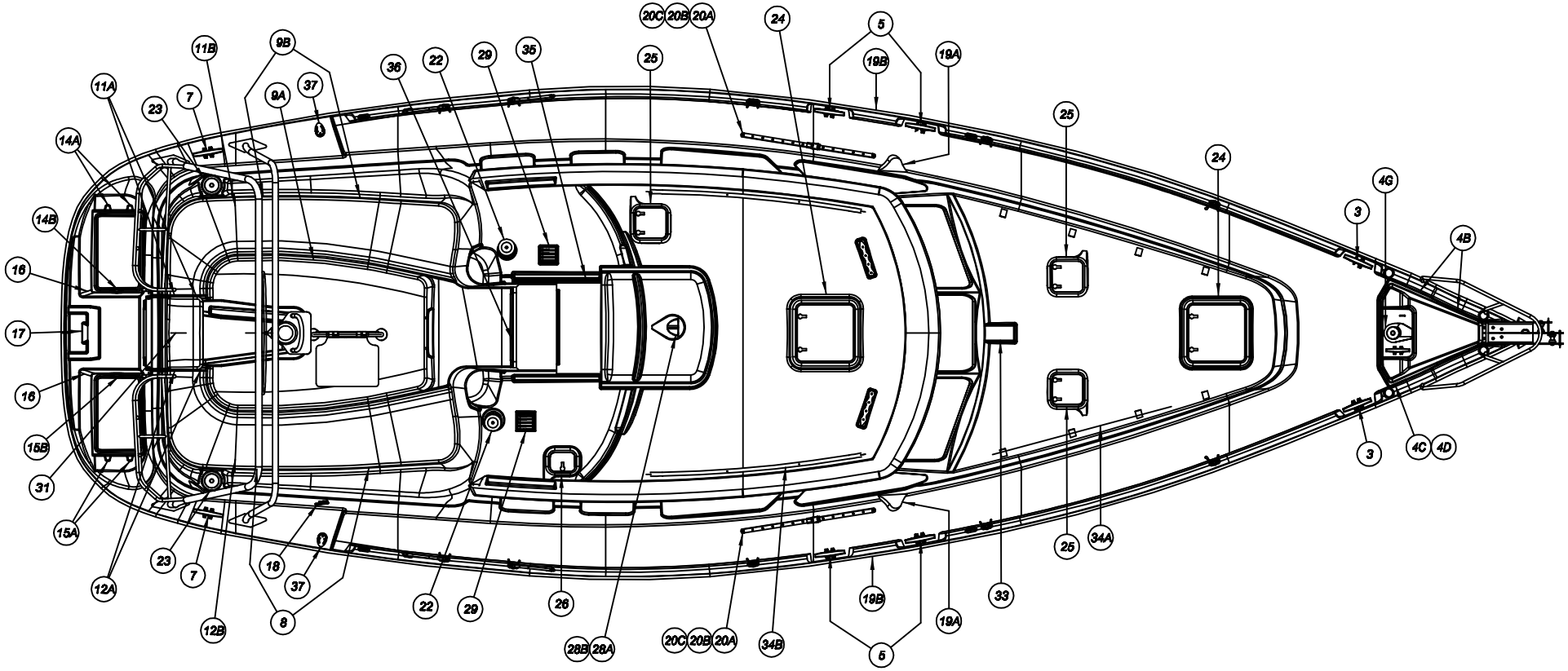

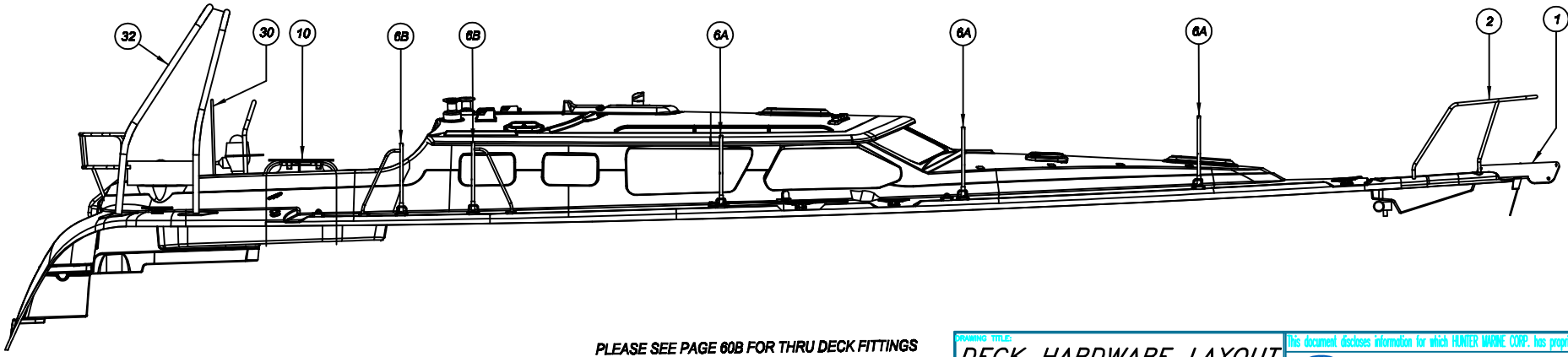

PLEASE SEE PAGE 60B FOR THRU DECK FITTINGS

DRAWING TITLE: DECK HARDWARE LAYOUT

DRAWING NO.	REVISION NO.
42680	None
DRAWN BY:	DATE:
ENG	07/11/02

This document discloses information for which HUNTER MARINE CORP. has proprietary rights.

HUNTER

H426 DECK HARDWARE LIST

ITEM	QTY.	U.O.M.	PART NUMBER	DESCRIPTION
1	1	EA.		ANCHOR ROLLER
2	1	EA.		BOW RAIL
3	2	EA.		FWD. DECK MOORING CLEAT
4A	1	EA.		ANCHORWELL LID(NOT SHOWN)
4B	2	EA.		HINGES
4C	1	EA.		ANCHOR WELL STRIKER PLATE
4D	1	EA.		ANCHORWELL HANDLE
4E	1	EA.		ANCHOR CLEAT
4F	1	EA.		ANCHORWELL U-BOLT W/NUTS
4G	1	EA.		ANCHOR WINDLASS
4H	1	EA.		ANCHOR CHAFE GUARD
5	2	EA.		MID-SHIP SPRING MOORING CLEAT
6A	4	EA.		STANCHION W/BASE #3
6B	2	EA.		GATE STANCHION W/BASE #3
7	2	EA.		AFT MOORING CLEATS
8A	2	EA.		HINGES
8B	1	EA.		PUSH BUTTON LATCH
9	2	EA.		HINGES
10	1	EA.		COCKPIT TABLE
11A	2	EA.		HINGES
11B	1	EA.		ANCHOR CHAFE GUARD
12A	2	EA.		HINGES
12B	1	EA.		ANCHOR CHAFE GUARD
13	2	EA.		STERN RAILS W/ SEATS
14A	2	EA.		HINGES
14B	1	EA.		PUSH BUTTON LATCH
15A	2	EA.		HINGES
15B	1	EA.		PUSH BUTTON LATCH
16	2	EA.		SWIM PLATFORM HANDRAIL
17	1	EA.		SWIM LADDER
18	1	EA.		5" CLEATS
19A	2	EA.		VERTICAL CHAINPLATES
19B	2	EA.		LOWER CHAINPLATES
20A	2	EA.		TRACK END STOPS
20B	2	EA.		LEAD BLOCKS
20C	2	EA.		GENOA TRACK
21	2	EA.		QUAD ORGANIZER
22	2	EA.		WINCH 46 CST
23	2	EA.		WINCH 40 CST
24	1	EA.		HATCH SIZE 60
25	1	EA.		HATCH SIZE10
26	4	EA.		HATCH SIZE 3
27	1	EA.		HATCH SIZE 30
28A	1	EA.		DORADE, DECK PLATE
28B	1	EA.		VENT, DORADE
29	2	EA.		SHEETSTOPS XA4
30	1	EA.		STEERING SYSTEM
31	1	EA.		EMERGENCY TILLER ACCESS COVER
32	1	EA.		ARCH
33	1	EA.		MAST STEP BASE PLATE
34A	1	EA.		FWD DECK HANDRAIL
34B	1	EA.		UPPER DECK HANDRAIL
35	1	EA.		COMPANIONAY SLIDER
36	1	EA.		COMPANIONWAY DOOR
37	1	EA.		JIB SHEET TURNING BLOCKS

H426

Interior layout

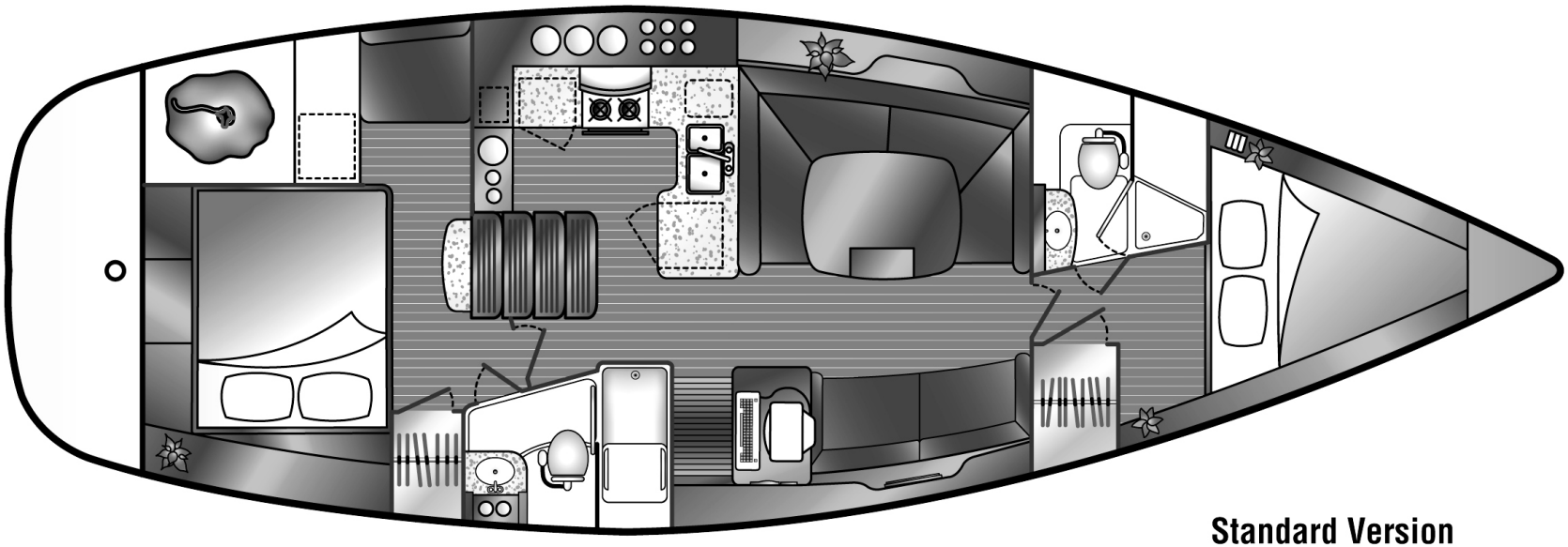

Standard Version

H426

Interior layout

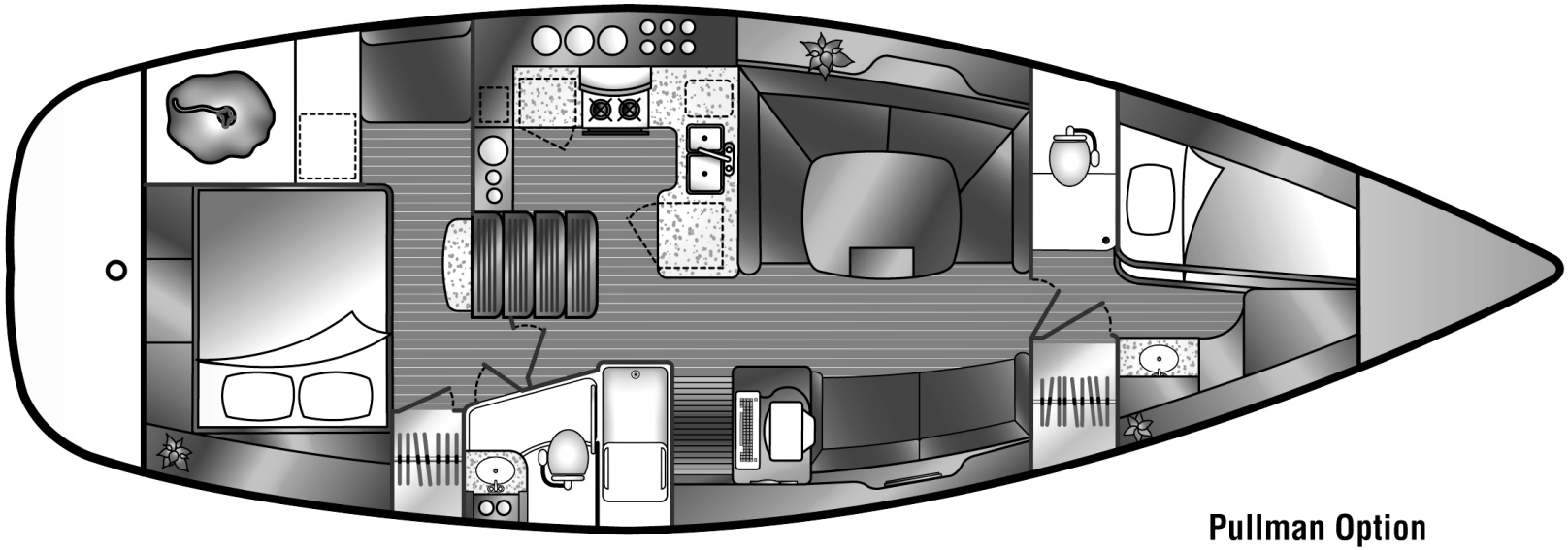

Pullman Option

H426

Interior layout

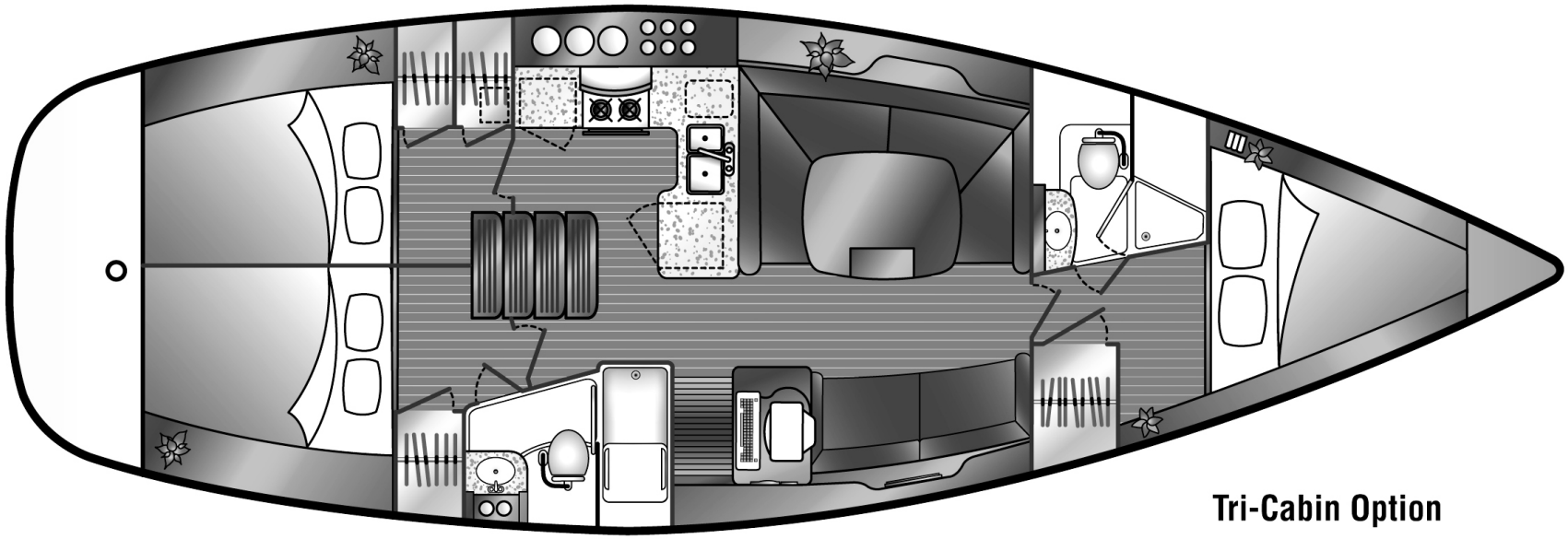

Tri-Cabin Option

H426

DINETTE TABLE OPERATION

1. Dinette table in the "up" position.

2. Loosen knobs on pedestal base

3. Push down on table top to lower.

4. Dinette table in the "down" position.

5. Pull up on table to raise and tighten knobs on pedestal.

6. Unfasten clips on under side of table.

7. Pull table apart and remove table leaf.

8. Push table together and refasten clips.

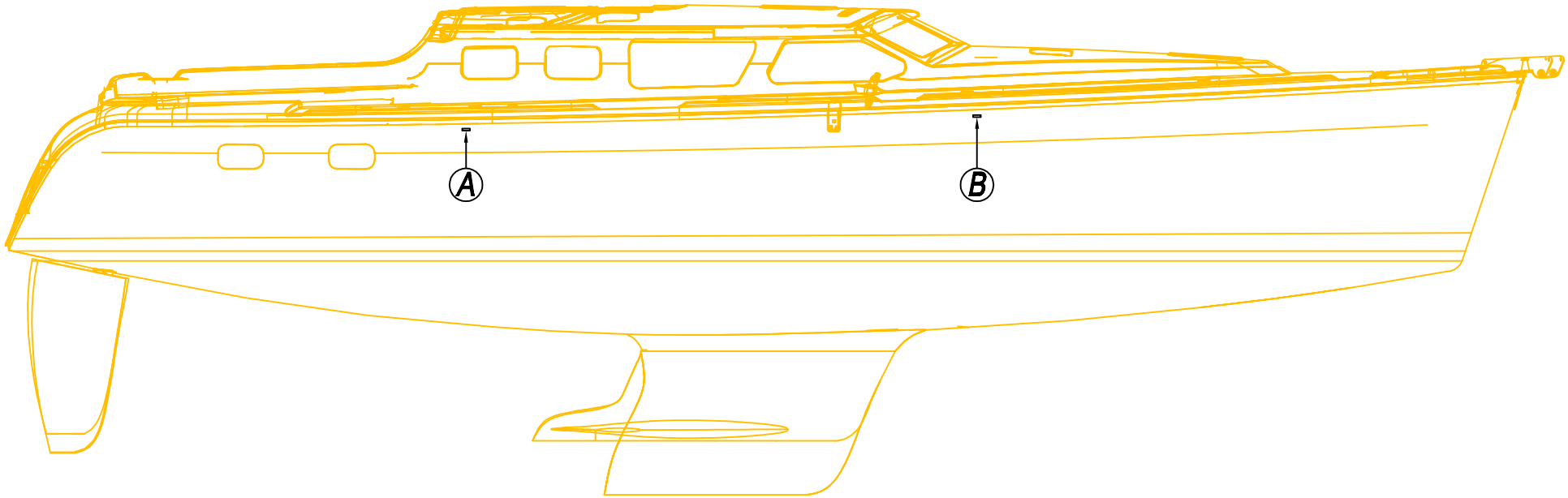

A AFT LIFTING POINT (INDICATED BY DECAL) PLACEMENT IS FOWARD OF THE HULL WINDOWS SO AS TO ALIGN WITH INTERIOR STRUCTURAL SUPPORT PROVIDED BY BULKHEADS. ALSO BE SURE YOU ARE WELL FORWARD OF PROP SHAFT.

B FWD LIFTING POINT (INDICATED BY DECAL) PLACEMENT IS FWD OF CHAINPLATE SO AS TO ALIGN WITH INTERIOR STRUCTURAL SUPPORT PROVIDED BY FWD SALON BULKHEAD.

NOTE: TO AVOID DAMAGING THE RUBRAIL WHEN LIFTING THE BOAT, A 14" PIECE OF 4" X 4" WOOD SHOULD BE PLACED IN BETWEEN THE LIFTING STRAP AND THE HULL, JUST BELOW THE RUBRAIL

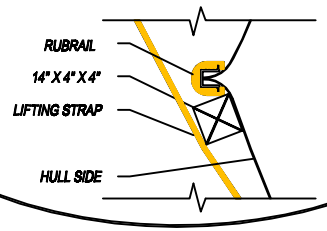

PAGE 41B

DRAWING TITLE: LIFTING POINTS LOCATION

DRAWING NO. 4268041B | REVISION NO. None

DRAWN BY: ENG | DATE: 07/11/02

This document discloses information for which HUNTER MARINE CORP. has proprietary rights.

HUNTER

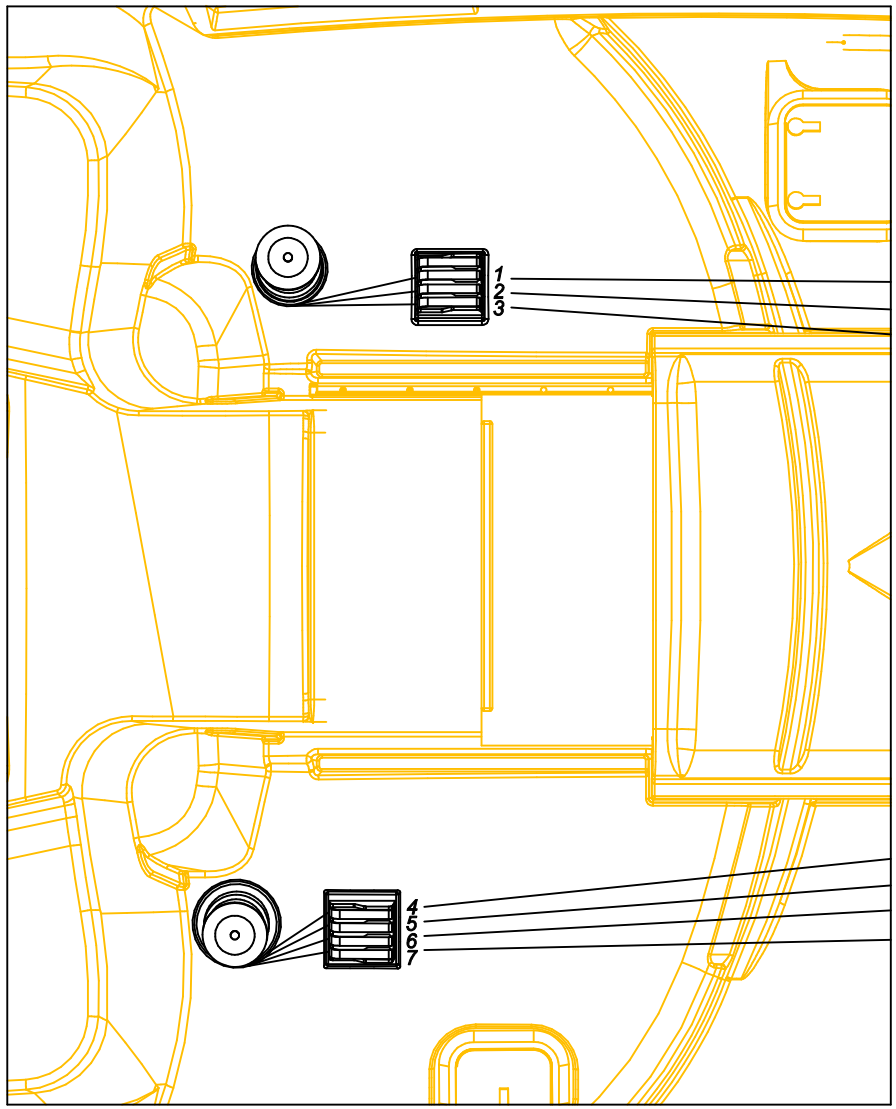

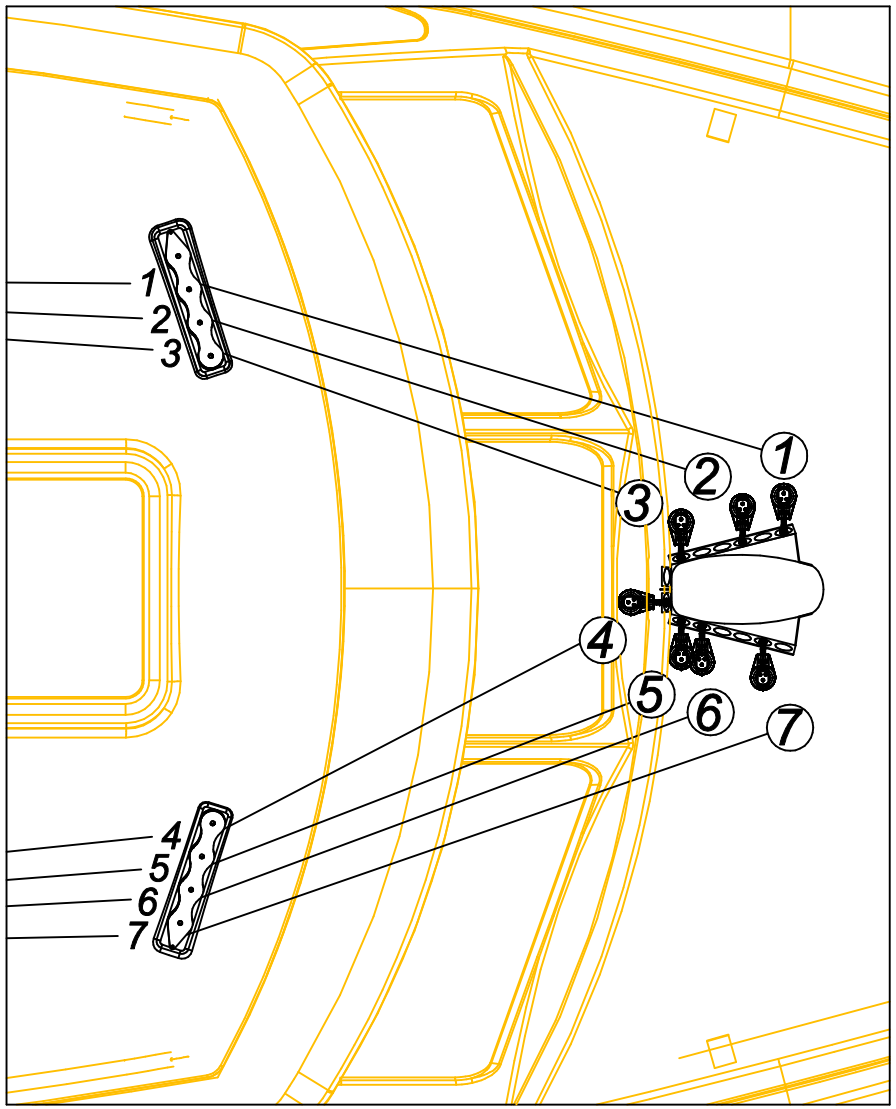

1 OPT SPINNAKER HALYARD
2 JIB HALYARD
3 #2 REEF
4 VANG LINE
5 #1 REEF
6 MAINSHEET
7 MAIN HALYARD

PAGE 42A-1

DRAWING TITLE: STANDARD RUNNING RIGGING	This document discloses information for which HUNTER MARINE CORP. has proprietary rights.
DRAWING NO. 4268042A-1	REVISION NO. None
DRAWN BY: ENG	DATE: 07/11/02

HUNTER

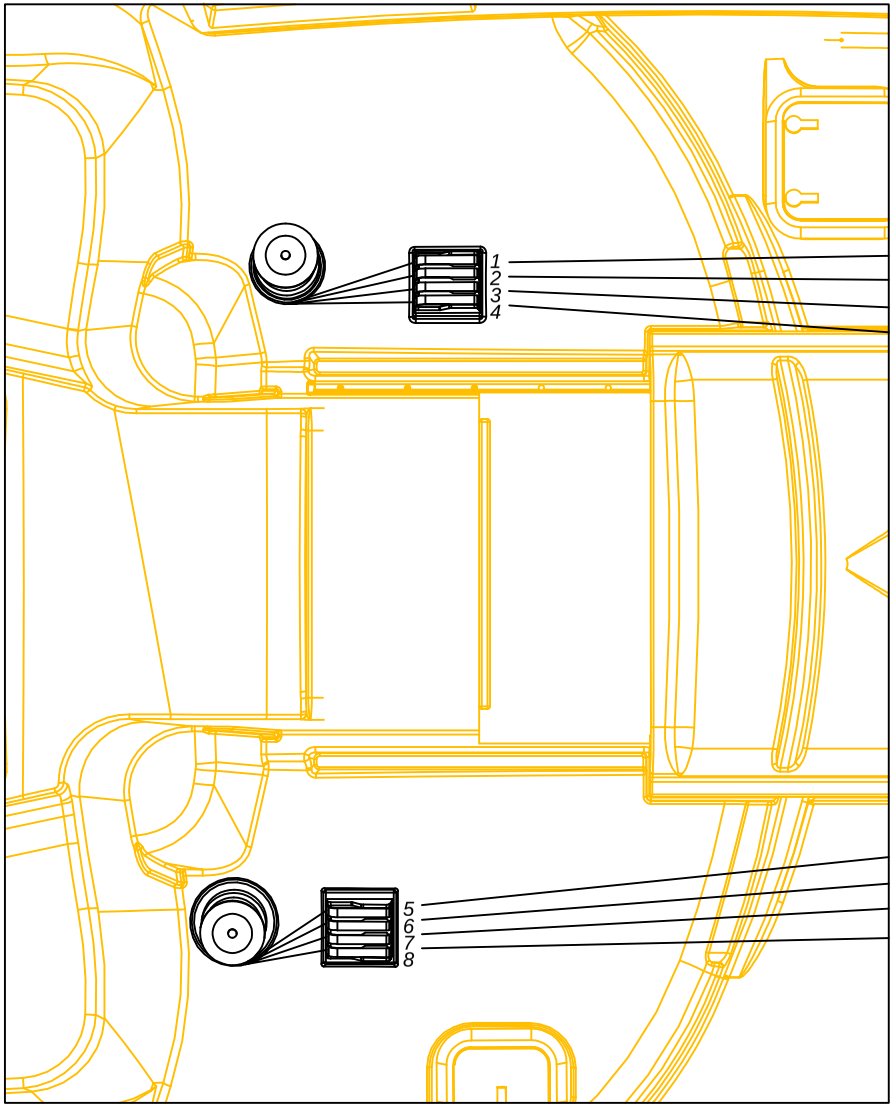

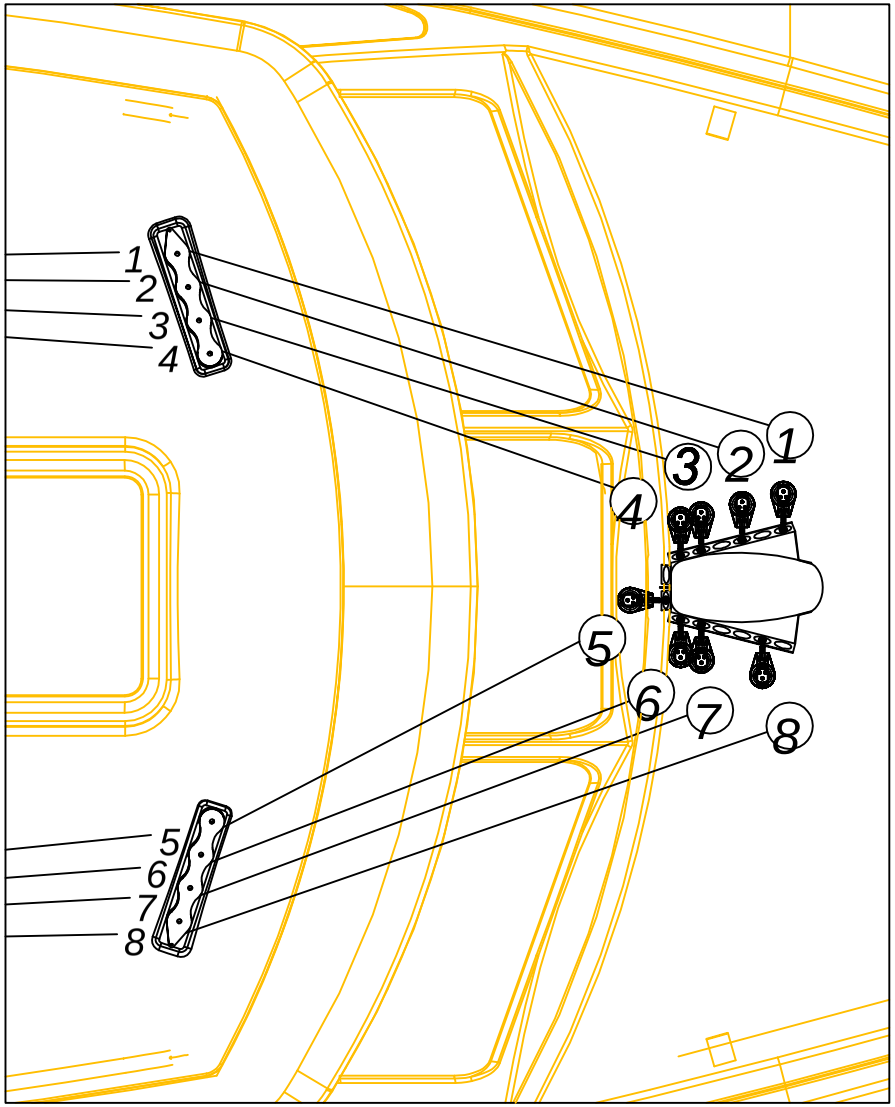

1 OPT SPINNAKER HALYARD
2 JIB HALYARD
3 FURLING LINE
4 FURLING LINE
5 VANG LINE
6 OUTHAUL
7 MAINSHEET
8 MAIN HALYARD

DRAWING TITLE: FURLING RUNNING RIGGING
DRAWING NO. 4268042A–2
REVISION NO. None
DRAWN BY: ENG
DATE: 07/11/02

This document discloses information for which HUNTER MARINE CORP. has proprietary rights.

HUNTER

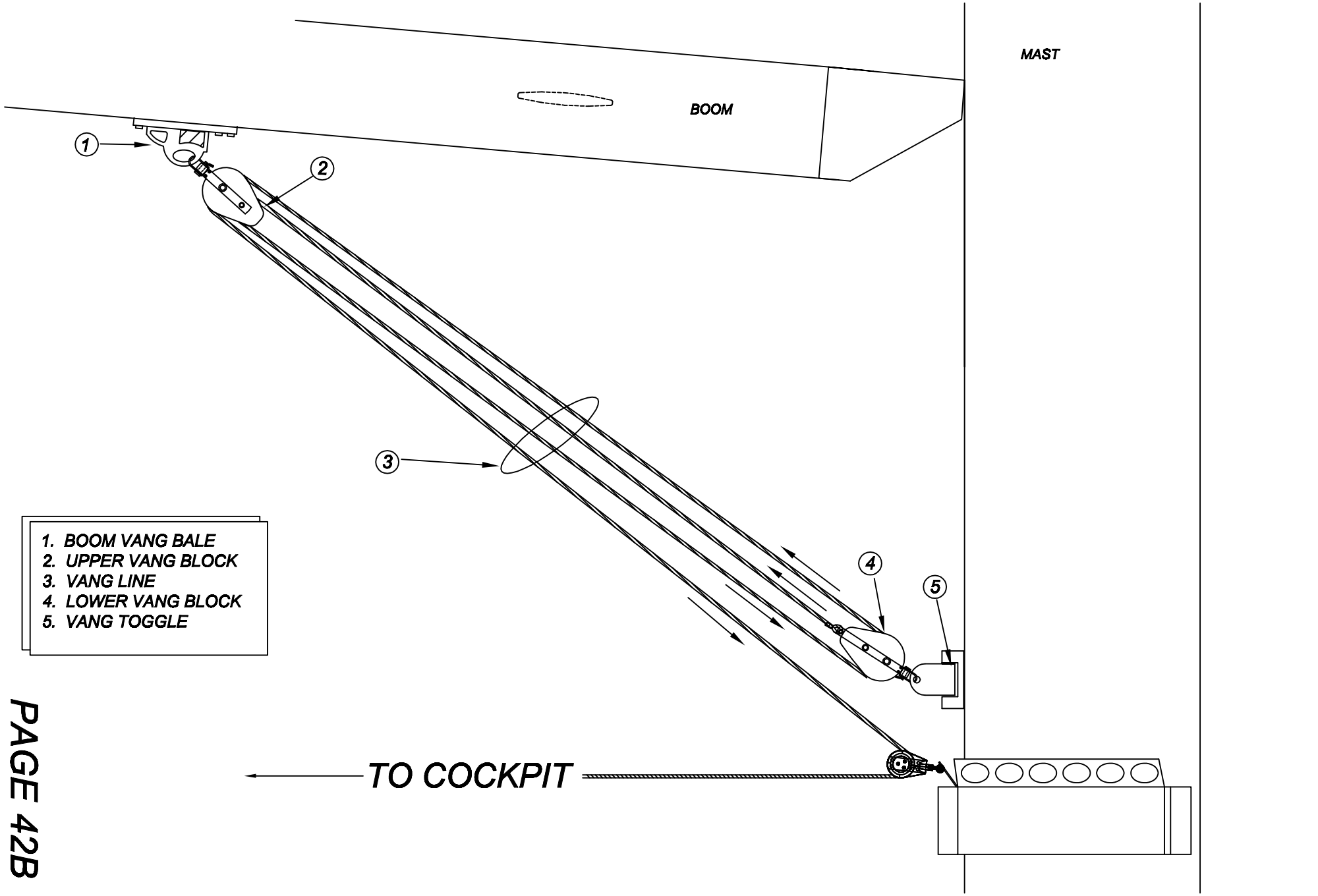

1. BOOM VANG BALE
2. UPPER VANG BLOCK
3. VANG LINE
4. LOWER VANG BLOCK
5. VANG TOGGLE

PAGE 42B

DRAWING TITLE: ROPE VANG DETAILS (STANDARD)	
DRAWING NO.: 4268042B	REVISION NO.: NONE
DRAWN BY: ENG	DATE: 8/15/02

This document discloses information for which HUNTER MARINE CORP. has proprietary rights.

HUNTER

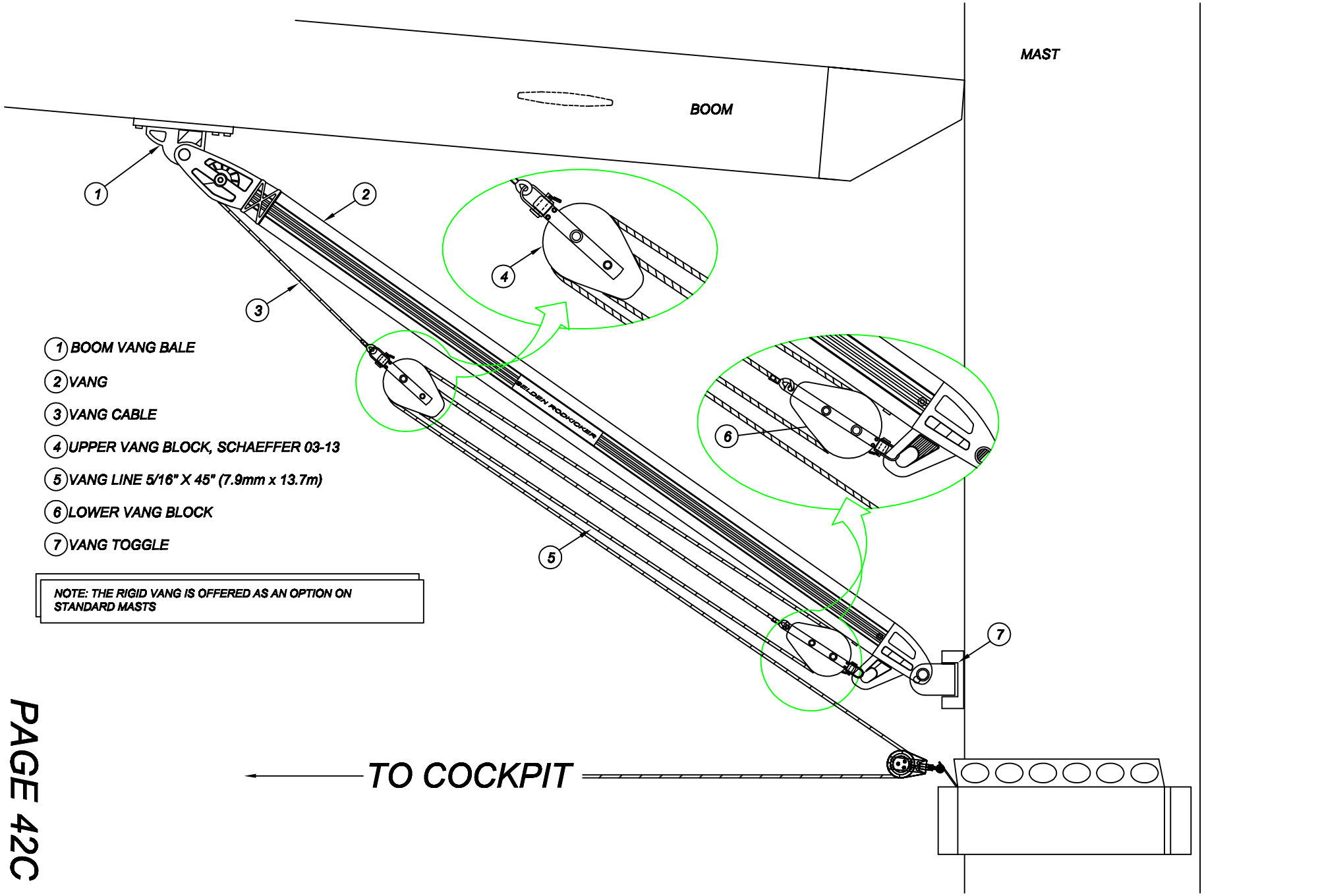

1. BOOM VANG BALE
2. VANG
3. VANG CABLE
4. UPPER VANG BLOCK, SCHAEFFER 03-13
5. VANG LINE 5/16" X 45" (7.9mm x 13.7m)
6. LOWER VANG BLOCK
7. VANG TOGGLE

NOTE: THE RIGID VANG IS OFFERED AS AN OPTION ON STANDARD MASTS

PAGE 42C

DRAWING TITLE: RIGID VANG (FURLING OPTION)

DRAWING NO. 4268042C | REVISION NO. NONE

DRAWN BY: ENG | DATE:

This document discloses information for which HUNTER MARINE CORP. has proprietary rights.

HUNTER

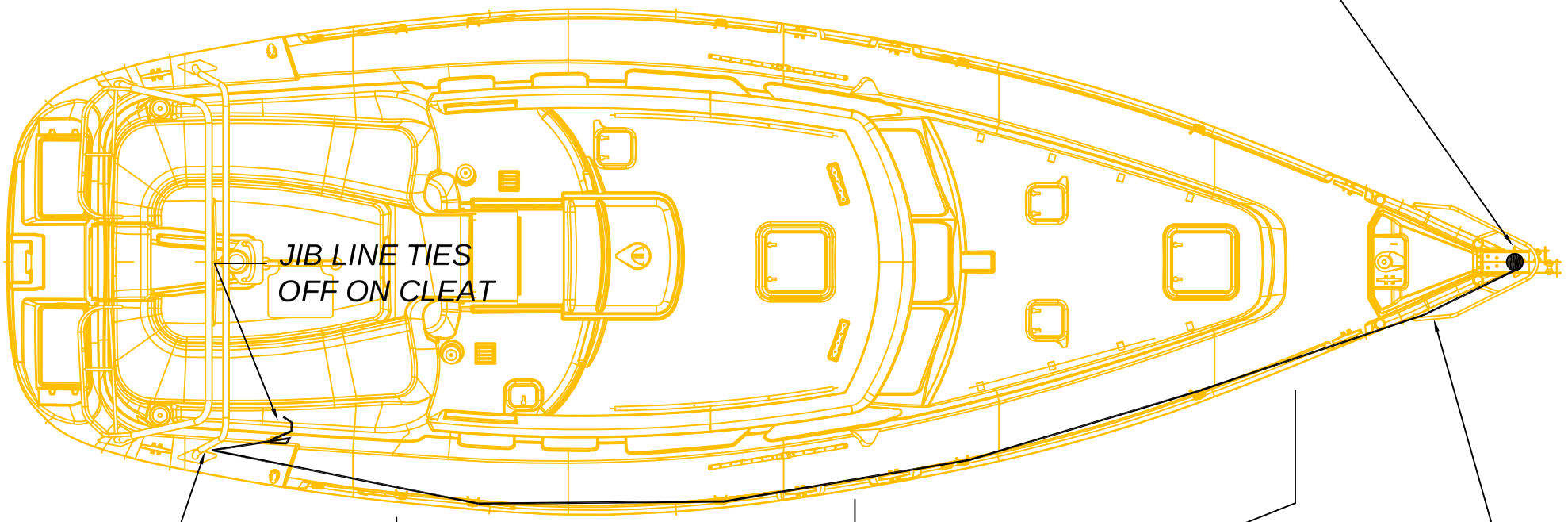

PAGE 42D

DRAWING TITLE: JIB FURLING LINES LAYOUT	
DRAWING NO. 4268042D	REVISION NO. None
DRAWN BY: ENG	DATE: 07/11/02

This document discloses information for which HUNTER MARINE CORP. has proprietary rights.

HUNTER

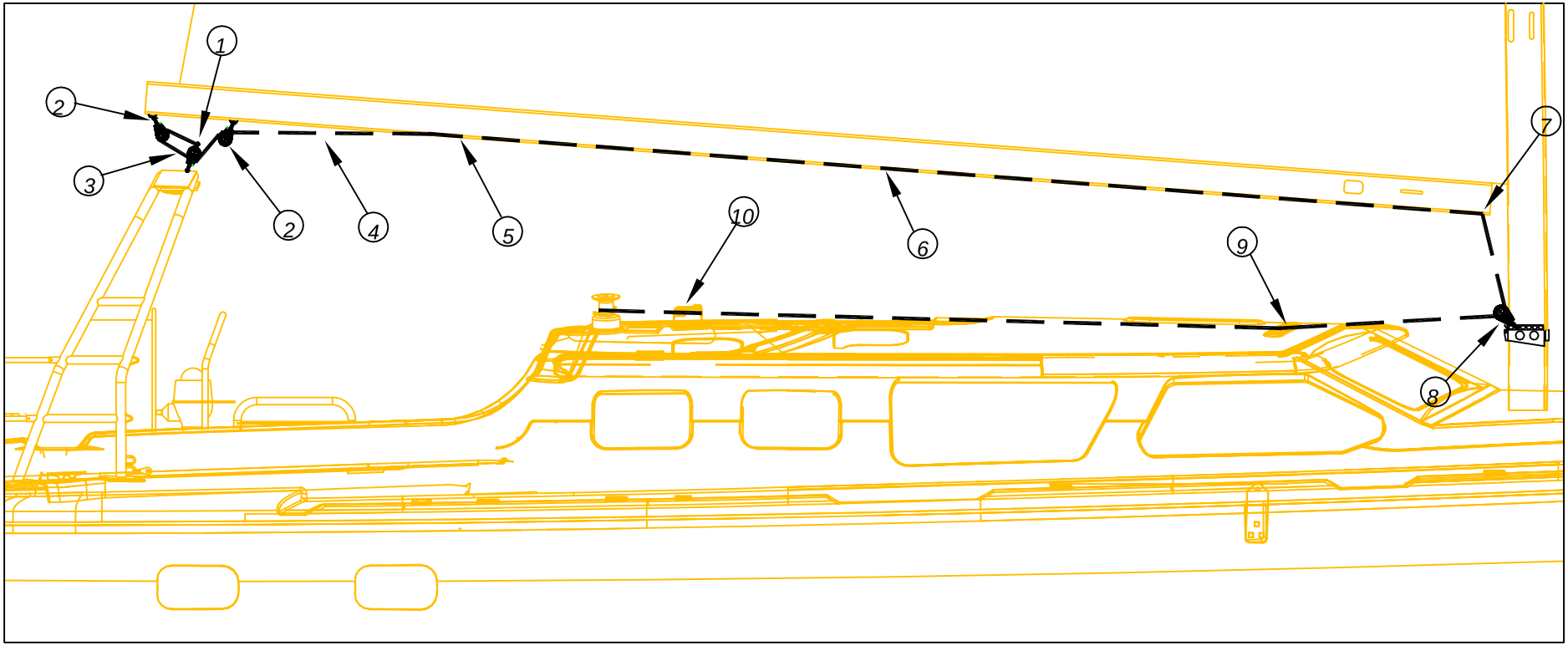

1 ARCH BALE (MAINSHEET PURCHASE END TIE OFF)
2 BOOM BALE AND MAINSHEET BLOCK
3 ARCH MAINSHEET BRIDLE
4 MAINSHEET
5 MAINSHEET BOOM EXIT
6 MAINSHEET RUN INSIDE BOOM
7 MAINSHEET SHEAVE INSIDE FWD BOOM END
8 MAINSHEET BLOCK AT MAST STEP
9 MAINSHEET THRU BLOCK DEFLECTORS
10 MAINSHEET THROUGH BLOCK ORGANIZERS
TO WINCH

SEE FOLLOWING PAGES FOR DETAILS OF STANDARD BRIDLE AND OPTIONAL TRAVELER CONFIGURATIONS

DRAWING TITLE: MAINSHEET PURCHASE LAYOUT
DRAWING NO. 4268043A
REVISION NO. None
DRAWN BY: ENG
DATE: 07/11/02

This document discloses information for which HUNTER MARINE CORP. has proprietary rights.

HUNTER

MAINSHEET PURCHASE ON BOOM

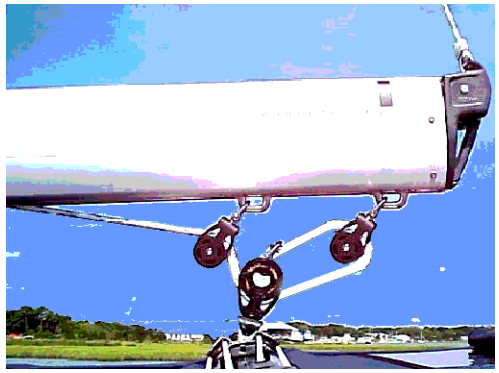

CONTROL LINE RUN SCHEMATIC
VIEW LOOKING DOWN ONTO TRAVELER

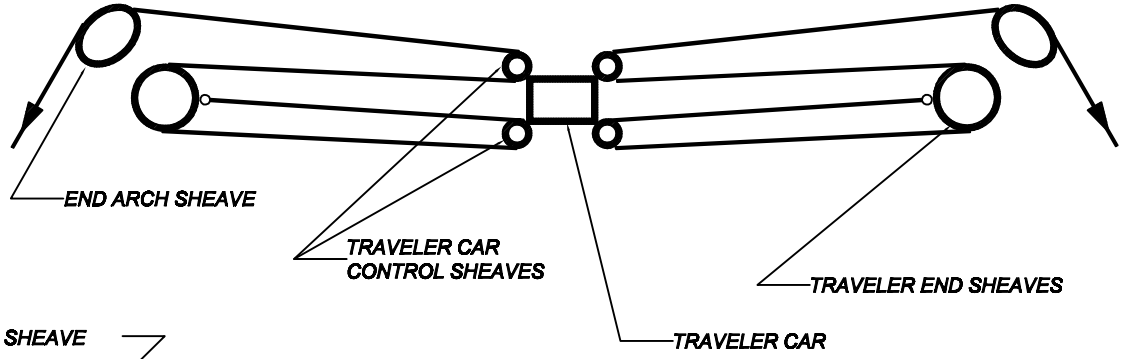

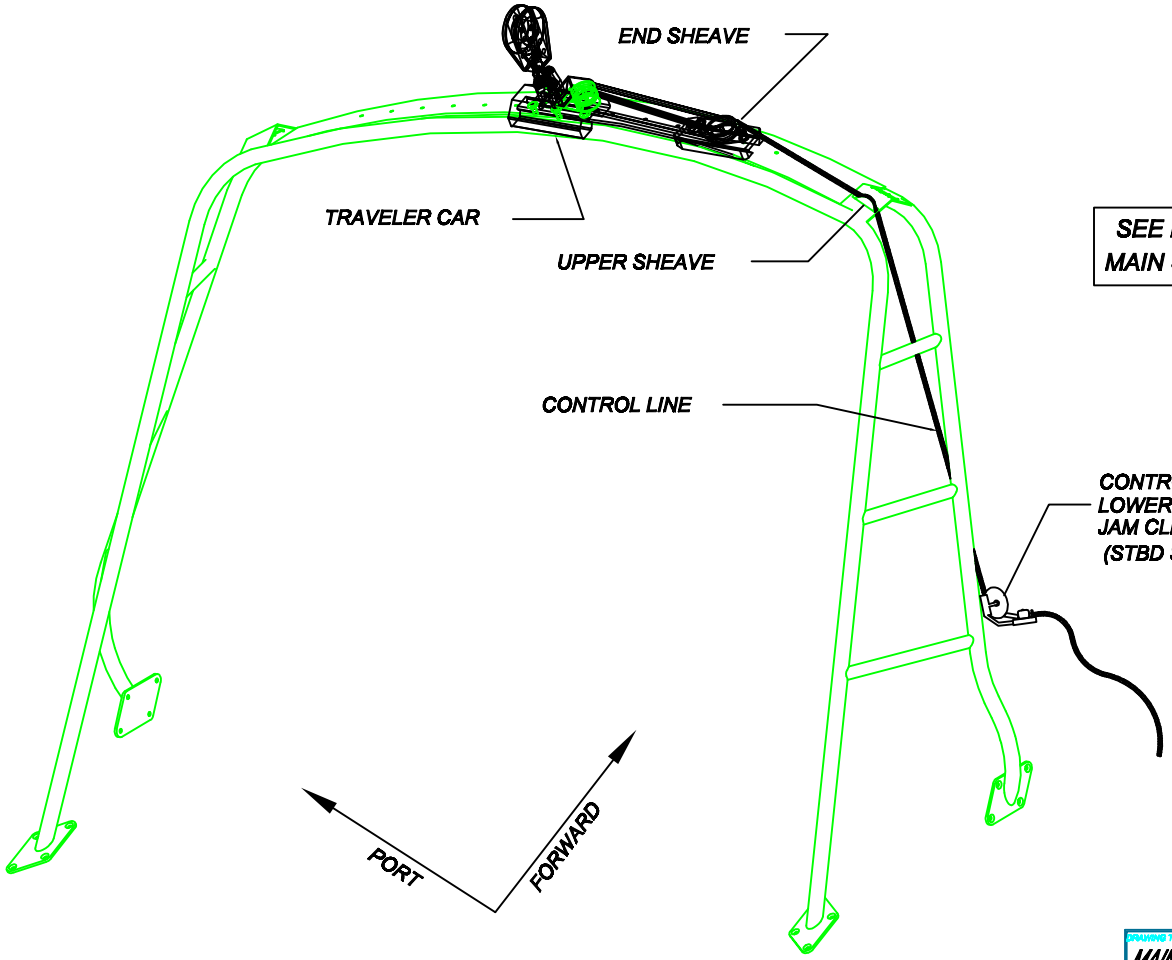

CONTROL LINE RUNS AROUND
LOWER SHEAVE THEN THRU
JAM CLEAT TO COCKPIT
(STBD SHOWN, PORT MIRROR IMAGE)

SEE PAGE 43A FOR
MAIN SHEET LINE RUNS

DRAWING TITLE: MAINSHEET PURCHASE/TRAVELER OPTION
DRAWING NO. 4268043B
REVISION NO. NONE
DRAWN BY: ENG
DATE:

This document discloses information for which HUNTER MARINE CORP. has proprietary rights.

HUNTER

ARCH INSTALLATION: NOTES AND TOOL LIST

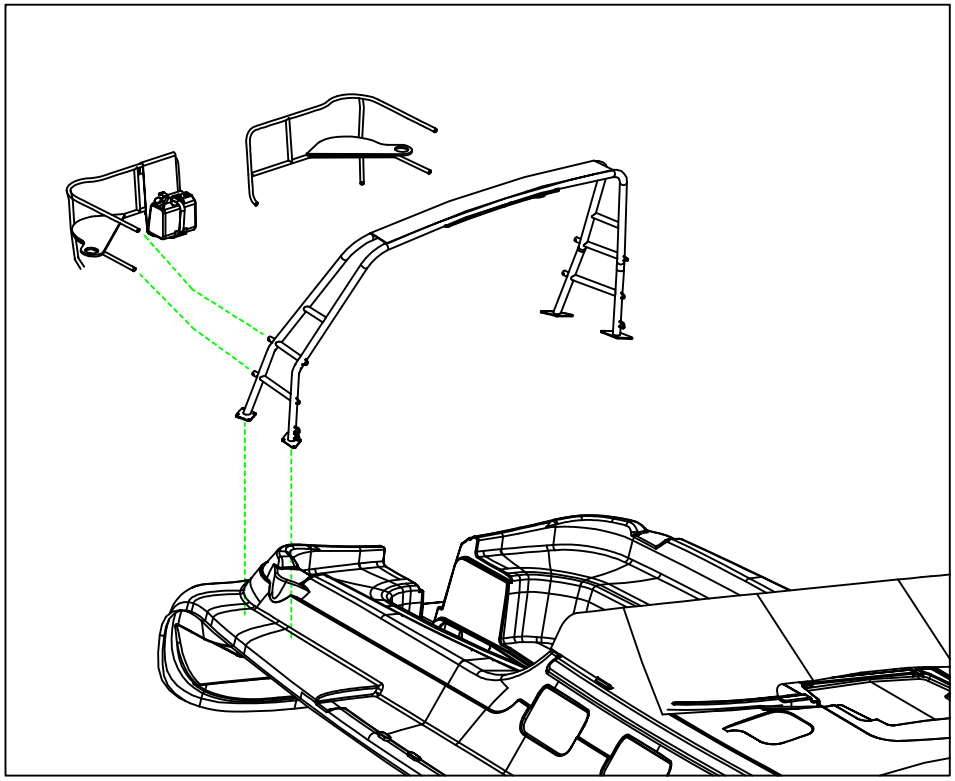

FOR CLARITY, THE STERNRAILS ARE DEPICTED IN AN EXPLODED VIEW AND THE STEERING PEDESTAL HAS BEEN OMITTED

NOTES:

1. IMPORTANT: READ ALL OF THE INSTALLATION INSTRUCTIONS THOROUGHLY BEFORE BEGINNING.
2. THIS JOB REQUIRES TWO PEOPLE. IT IS IMPORTANT THAT THE ARCH IS FIRMLY SUPPORTED UNTIL IT IS FULLY ATTACHED TO THE DECK.
3. WHEN INSTALLING ARCH: TO AVOID POSSIBLE INJURY, ORIENT THE DIRECTION OF THE ARCH (LEANING FORWARD) PRIOR TO BEGINNING THE INSTALLATION PROCESS.
4. SEE BELOW FOR A LIST OF TOOLS SUGGESTED FOR THE INSTALLATION PROCESS.
5. IMPORTANT: REMEMBER TO CHECK ALL THE ARCH BOLTS / NUTS AFTER THE INITIAL SEA TRIAL AND RETIGHTEN AS NECESSARY

SUGGESTED TOOL LIST:

DRILL AND 3/8" DRILL BIT (TO CLEAR SEALANT FROM HOLES)
3/8" DRIVE RATCHET
6" EXTENSION
9/16" DEEP & REGULAR SOCKET
9/16" WRENCH
SCREW DRIVER--PHILLIPS HEAD (LARGE P-4)
CAULK GUN
TUBE OF SEALANT (3M 5200)
NEVER SEIZE (BOLT LUBE)
RAZOR KNIFE
WIRE STRIPPERS/CRIMPS
RAGS
ACETONE OR LACQUER THINNER / CLEAN UP

DRAWING TITLE: ARCH INSTALLATION	
DRAWING NO. 4268044A	REVISION NO. None
DRAWN BY: ENG	DATE: 09/03/02

This document discloses information for which HUNTER MARINE CORP. has proprietary rights.

HUNTER

1. REMOVE ALL ACCESSORIES STOWED IN THE COCKPIT LOCKERS. THIS WILL ENABLE EASIER ACCESS WHEN FASTENING THE ARCH BOLTS
2. WITH 3/8" DRILL BIT, REMOVE ANY SEALANT FROM PRE-DRILLED ARCH HOLES.
3. CLEAN AROUND THE MOUNTING HOLES USING ACETONE OR LACQUER THINNER.
4. APPLY A GENEROUS AMOUNT OF 3M 5200 SEALANT AT THE ARCH MOUNTING HOLE LOCATIONS ON THE FOOT DECK.
5. TO AVOID POSSIBLE INJURY, ORIENT THE ARCH (LEANING FORWARD) PRIOR TO PLACING IT ON THE BOAT.
6. BEFORE PLACING ARCH ONTO ARCH PADS, ALIGN STERNRAIL PIPES WITH RECEIVER CUPS ON ARCH AND JOIN. DO NOT BOLT UNTIL OTHER COMPONENTS ARE IN PLACE.
7. PLACE THE ARCH ON THE DECK OF THE BOAT. ALIGN THE ARCH FOOT HOLES ON ONE SIDE(EITHER PORT OR STARBOARD) WITH THE CORRESPONDING PRE DRILLED DECK HOLES.
8. INSERT 3/8"(9.5mm) STAINLESS STEEL BOLTS THRU ALL HOLES IN ARCH FOOT AND INTO THE COAMING.
9. REPEAT STEP 8 WITH OTHER ARCH FOOT.
10. ACCESS THE UNDERSIDES OF THE DECK AT THE ARCH FOOT LOCATIONS AS FOLLOWS:
    STBD : THRU STARBOARD SIDE GULLWING LOCKER
    PORT: THRU PORT SIDE GULLWING LOCKER
11. INSTALL THE 1/8" (3.2mm) FENDER WASHERS ON THE INSIDE OF THE COAMING AND INSTALL LOCK WASHER AND S.S. NUT ON THE BOLT WHICH HAS BEEN INSERTED. TIGHTEN BOLT COMPLETELY. (IT IS IMPORTANT TO APPLY A SMALL AMOUNT OF NEVER SEIZE TO THE BOLT TO PREVENT "GAULING" OF THE THREADS.)
12. BE SURE TO INSTALL THE ARCH GROUNDING WIRE, LOCATED IN THE STARBOARD GULLWING LOCKER.
13. RECHECK THE ARCH FIT ONTO THE DECK. THE HEIGHT SHOULD MEASURE AT LEAST 6' 2" (1.88)
14. SECURELY TIGHTEN ALL THE NUTS AND BOLTS USING A CROSS TIGHTENING PATTERN. (DO NOT FORGET TO USE A SMALL AMOUNT OF LUBRICANT FOR THE BOLTS).
15. CLEAN EXCESS SEALANT FROM AROUND THE ARCH FEET AND COAMING AREAS USING ACETONE OR LACQUER THINNER..
16. RECHECK THE BOLTS AFTER THE INITIAL SEA TRIAL AND TIGHTEN AS NECESSARY.
17. AFTER ARCH IS SECURE, BOLT STERNRAIL FEET TO ARCH CUPS.

TYPICAL ARCH FOOT

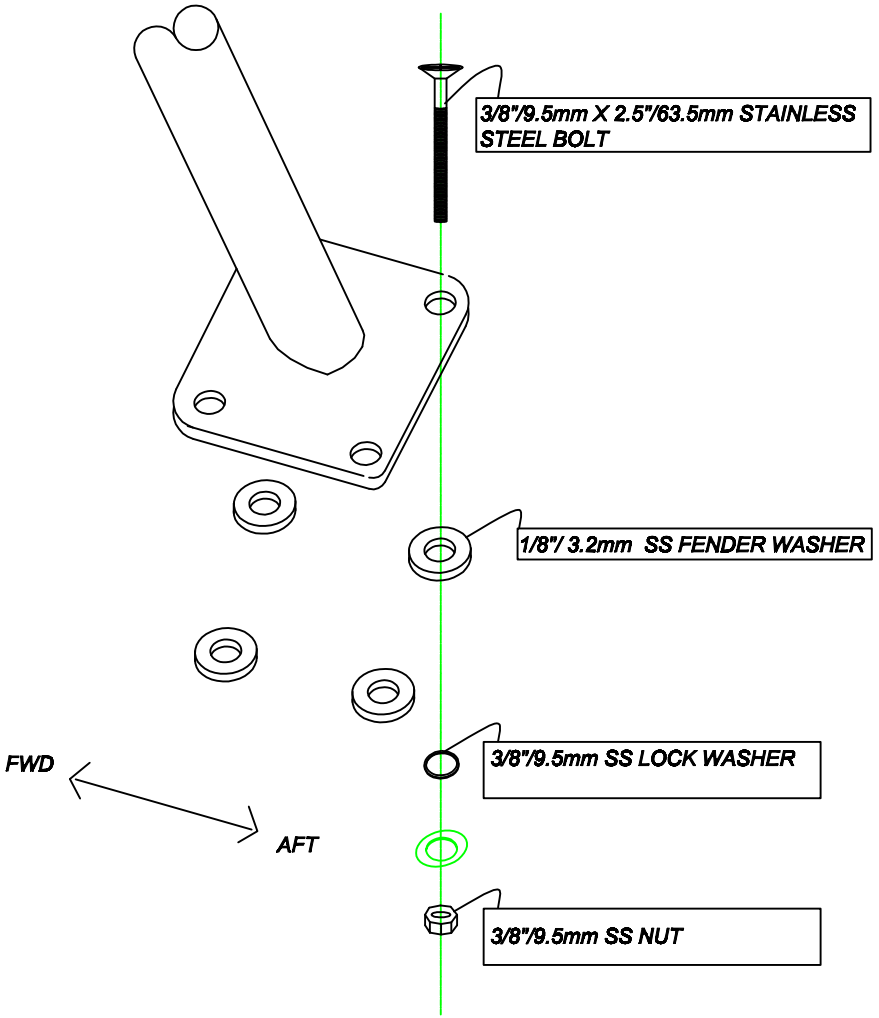

DRAWING TITLE: ARCH INSTALLATION (CONT'D)	
DRAWING NO. 4268044B	REVISION NO. None
DRAWN BY: ENG	DATE: 09/03/02

This document discloses information for which HUNTER MARINE CORP. has proprietary rights.

HUNTER

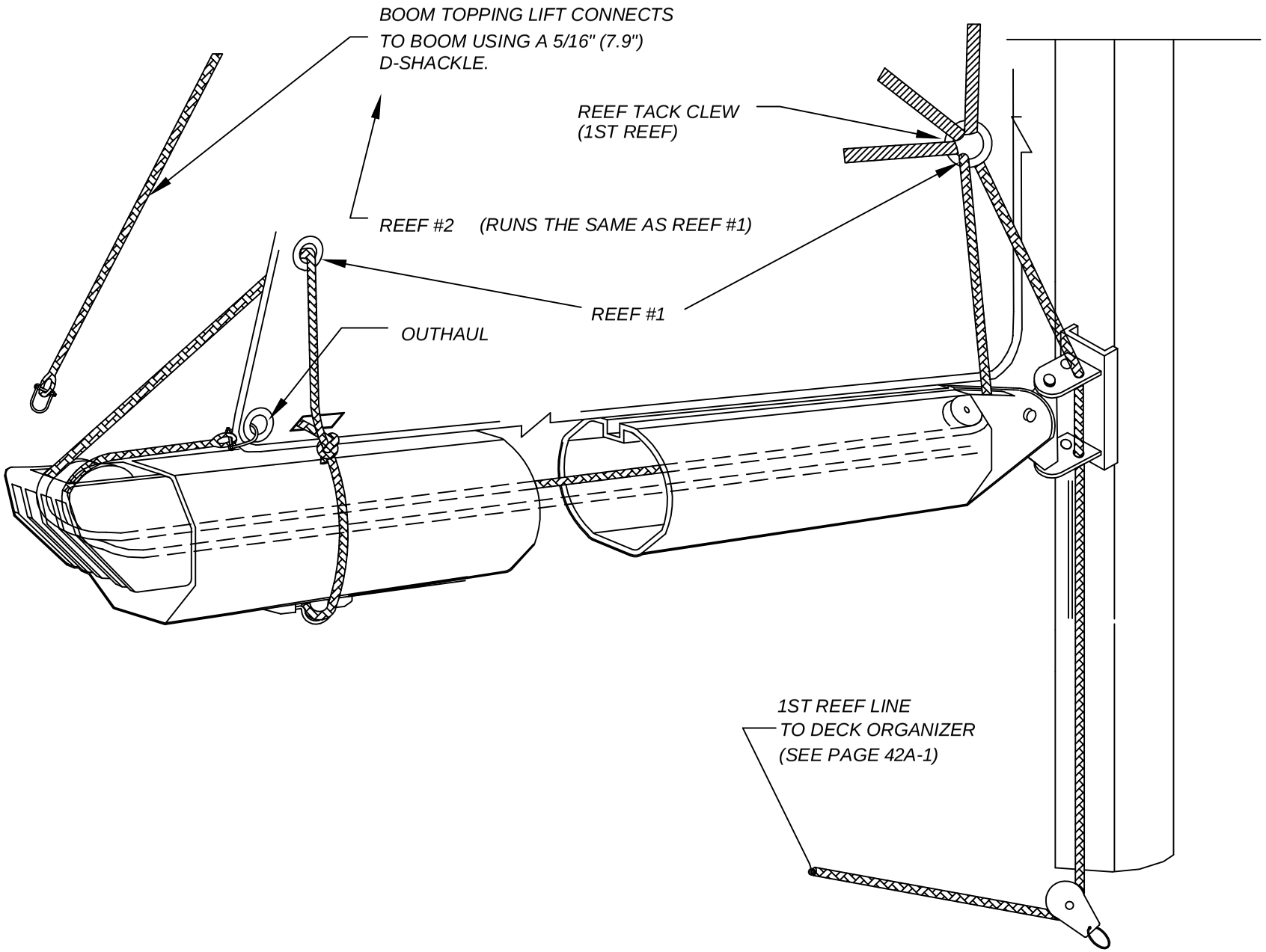

PAGE 45A

DRAWING TITLE: BOOM WITH REEFING LAYOUT

DRAWING NO. 4268045A | REVISION NO. NONE

DRAWN BY: ENG | DATE:

This document discloses information for which HUNTER MARINE CORP. has proprietary rights.

HUNTER

REEFING INSTRUCTIONS

1. SHACKLE TACK REEF BLOCKS TO FIRST AND SECOND REEF TACK CRINGLES.

2. RUN BOTH REEFING LINES AS ILLUSTRATED IN THE BOOM & REEF LAYOUT. BOTH PORTIONS OF THE REEFING LINE LEADING TO THE REEF TACK BLOCK MUST RUN THROUGH THE GOOSE NECK ON THE AFT OF THE SPAR. THE SHORTER REEF LINE WILL BE USED ON THE FIRST REEF (STARBOARD SIDE, GREEN) THE LONGER REEF LINE ON THE SECOND REEF (PORT SIDE, RED.)

3. RAISE THE MAIN SAIL.

4. EASE THE MAINSHEET AND VANG.

5. LOWER THE MAIN SAIL TO APPROXIMATELY THE FIRST REEF POSITION.

6. TAKE UP THE SLACK IN THE FIRST REEF LINE UNTIL THE TACK AND THE CLEW ARE DOWN TO ABOUT 2" ABOVE THE BOOM.

7. ADJUST THE MAIN HALYARD SO THAT THE TACK REEF BLOCK IS NOT CONTACTING THE GOOSE NECK ON THE FRONT OF THE SPAR AND IS APPLYING TENSION TO THE LUFF OF THE MAIN ABOVE THE REEF, NOT BELOW. THERE WILL BE APPROXIMATELY 6" (150mm) OF STRETCH IN THE MAIN LUFF AND MAIN HALYARD WHEN THE REEFING LINE IS TENSIONED, SO MAKE SURE THAT THIS IS ALLOWED FOR WHEN ADJUSTING THE MAIN HALYARD TO LOCATE THE TACK REEF BLOCK.

8. ALSO, TENSION THE REEF LINE WITH THE APPROPRIATE SELF-TAILING WINCH UNTIL THE CLEW REEF CRINGLE IS BROUGHT DOWN TO THE BOOM.

9. CONFIRM THAT THE TACK REEF BLOCK IS STILL CLEAR OF THE TACK SHACKLE AND THAT ONLY THE MAIN LUFF ABOVE THE REEF CRINGLE IS TENSIONED, NOT THE LUFF BETWEEN THE CRINGLE AND THE TOP STACKED SAIL SLIDE. EASE THE REEF LINE AND READJUST THE HALYARD IF NECESSARY.

10. MARK THE HALYARD AT THE STOPPER WITH A 1" (25mm) SINGLE BAND OF INDELIBLE MARKER INK. BY DROPPING THE HALYARD TO THIS MARK EVERY TIME A REEF IS REQUIRED THE HALYARD IS AUTOMATICALLY IN THE CORRECT POSITION FOR THE REEF.

11. REPEAT THE PROCEDURE FOR THE SECOND REEF, USING DOUBLE BANDS TO MARK THE HALYARD IN THE CORRECT POSITION.

REEFING PROCEDURE

1. HEAD UP INTO THE WIND.

2. EASE THE MAINSHEET AND VANG.

3. CHECK THE TOPPING LIFT FOR ADEQUATE BOOM SUPPORT.

4. LOWER THE MAIN HALYARD TO THE APPROPRIATE MARK, AND SNUB THE LINE WITH THE STOPPER.

5. TENSION THE REEFING LINE WITH THE SELF-TAILING WINCH UNTIL THE REEF CLEW IS BROUGHT DOWN TO THE BOOM. APPLY STOPPER AND TENSION THE MAIN HALYARD BACK UP. EASE THE TOPPING LIFT. (IF NEEDED)

SHAKING OUT A REEF

1. HEAD UP INTO THE WIND.

2. EASE THE MAINSHEET AND VANG. RELEASE THE TENSION ON THE TOPPING LIFT. (IF NEEDED)

3. RELEASE THE REEF STOPPER AND REMOVE REEF LINE FROM WINCH.

4. TENSION THE MAIN HALYARD TO RAISE SAIL, MAKING SURE REEF LINES RUN FREELY WHILE SAIL IS BEING RAISED. APPLY STOPPER TO MAIN HALYARD.

5. RE-TENSION VANG AND MAINSHEET. EASE THE TOPPING LIFT. (IF NEEDED)

DRAWING TITLE: REEFING INSTRUCTIONS	This document discloses information for which HUNTER MARINE CORP. has proprietary rights.
DRAWING NO.: 4268045B	REVISION NO.: NONE
DRAWN BY: ENG	DATE:

HUNTER

SLIDE THE BOLTROPE ON THE TWO HALVES OF THE COVER INTO THE BOLTROPE TRACKS (1) ON BOTH SIDES OF THE BOOM. START FROM THE AFT END AND MAKE YOUR WAY FORWARD.

INSTALL THE PVC BATTENS (2) INTO EACH HALF OF THE SAIL COVER. THERE ARE POCKETS (3) THAT OPEN TOWARDS THE FRONT, ON THE INSIDE OF THE COVER. SLIDE THE BATTENS INTO PLACE FROM THE FRONT, AND ROLL THE INSIDE LIP OF THE POCKET BACK IN ORDER TO HOLD THE BATTENS STATIONARY.

FEED THE LAZYJACK LINES (4) DOWN THROUGH THE GROMMETS/RINGS (5) IN THE SAIL COVER, STARTING AT THE TOP AND COMING OUT AT THE BOTTOM OF THE COVER. DEAD END THE LINES TO THE BAILS ON THE UNDERSIDE OF THE BOOM (6).

TIE THE AFT END OF THE SAIL COVER UP TO THE TOPPING LIFT LINE USING THE PIECE OF STRING PROVIDED (7) USE HALF HITCH KNOTS TO SECURE THE COVER IN PLACE AT THE OUTER END OF THE BOOM. THE REEF LINES RUN OUT THROUGH THE COVER SLOTS (8) AND TIE OFF.

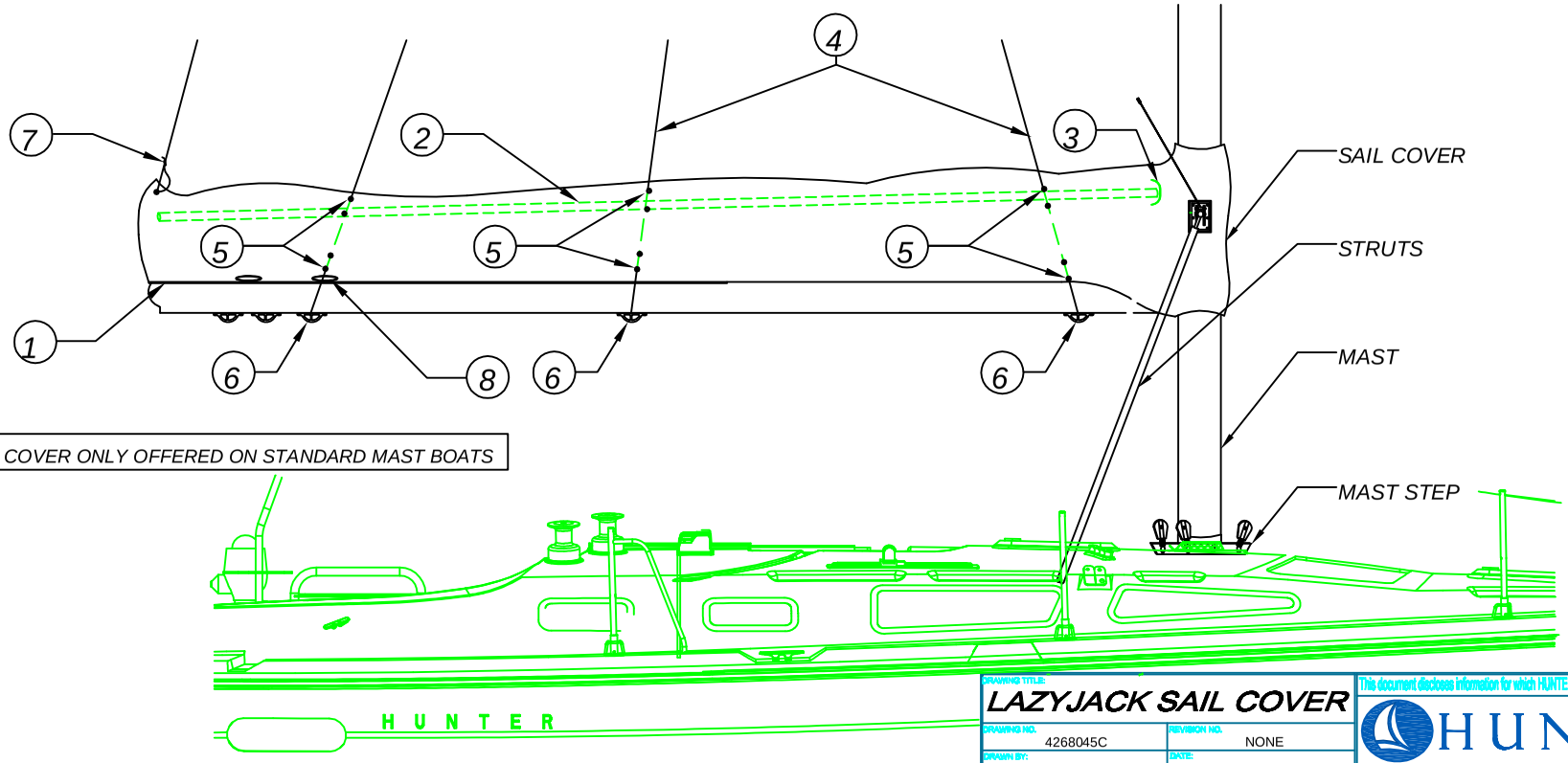

SAIL COVER ONLY OFFERED ON STANDARD MAST BOATS

PAGE 45C

DRAWING TITLE: LAZYJACK SAIL COVER

DRAWING NO. 4268045C | REVISION NO. NONE

DRAWN BY: ENG | DATE:

This document discloses information for which HUNTER MARINE CORP. has proprietary rights.

HUNTER

1. LAZYJACK WIRE ATTACHMENT @ UPPER SPREADER
2. LAZYJACK UPPER FIXED CABLE
3. THIMBLE OR BLOCK ON FIXED CABLE
4. 5/16" (7.9mm)FWD LAZYJACK LINE (THRU THIMBLE / BLOCK.
5. LOWER THIMBLE
6. 5/16" (7.9mm)AFT LAZYJACK LINE (THRU LOWER THIMBLE)
7. AFT BOOM BAIL (SECURE L.J. LINE END)
8. MID BOOM BAIL (SECURE OTHER END OF AFT L.J. LINE)
9. FWD BOOM L.J. CHEEK BLOCK (FWD L.J. LINE FED THRU)
10. LAZYJACK CLEAT ON BOOM (SECURE FWD L.J. LINE TO CLEAT)

NOTE: THE STARBOARD SIDE IS SHOWN.
MIRROR INSTRUCTIONS FOR PORT

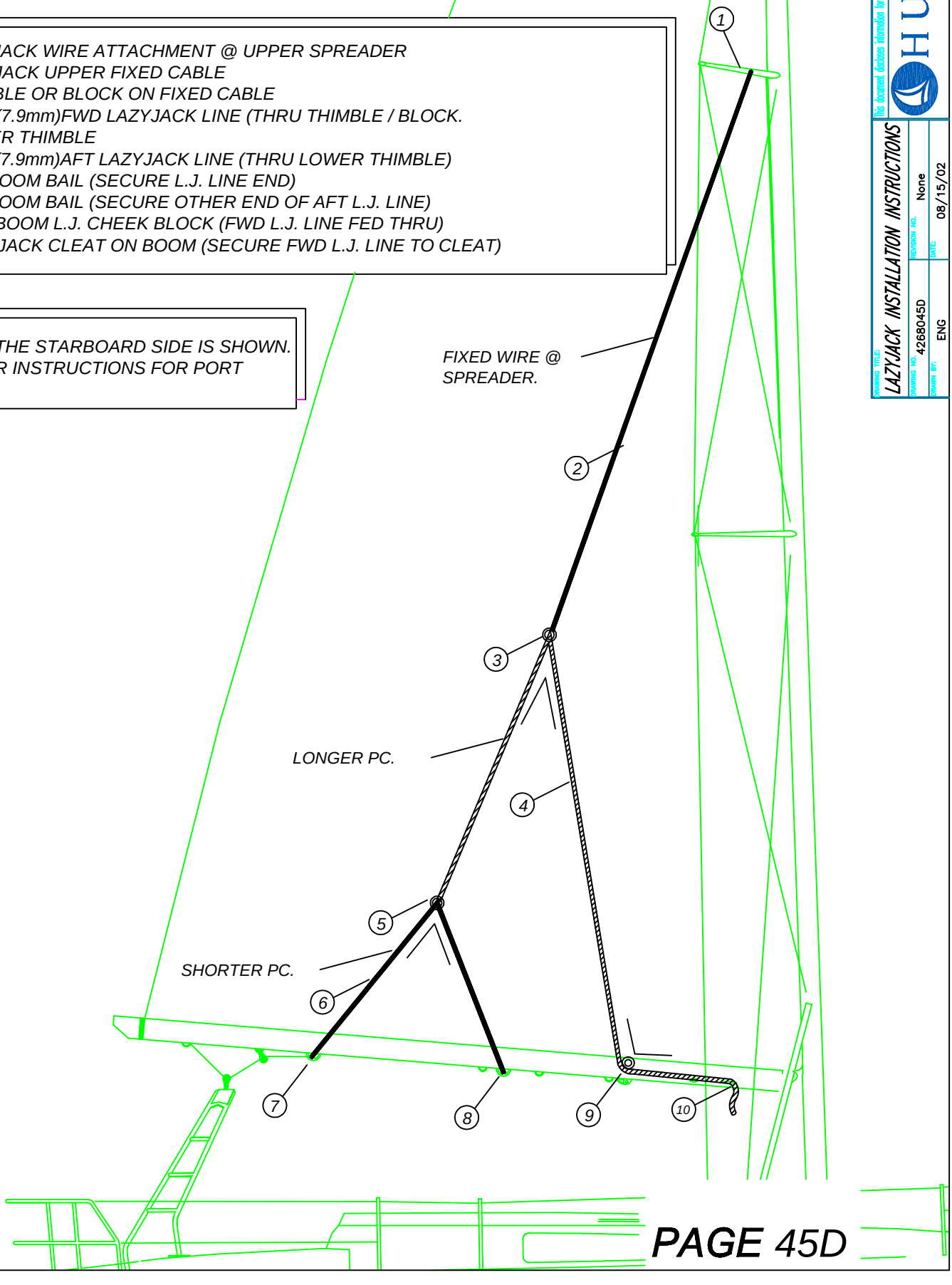

this document discloses information for which HUNTER MARINE CORP. has proprietary rights.

HUNTER

DRAWING TITLE: LAZYJACK INSTALLATION INSTRUCTIONS

DRAWING NO.	REVISION NO.	DATE:
42680450	None	08/15/02

DRAWN BY: ENG

H426 RUNNING RIGGING
STANDARD MAST

	SYSTEM	ITEM	QUANTITY	LINE SIZE	LINE TYPE	COLOR	END 1	LENGTH		END 2
*	I	MAIN HALYARD	1	7/16" (11mm)	XLS EXTRA	BLUE	HEADBOARD SHACKLE			BARE
	I	MAINSHEET	1	3/8" (9.5mm)	XLS	BLUE FLECK	SMALL EYE			BARE
*	I	BOOM TOPPING LIFT	1	5/16" (8mm)	LS	WHITE	SMALL EYE			
	I	REEFING LINE #1	1	3/8" (9.5mm)	LS	GREEN FLECK	BARE			BARE
	I	REEFING LINE #2	1	3/8" (9.5mm)	LS	RED FLECK	BARE			BARE
	I	VANG	1	3/8" (9.5mm)	LS	WHITE	SMALL EYE			BARE
	I	LAZY JACK WIRE	2	1/8" (3.2mm)	PLASTIC COATED 7x7 WIRE	WHITE	EYE & THIMBLE,SMALL SHACKLE			EYE & LARGE THIMBLE
	I	LAZY JACK LINE	2	5/16" (8mm)	LS	WHITE	BARE			BARE
	I	ADJUSTABLE LAZY JACK LINE	2	5/16" (8mm)	LS	WHITE	BARE			SPLICE & SS THIMBLE
*	II	JIB HALYARD	1	3/8" (9.5mm)	XLS	RED	SMALL EYE			BARE
	II	JIB SHEET	2	7/16" (11mm)	LS	RED FLECK	BARE			BARE
*	III	SPINNAKER HALYARD	1	3/8" (9.5mm)	XLS	BLACK	SNAP SHACKLE NF11000s			BARE

SYSTEMS KEY:
I-MAINSAIL SYSTEM
II-JIB SYSTEM
III-SPINNAKER SYSTEM
* COMES WITH MAST

OPTIONS

	I	MAIN TRAVELER LINE	2	5/16" (8mm)	LS	WHITE	SMALL EYE			BARE
	III	SPINN. SHEET	2	3/8" (9.5mm)	LS	BLACK FLECK	BARE			BARE

H426 RUNNING RIGGING
FURLING MAST

	SYSTEM	ITEM	QUANTITY	LINE SIZE	LINE TYPE	COLOR	END 1	LENGTH		END 2
*	I	MAIN HALYARD	1	7/16" (11mm)	XLS EXTRA	BLUE	HEADBOARD SHACKLE			BARE
	I	MAINSHEET	1	1/2" (12.5mm)	XLS	BLUE FLECK	SMALL EYE	36.58m	120 ft	BARE
	I	MAIN FURLING LINE	1	3/8" (9.5mm)	LS	BLUE	BARE	15.24m	50 ft	BARE
*	II	JIB HALYARD	1	3/8" (9.5mm)	XLS	RED	SMALL EYE			BARE
*	II	JIB SHEET	2	1/2" (11mm)	LS	RED	BARE	19.2 m	63 ft	BARE
	III	SPINNAKER HALYARD	1	7/16" (9.5mm)	XLS	BLACK	SNAP SHACKLE NF11000s	36.58m	120 ft	BARE

SYSTEMS KEY:
I-MAINSAIL SYSTEM
II-JIB SYSTEM
III-SPINNAKER SYSTEM
* COMES WITH MAST

OPTIONS

	I	MAIN TRAVELER LINE	2	5/16" (8mm)	LS	WHITE	SMALL EYE	7.92m	26 ft	BARE
	III	SPINN. SHEET	2	7/16" (9.5mm)	LS	BLACK FLECK	BARE	29.87m	98 ft	BARE

H426 B&R RIG WITH STRUTS DESCRIPTION

The B&R rig, utilized on the Hunter 426, eliminates the need for a backstay to allow for a more efficient mainsail shape. Fixed backstays are commonly being designed out of today's performance-oriented boats to allow the mainsail to incorporate a full roach design - a more aerodynamic shape both for racing and cruising performance.

To accomplish this, the B&R rig has 30 degree swept spreaders, creating 120 degrees between each rigging point. This tri-pod arrangement has excellent strength for sailboat rigs, and has been used for years to support huge radio towers.

The latest advancement to the B&R rig is the addition of mast struts. These struts stabilize the lower section of the mast, allowing compression loads to be spread, reducing the point loading at the mast base. They also create a strong point for the boom and spinnaker pole loadings. The struts function also allow us to use a smaller mast section reducing weight aloft to decrease the heeling and pitching moments, making for a more comfortable ride. Additionally, they provide a secure handhold when going forward.

The struts perform an important structural function, **therefore never sail your boat without the struts properly fitted**. If your 426 is equipped with the in-mast furling option, the mast is a larger section size and the struts are not utilized.

Additional support is given to the B&R rig (and is unique to it) with the addition of reverse diagonal rigging. For example, the diagonals that you see beginning by the top of the mast strut, ending at the tip of the spreader, supports and stabilizes the upper section of the mast as it creates a triangle with the upper shroud.

The B&R rig is designed to be pre-bent to further add rigidity to the mast section and eliminate the need for adjustable rigging (like backstay adjusters). This design should prove more reliable than a rig with adjustable backstays or runners, as there is less chance for error.

The large main, small jib, sail plan on the 426 also eliminates the need for large overlapping headsails (genoas), as the driving power comes from the much improved shape and size of the mainsail. This allows for an easier tacking small jib, creating good performance and more comfortable sailing as it is less work for the crew.

As the large main is creating additional mainsheet and leach loading, Hunter has included a cockpit arch whereby the mainsheet and leech loads are directed to the strong part of the boom (the outboard end) and is located at the heaviest loading point of the mainsail. The cockpit arch serves addition safety and comfort functions as handholds and cockpit canvas attachment points.

B&R rigs have been used on thousands of sailboats, and we are proud to incorporate this successful design on your new Hunter.

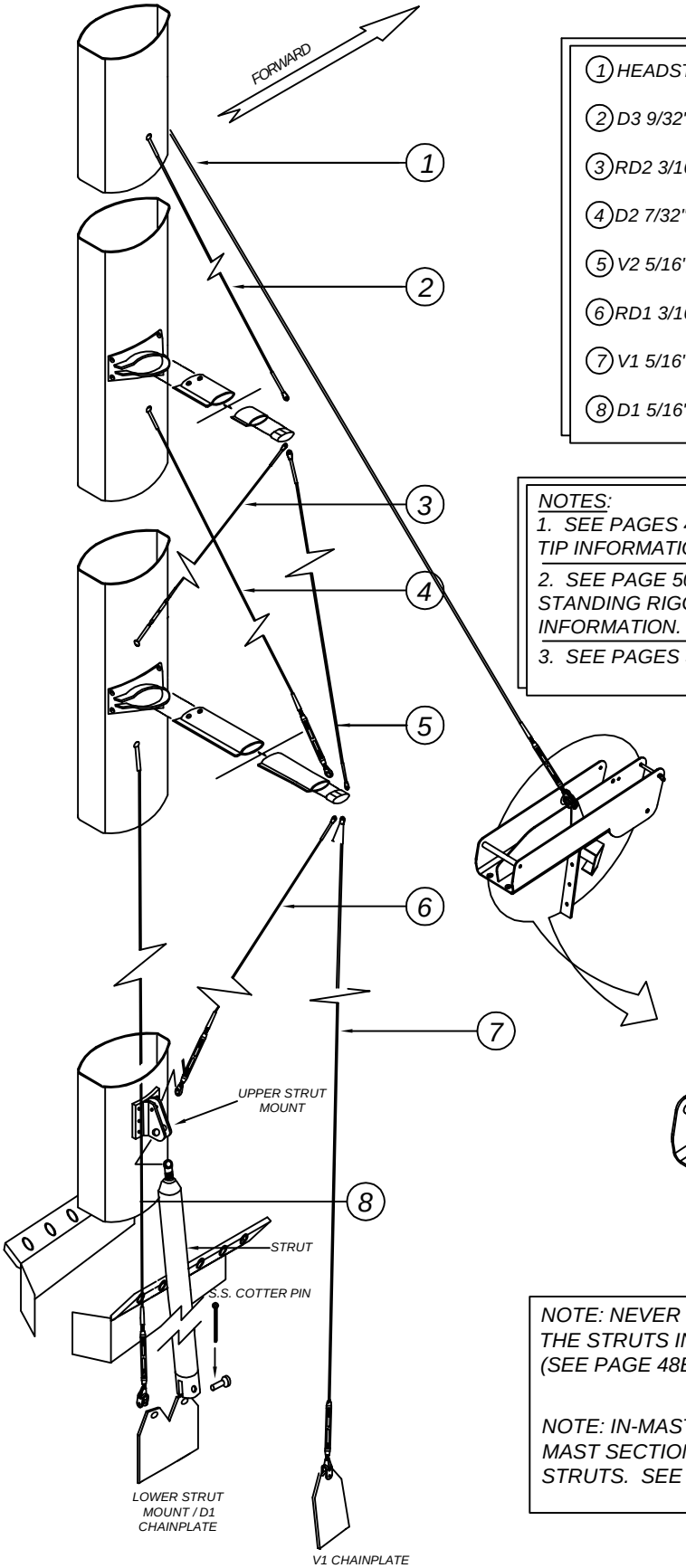

1. HEADSTAY 9/32" (7mm) 1 X 19
2. D3 9/32" (7mm) 1 X 19
3. RD2 3/16" (4.8mm) 1 X 19
4. D2 7/32" (6mm) 1 X 19
5. V2 5/16" (8mm) 1 X 19
6. RD1 3/16" (4.8mm) 1 X 19
7. V1 5/16" (8mm) 1 X 19
8. D1 5/16" (8mm) 1 X 19

NOTES:

1. SEE PAGES 49A & B FOR FURTHER SPREADER TIP INFORMATION
2. SEE PAGE 50A FOR STANDARD MAST STANDING RIGGING LENGTHS AND OTHER INFORMATION.
3. SEE PAGES 51 FOR FITTING DESCRIPTIONS

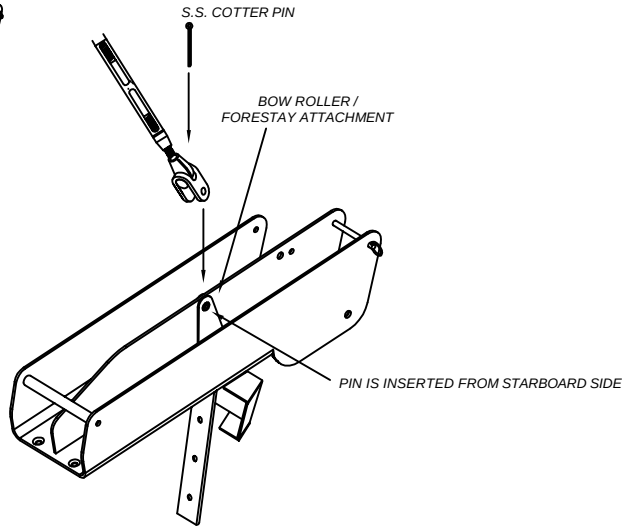

NOTE: NEVER TRY TO SAIL THE VESSEL WITHOUT THE STRUTS IN PLACE AND PROPERLY FASTENED (SEE PAGE 48B)

NOTE: IN-MAST FURLING OPTION USES A LARGER MAST SECTION AND THUS DOES NOT UTILIZE THE STRUTS. SEE FOLLOWING PAGE FOR MORE INFO.

HUNTER

This document discloses information for which HUNTER MARINE CORP. has proprietary rights.

DRAWING TITLE: STANDING RIGGING (STANDARD)

DRAWING NO. 4268048A-1

REVISION NO. NONE

DRAWN BY: ENG

DATE:

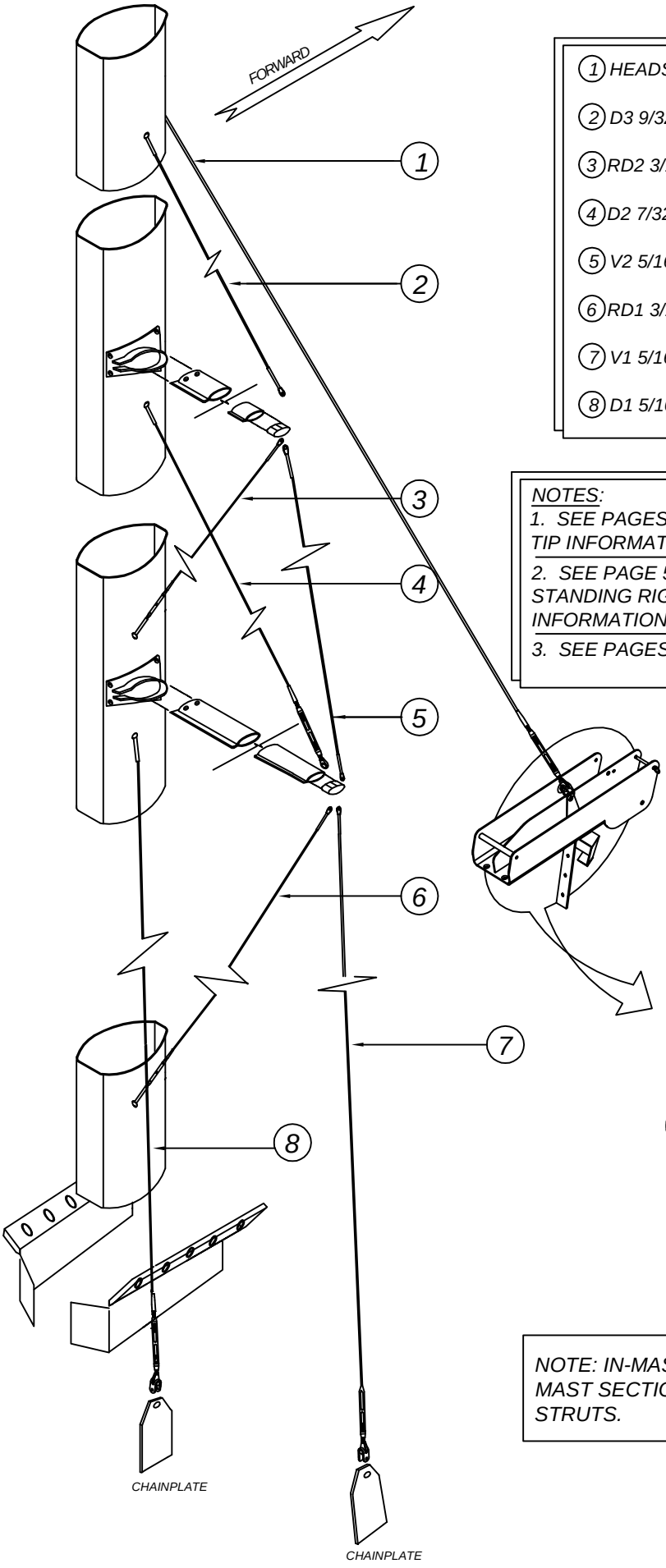

1. HEADSTAY 9/32" (7mm) 1 X 19
2. D3 9/32" (7mm) 1 X 19
3. RD2 3/16" (4.8mm) 1 X 19
4. D2 7/32" (6mm) 1 X 19
5. V2 5/16" (8mm) 1 X 19
6. RD1 3/16" (4.8mm) 1 X 19
7. V1 5/16" (8mm) 1 X 19
8. D1 5/16" (8mm) 1 X 19

NOTES:

1. SEE PAGES 49A & B FOR FURTHER SPREADER TIP INFORMATION
2. SEE PAGE 50B FOR STANDARD MAST STANDING RIGGING LENGTHS AND OTHER INFORMATION.
3. SEE PAGES 51 FOR FITTING DESCRIPTIONS

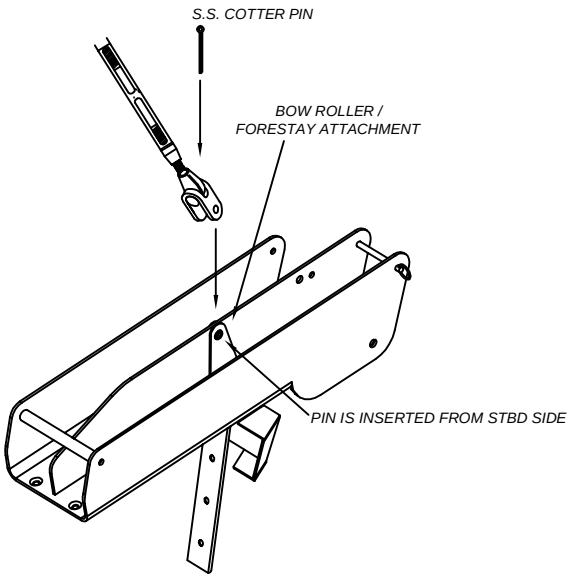

NOTE: IN-MAST FURLING OPTION USES A LARGER MAST SECTION AND THUS DOES NOT UTILIZE THE STRUTS.

This document discloses information for which HUNTER MARINE CORP. has proprietary rights.

HUNTER

DRAWING TITLE: STANDING RIGGING (FURLING)

DRAWING NO.	REVISION NO.	DATE
4268048A-2	NONE	
DRAWN BY: ENG		

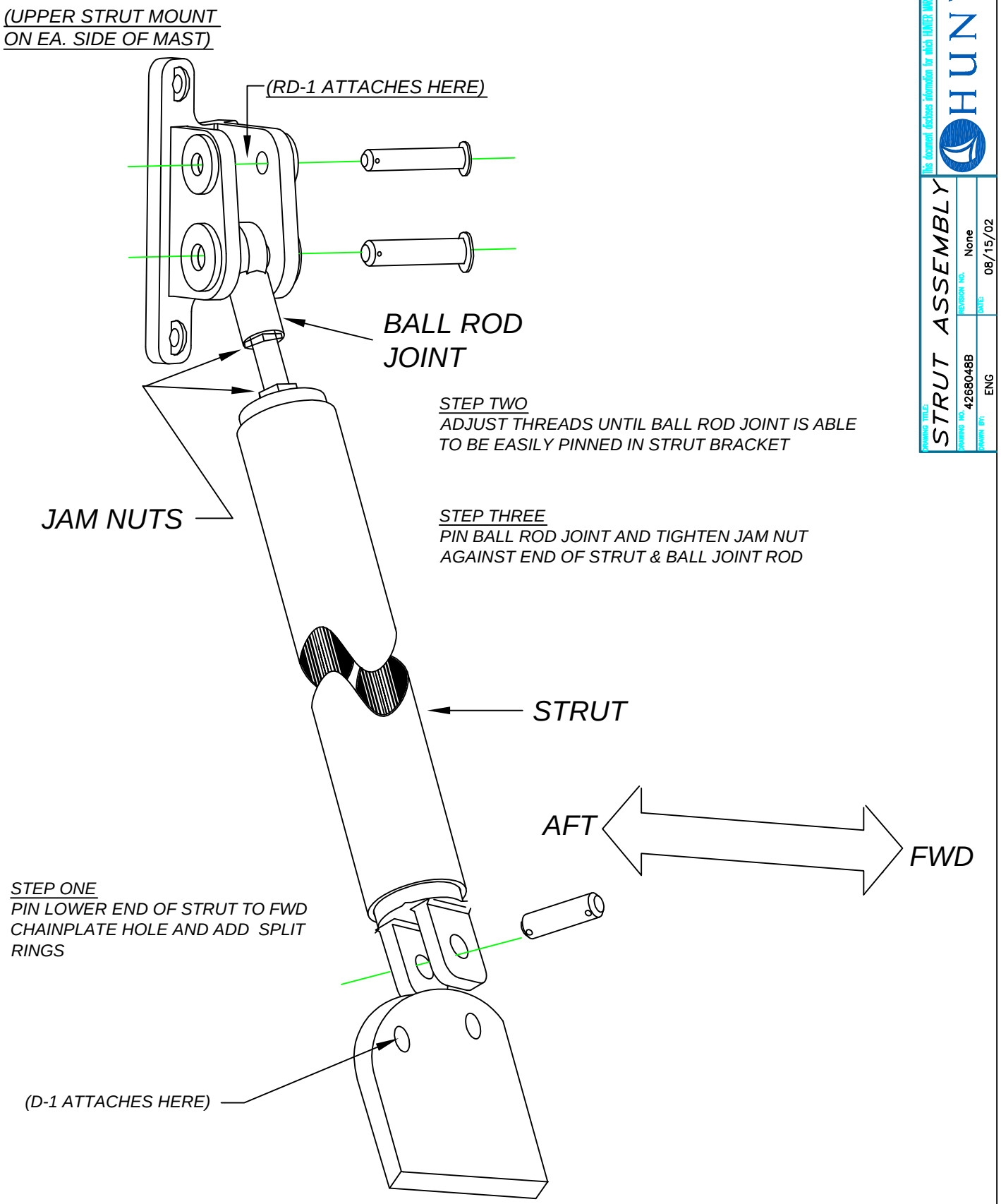

STEP TWO
ADJUST THREADS UNTIL BALL ROD JOINT IS ABLE TO BE EASILY PINNED IN STRUT BRACKET

STEP THREE
PIN BALL ROD JOINT AND TIGHTEN JAM NUT AGAINST END OF STRUT & BALL JOINT ROD

STEP ONE
PIN LOWER END OF STRUT TO FWD CHAINPLATE HOLE AND ADD SPLIT RINGS

this document discloses information for which HUNTER WWME CORP. has proprietary rights.

HUNTER

DRAWING TITLE: STRUT ASSEMBLY
DRAWING NO.: 4268048B
REVISION NO.: None
DRAWN BY: ENG
DATE: 08/15/02

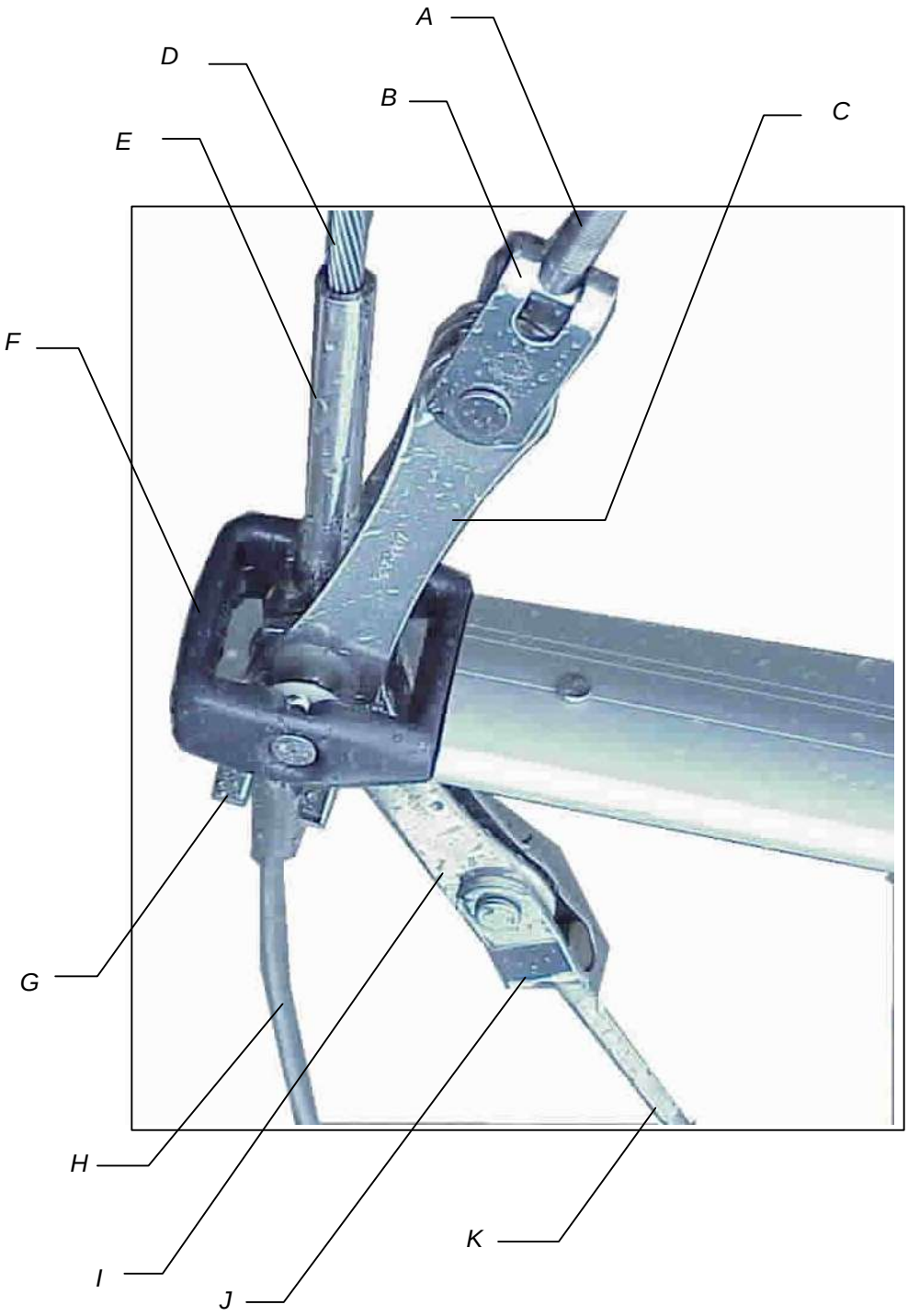

A	D2 stem T	G	jaw toggle
B	jaw toggle	H	V1
C	link plates	I	link plates
D	V2	J	jaw toggle
E	marine eye	K	RD1 stem T
F	spreader tip casting		

This document discloses information for which HUNTER MARINE CORP. has proprietary rights.

HUNTER

DRAWING TITLE: SELDEN LOWER SPREADER TIP

DRAWING NO.: 4268049A | REVISION NO.: NONE

DRAWN BY: MG | DATE: 7/13/01

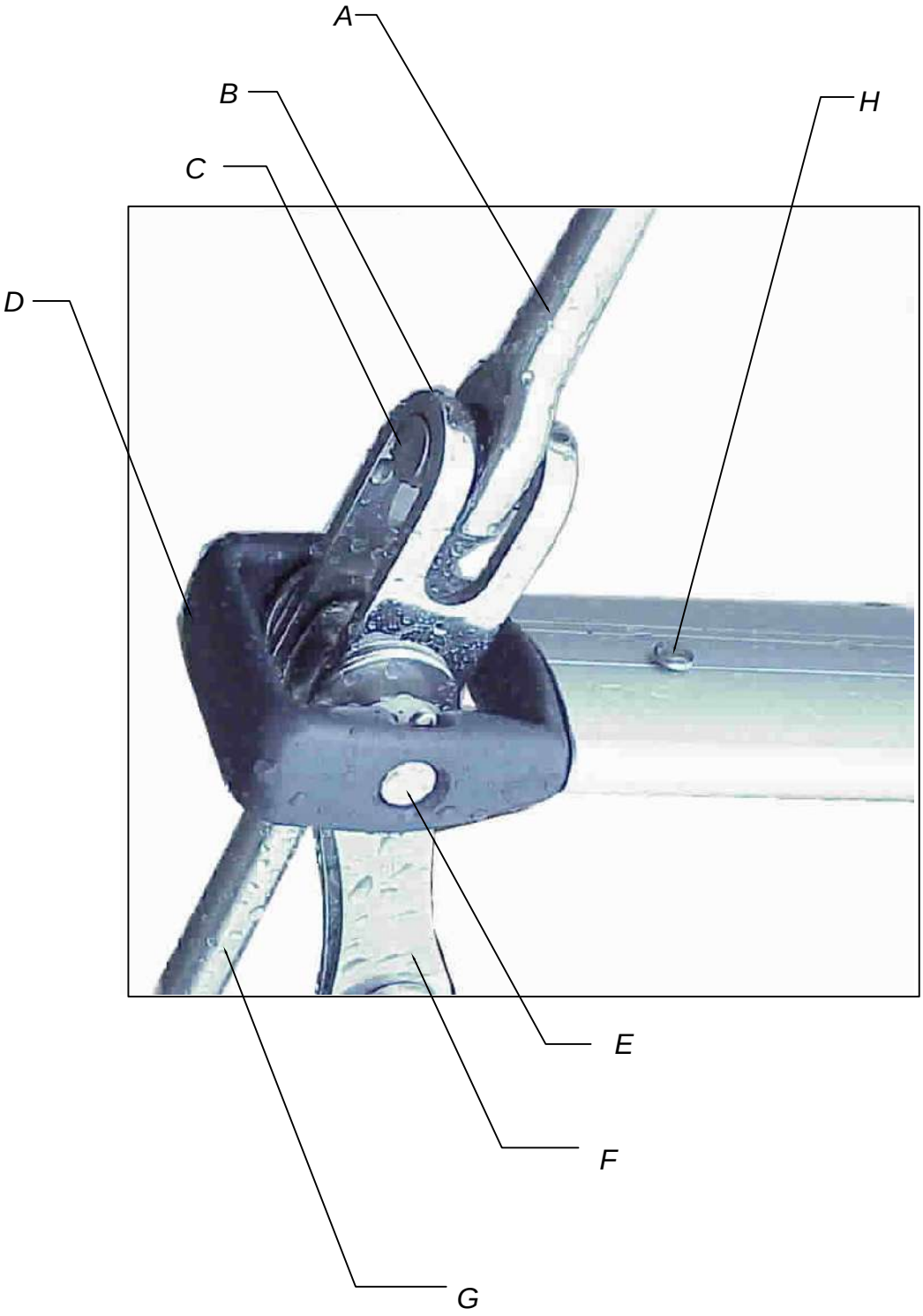

A	D3 marine eye	E	3/8" (.95cm) pin
B	jaw toggle	F	link plates
C	1/2" (1.27cm) pin	G	marine eye stem
D	spreader tip casting	H	spreader tip casting fastener

This document discloses information for which HUNTER MARINE CORP. has proprietary rights.

HUNTER

DRAWING TITLE: SELDEN UPPER SPREADER TIP

DRAWING NO.: 4268049B

DRAWN BY: ENG

REVISION NO.: NONE

DATE: 6/13/01

426 SELDEN STANDARD MAST STANDING RIGGING

PART NUMBER		**406796**	DATE		REVISION:			
OPT/STD		ITEM	QUANTITY	WIRE SIZE	UPPER END	LENGTH		LOWER END
1	STD	HEADSTAY	1	9/32" (7mm) 1x19	MARINE EYE			JAW TOGGLE LOOSE, 1/2" PIN
2	STD	V1	2	5/16" (8mm)1x19	RIGGING TOGGLE JAW W/ 1/2" PIN			TURNBUCKLE 9-16-16, TOGGLE FOR 1/2" PIN
3	STD	V2	2	5/16" (8mm) 1x19	RIGGING TOGGLE JAW W/ 1/2" PIN			MARINE EYE w/ 1/2" PIN
4	STD	D1	2	5/16" (8mm)1x19	841-1/4" SHROUD TERMINAL			TURNBUCKLE 8-12-12 W/ JAW TOGGLE FOR 3/8" PIN
5	STD	D2	2	7/32" (6mm) 1x19	GIBB 740-3/16 T-HOOK SHROUD TERMINAL			TURNBUCKLE 6-12-12, W JAW TOGGLE W/ 3/8" PIN
6	STD	D3	2	9/32" (7mm) 1x19	841-1/4" SHROUD TERMINAL			MARINE EYE w/ 1/2" PIN
7	STD	RD1	2	3/16" (4.75mm) 1x19	RIGGING TOGGLE JAW			GIBB T-BALL SHROUD TERMINAL TURNBUCKLE 6-10-10
8	STD	RD2	2	3/16" (4.75mm) 1x19	RIGGING TOGGLE JAW W/ 3/8" PIN			GIBB T-BALL SHROUD TERMINAL TURNBUCKLE 6-10-10

426 SELDEN FURLING MAST STANDING RIGGING

PART NUMBER		**406796**	DATE		REVISION:			
OPT/STD		ITEM	QUANTITY	WIRE SIZE	UPPER END	LENGTH		LOWER END
1	STD	HEADSTAY	1	3/8" (9.5mm) 1x19	MARINE EYE	15.011m	49 ft 2-7/8"	JAW TOGGLE LOOSE, 1/2" PIN
2	STD	V1	2	3/8" (9.5mm) 1x19	RIGGING TOGGLE JAW W/ 1/2" PIN	5.268m	17 ft 3-3/8"	TURNBUCKLE 9-16-16, TOGGLE FOR 1/2" PIN
3	STD	V2	2	3/8" (9.5mm) 1x19	RIGGING TOGGLE JAW W/ 1/2" PIN	4.533m	14 ft 10-5/8"	MARINE EYE w/ 1/2" PIN
4	STD	D1	2	3/8" (9.5mm) 1x19	841-1/4" SHROUD TERMINAL	4.963m	16 ft 3-3/8"	TURNBUCKLE 8-12-12 W/ JAW TOGGLE FOR 3/8" PIN
5	STD	D2	2	9/32" (7.14mm) 1x19	GIBB 740-3/16 T-HOOK SHROUD TERMINAL	4.374m	14 ft 4-3/8"	TURNBUCKLE 6-12-12, W JAW TOGGLE W/ 3/8" PIN
6	STD	D3	2	3/8" (9.5mm) 1x19	841-1/4" SHROUD TERMINAL	4.609m	15 ft 1-7/16"	MARINE EYE w/ 1/2" PIN
7	STD	RD1	2	3/16" (4.75mm) 1x19	RIGGING TOGGLE JAW	4.503m	14 ft 9-5/8"	GIBB T-BALL SHROUD TERMINAL TURNBUCKLE 6-10-10
8	STD	RD2	2	3/16" (4.75mm) 1x19	RIGGING TOGGLE JAW W/ 3/8" PIN	4.5327m	14 ft 10-5/8"	GIBB T-BALL SHROUD TERMINAL TURNBUCKLE 6-10-10

NOTE: SEE PAGES 50A & 50B FOR ACTUAL RIG LENGTHS.

V = VERTICAL
D = DIAGONAL
RD = REVERSE DIAGONAL

1 = LOWER
2 = INTER.
3 = UPPER

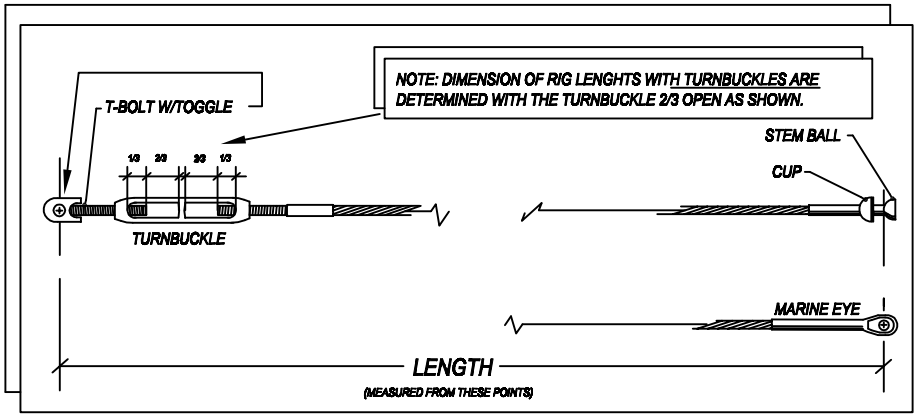

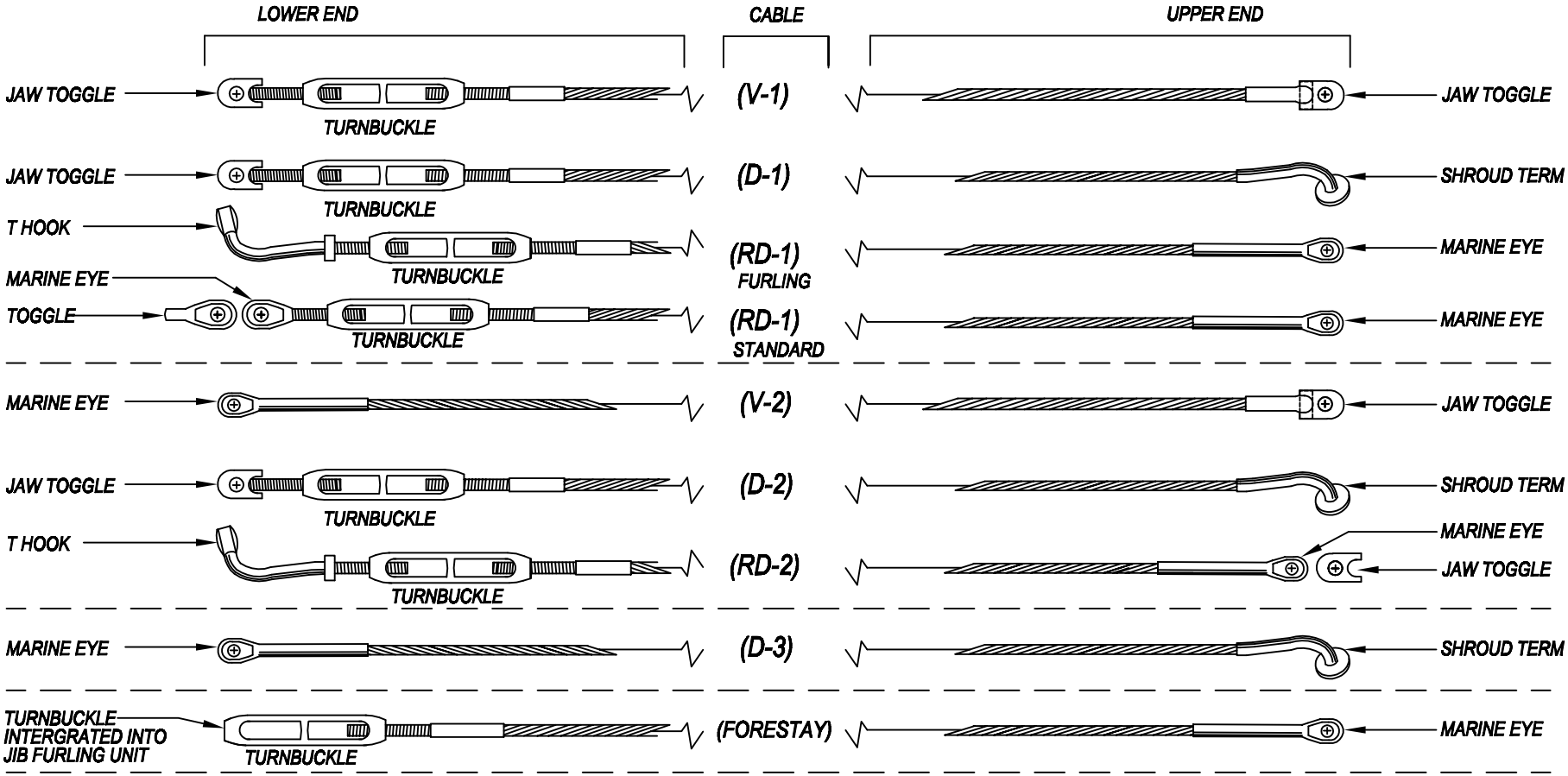

PAGE 51

DRAWING TITLE: STANDING RIGGING DETAILS
DRAWING NO. 4268051
REVISION NO. NONE
DRAWN BY: ENG
DATE:

This document discloses information for which HUNTER MARINE CORP. has proprietary rights.

HUNTER

TUNING THE H426 B&R RIG

The easiest method for tuning the B&R rig is to perform step one as follows before the mast is stepped, with it lying aft side down on two sawhorses. Begin with all rigging slack. If the mast is already stepped, loosen all the rigging, and then proceed to step one.

1. Start with all the rigging slack. Then induce the mast bend by tightening the reverse diagonals (diamonds). Measure the bend by tensioning a line or the main halyard between the masthead and the gooseneck. The maximum amount of bend should be no more than 8" [203mm] for the standard rig and no more than 2" [50mm] for the furling mast. Measured perpendicular from the aft face of the mast to the halyard at the deepest part of the bend. It can be less than that based on the sail shape and your own preference. The bend should also be evenly distributed along the mast to give a smooth shape. Keep in mind that bending a furling mast may make it more difficult to furl and will not do much to flatten the sail as in a standard rig. It is very important that the mast also be straight from side to side at this time. Tighten or loosen the reverse diagonals to achieve this.

2. Step the mast with all shrouds attached but with the turnbuckles completely loosened (if the mast was not already stepped).

3. Attach the jib halyard to a cleat on the bow to support the mast in a raked position (the masthead should be about 2'-0" [~6cm] behind the step). Attach the verticals and tighten them until you can just see the hole for the cotter pin in the turnbuckle. Tighten the jib halyard until you can attach the forestay. At this point the masthead should be raked so that a weight hung on the main halyard hangs about 1' behind the mast step.

4. Use the main halyard to check that the mast is centered from side to side. Pull it tight and mark the halyard next to the verticals chainplate. Now do the same to the other side to see if the marks line up. If not, tighten and/or loosen the verticals until the marks line up. Once the masthead is centered, begin tightening the verticals until the turnbuckles are approximately half closed. While tightening the verticals you may notice the bend in the mast increasing. Now you can tighten the lowers, which will tend to straighten the lower part of the mast. Be sure to tighten port and starboard sides evenly.

5. Now you should tighten the headstay until it is approximately half closed as well. This should induce the appropriate amount of headstay tension. Never use anything more than a pair of wrenches to tighten your rigging. If you use an extended piece of pipe on the handle of a wrench you can over tighten the rigging and do damage to the mast or rigging.

6. On the Hunter 426 it is necessary to go up the mast in a bosun's chair to tighten the number 2 diagonal shroud (D2 or intermediate shroud). Always use caution when "going aloft". You should always use a mountain climbing harness or Bosun's Chair intended for this use. Always tie into the harness with the halyard using a bowline and then secure the shackle as a back up as the knot is more reliable than a mechanical fastener. The person hoisting you aloft should keep the halyard stopper closed to prevent falls. Good communication between the two of you is also important. Tighten the D2 until it has just become tight and then add two complete turns. While at the first spreader, look up the back of the mast to see if it is straight (rather than bent from side to side). If it is not straight then adjust the appropriate D2 to straighten it.

7. Have the person on deck carefully lower you. They should keep the halyard wrapped at least twice around the winch and should always have one hand able to stop the halyard from running free. Once on deck look up the back of

the mast and see if it is straight (rather than bent from side to side). If not then adjust the lowers (D1) until it is.

8. If you have the standard rig you need to attach the struts at this time. Attach the lower end of the strut to the smaller hole in the chainplate. Adjust the length by turning the ball joint bearing in the upper end of the strut until the holes in the pin can be attached. It is normal to have some play between the strut and the chainplate and strut bracket

9. The final test is to go sailing in 10-15 knots of wind. If when sailing upwind, the shrouds on the leeward side are slack then tighten them to remove about half the slack keeping note of the number of turns. Then tack and do the same to the other side. Do this until you are happy with the tension and the leeward side does not get loose when the boat is heeled. Now sight up the mast to be sure it is still relatively straight from side to side. If it is not then adjust to appropriate rigging to correct it. For example: if the mast is straight until the upper spreader and then hooks to the windward side then you will have to revisit steps 6 and 7 above. Remember to always tighten the leeward shroud, tack and tighten the new leeward shroud the same amount. This prevents damage to the turnbuckles and is also much easier to do. Keep in mind it is also possible to have something too tight such as a diagonal shroud.

10. At this point you should have adequate headstay tension. The sails are built for an average of 14" [350mm] of headstay sag, possibly more or less depending upon light or heavy air. The bend in the standard mast should be about 4" [100mm] and 1" [25mm] in the furling mast and it should be nearly straight from side to side when sailing upwind. If any of these are not true then revisit the appropriate step above to correct it. If the sag in the headstay is too much then adding tension to the verticals will fix it.

11. Once the rig is tuned you should make sure to add the cotter pins to all the rigging bending back the ends and taping them to prevent snagged lines, sails and fingers.

Remember that rigging, like everything else, can age. As it gets older it may need to be replaced. The frequency for which this becomes necessary depends on the climate and conditions in which the boat is sailed. For example: if you sail in the Caribbean it should be replaced every 2-3 years compared to every 10 for the great lakes. You should consult a professional rigger for advice.

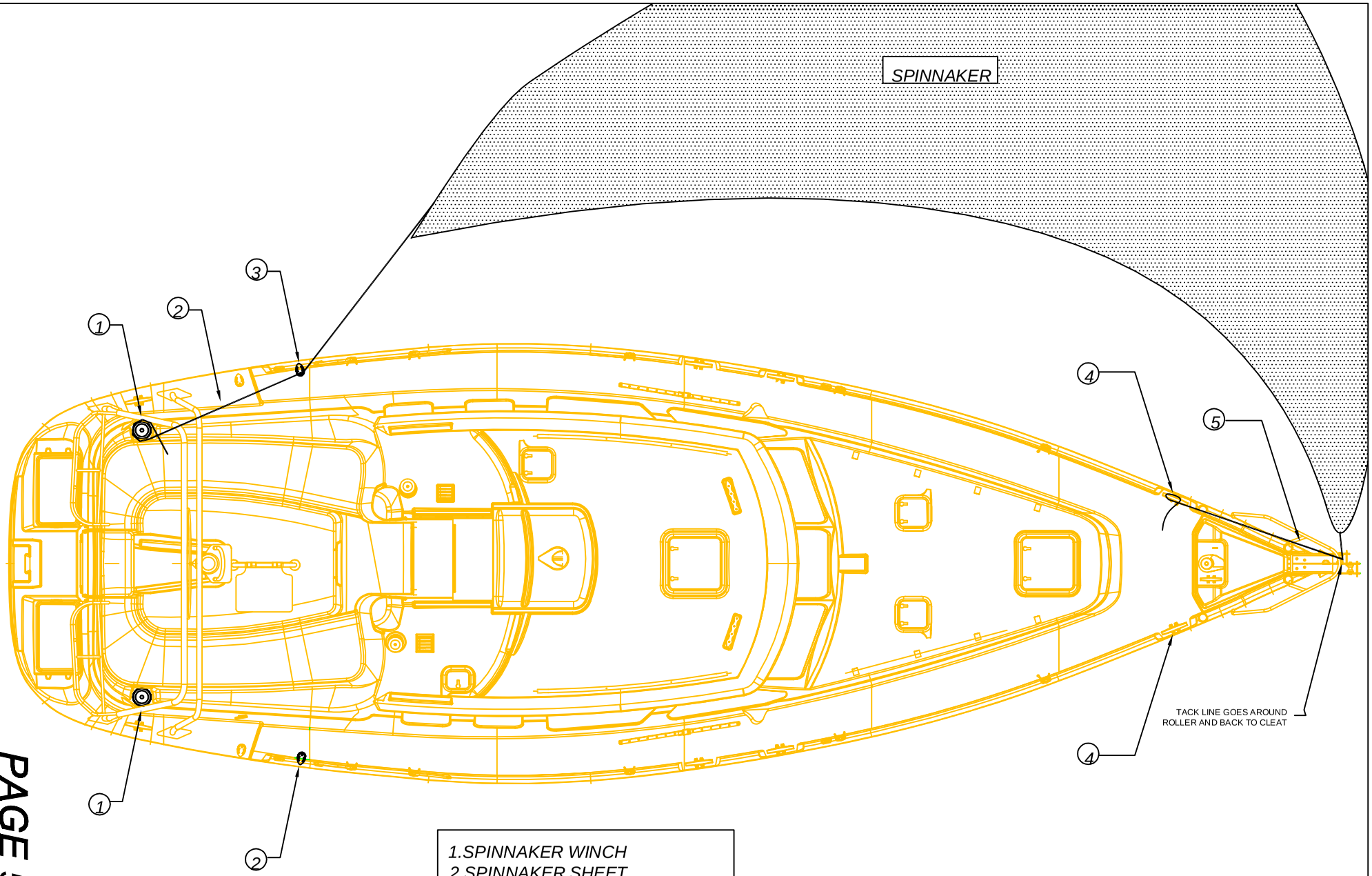

1.SPINNAKER WINCH
2.SPINNAKER SHEET
3.SPINNAKER SHEET BLOCK
4.SPINNAKER TACK LINE CLEAT
5.SPINNAKER TACK LINE

SEE PAGES 42A-1&2 FOR SPINNAKER HALYARD LAYOUT

DRAWING TITLE: OPTIONAL SPINNAKER LAYOUT

DRAWING NO.	REVISION NO.
4268054	None
DRAWN BY:	DATE:
ENG	07/11/02

This document discloses information for which HUNTER MARINE CORP. has proprietary rights.

HUNTER

ENGINE OPERATING INSTRUCTIONS:

① FILL DIESEL TANK WITH DIESEL FUEL

② CHECK ENGINE OIL LEVEL (SEE YANMAR MANUAL)

③ OPEN ENGINE RAW WATER PICKUP SEACOCK (SEE PAGES 60A-1)

④ TURN ON "START BATTERY SELECTOR SWITCH" (LOCATED AT THE NAVIGATION STAION)

⑤ TURN KEY TO START POSITION, RELEASE WHEN ENGINE STARTS
NOTE" IF ENGINE APPEARS TO HAVE TROUBLE STARTING, SEE YANMAR MANUAL

⑥ TO SHUT ENGINE DOWN: PUSH RED BUTTON AT KEY SWITCH PANEL
UNTIL ENGINE STOPS RUNNING THEN TURN KEY TO OFF POSITION.

WARNING: DO NOT LEAVE AFT HATCHES/ PORTS OPEN WHILE ENGINE IS RUNNING. THERE EXISTS A POSSIBILITY OF EXHAUST POISONING, OR EVEN DEATH.

SEE PAGE 63D-1 FOR OPTIONAL GENERATOR OPERATING INSTRUCTIONS

DRAWING TITLE: ENGINE SYSTEM OPERATION
DRAWING NO. 4268055A
REVISION NO. NONE
DRAWN BY: ENG
DATE:

This document discloses information for which HUNTER MARINE CORP. has proprietary rights.

HUNTER

SYSTEMS SCHEMATIC

- ENGINE
  - WATER INTAKE
    - THRU-HULL
    - SEA COCK
    - STRAINER
  - EXHAUST
    - ELBOW
    - HOSE
    - MUFFLER
  - FUEL SYSTEM
    - FEED
    - RETURN
    - TANK
    - FILTER
    - VALVE @ TANK
- RUNNING GEAR
  - SHAFT
  - COUPLING
  - DRIPLESS
- CONTROLS
  - SHIFT
  - THROTTLE
  - PANEL HARNESS
- ELECTRICAL SYSTEM
  - BATT SW
    - STARTING BATTERY
    - HOUSE BATTERY
      - OPT. INVERTER
      - 12V SYSTEM
      - 110V SYSTEM
        - SHORE POWER

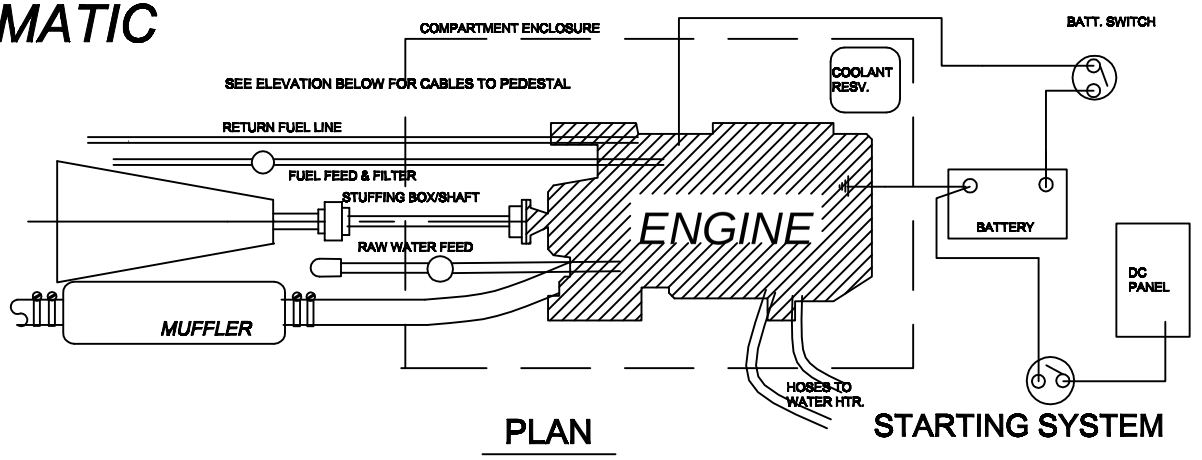

PLAN

STARTING SYSTEM

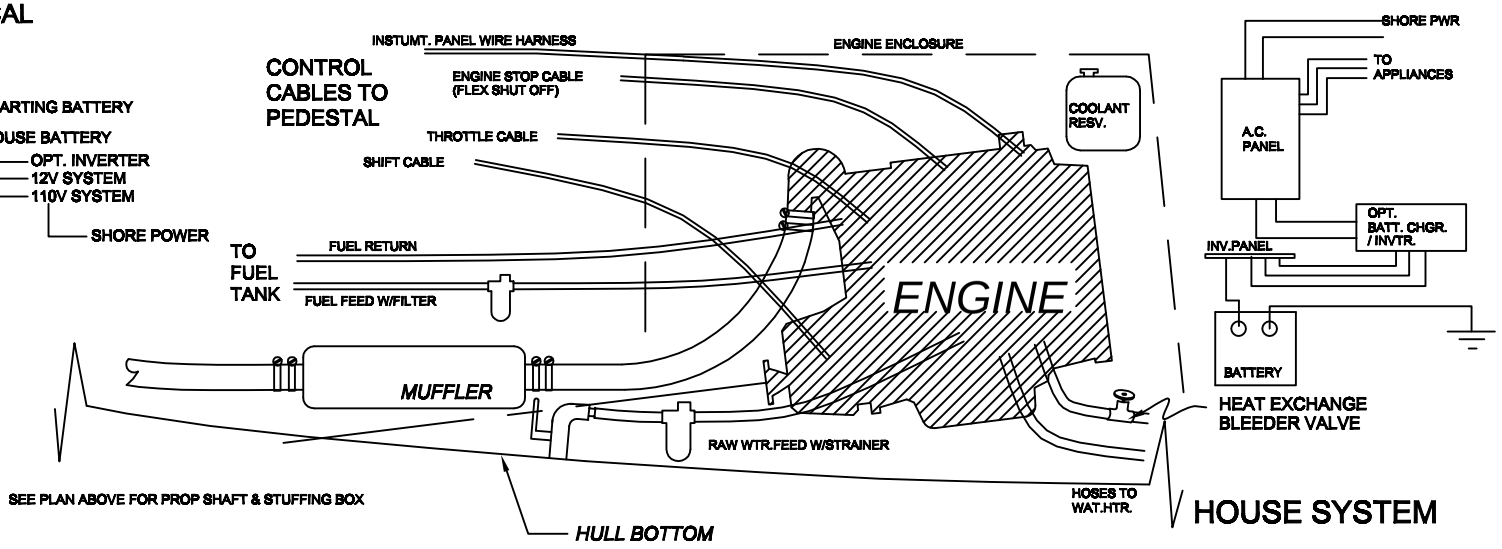

ELEVATION

HOUSE SYSTEM

NOTE: THIS DWG. IS SCHEMATIC FORM SEE SPECIFIC SYSTEM DWGS. FOR BATTERIES/SWITCHES/ CHARGER ETC. LOCATIONS AND WIRE RUNS.

PAGE 55B

DRAWING TITLE: ENGINE COMPARTMENT LAYOUT	
DRAWING NO.: 4268055B	REVISION NO.: NONE
DRAWN BY: ENG	DATE:

This document discloses information for which HUNTER MARINE CORP. has proprietary rights.

HUNTER

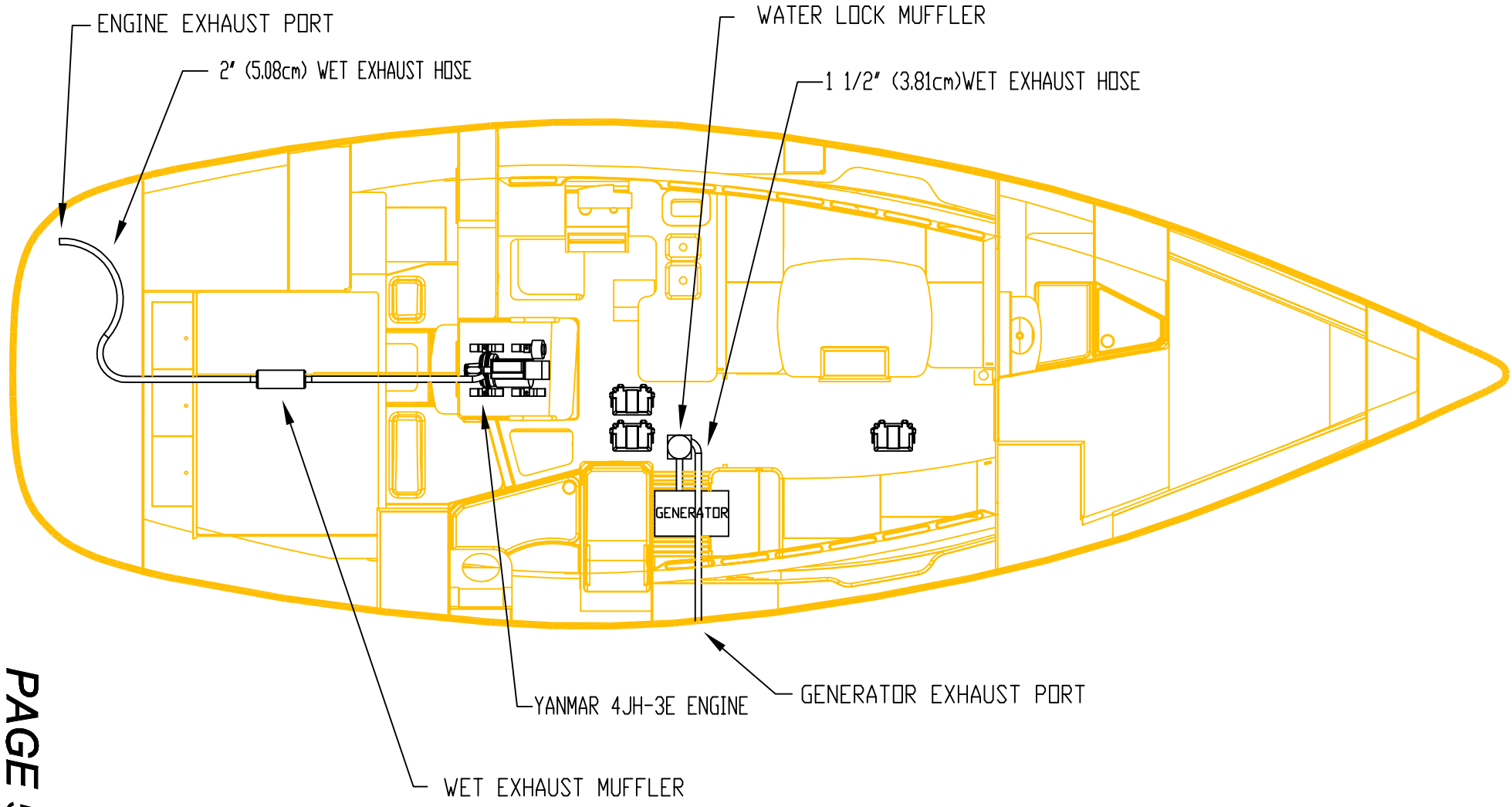

PAGE 55C

DRAWING TITLE: EXHAUST SYSTEM LAYOUT	
DRAWING NO. 4268055C	REVISION NO. None
DRAWN BY: ENG	DATE: 07/11/02

This document discloses information for which HUNTER MARINE CORP. has proprietary rights.

HUNTER

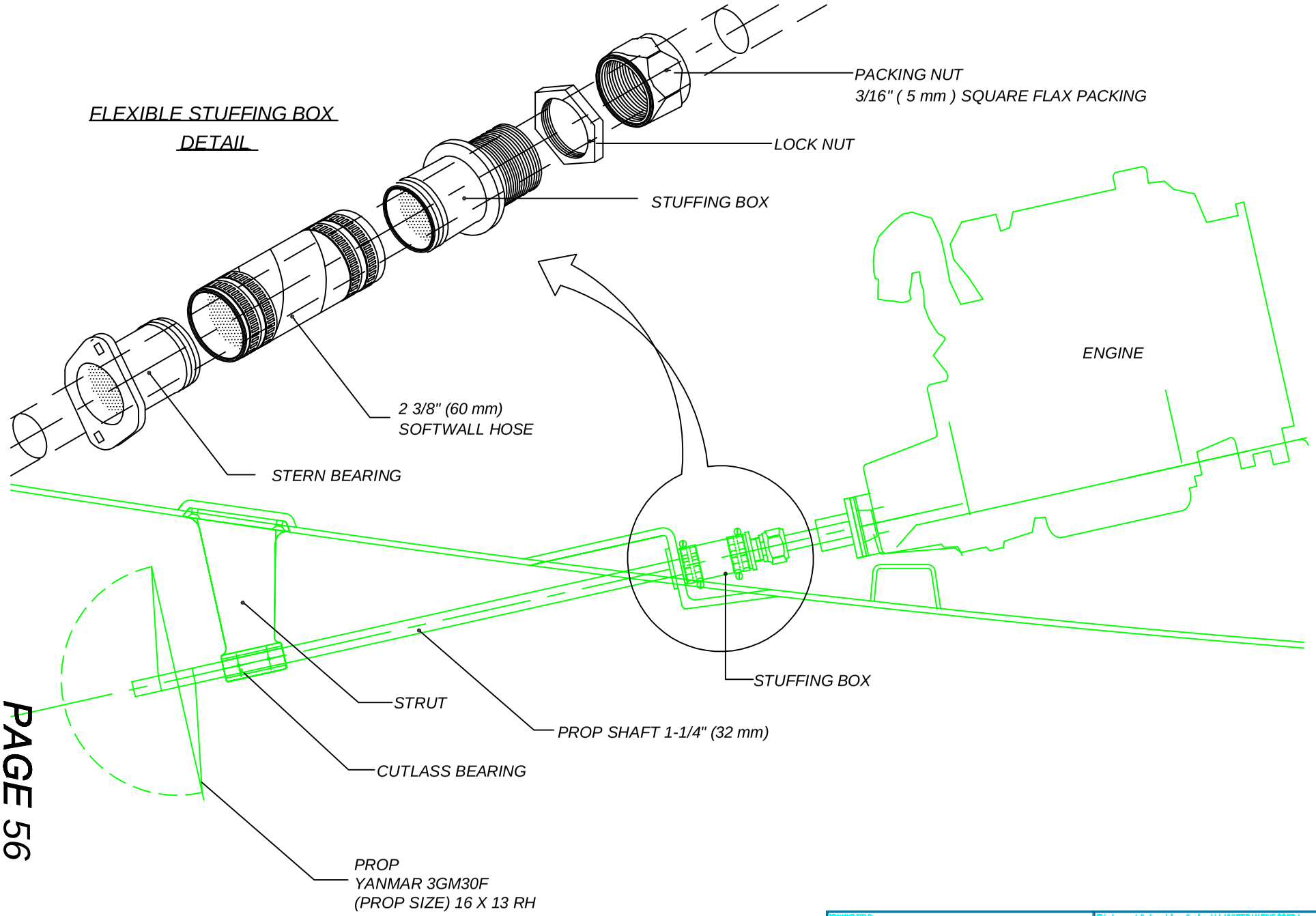

DRAWING TITLE: STUFFING BOX DETAIL

DRAWING NO.	REVISION NO.
4268056	NONE
DRAWN BY: ENG	DATE:

This document discloses information for which HUNTER MARINE CORP. has proprietary rights.

HUNTER

FRESH WATER SYSTEM OPERATION:

1. FILL TANK WITH FRESH WATER (SEE PAGE 60B FOR FILL LOCATIONS)
2. OPEN ISOLATOR VALVE (SEE PAGE 57B FOR LOCATION)
3. OPEN DESIRED MANIFOLD VALVES (SEE PAGE 57C)
4. TURN BATTERY SELECTOR SWITCH TO THE (1 , 2 OR BOTH) POSITION
   "FLIP" MAIN PANEL BREAKERS @ BATTERY SWITCH TO THE "ON" POSITION
   (PANEL LOCATED AT THE NAV STATION)
5. TURN ON "D.C. MAIN" BREAKER ON MAIN BREAKER PANEL
6. TURN ON "WATER PRESSURE" BREAKER ON MAIN BREAKER PANEL
7. "HOT WATER" IS ATTAINABLE BASICALLY IN TWO WAYS...
   - A. BY HEATING THE WATER THRU THE ENGINE HEAT EXCHANGER UNIT
   - B. BY SUPPLYING 110V.A.C. BY "DOCKSIDE SHORE POWER".
8. TO HEAT BY "ENGINE" SEE PAGE 55A FOR ENGINE OPERATING INSTRUCTIONS.

NOTE: WHEN COOLANT IS INSTALLED, BLEED AIR FROM HEAT EXCHANGER LINES TO WATER HEATER.
CRANK ENGINE, OPEN BLEEDER VALVE (SEE PAGE 55B) UNTIL AIR IS GONE FROM LINES

9. TO HEAT BY "SHORE POWER"
   - A. HOOK UP SHORE POWER CABLE/S
   - B. TURN ON A.C. MAIN BREAKER ON MAIN BREAKER PANEL
   - C. TURN ON "WATER HEATER" BREAKER ON MAIN BREAKER PANEL

NOTE: AS WITH ALL WATER HEATERS, BE SURE THE UNIT IS FILLED WITH WATER
BEFORE APPLYING POWER TO UNIT, TO AVOID DAMAGE TO HEATING ELEMENT

DRAWING TITLE: WATER SYSTEM OPERATION
DRAWING NO. 4268057A | REVISION NO. NONE
DRAWN BY: ENG | DATE:

This document discloses information for which HUNTER MARINE CORP. has proprietary rights.

HUNTER

Ⓐ WATER TANK
Ⓑ TANK VENT HOSE
Ⓒ TANK VENT
Ⓓ TANK FILL HOSE
Ⓔ TANK FILL
Ⓕ ISOLATOR VALVE
Ⓖ LINE OUT TO MANIFOLD
Ⓗ WATER FILTER
Ⓘ WATER PUMP
Ⓙ WATER MANIFOLD
Ⓚ HEAD SINK & SHOWER LINES BUNDLED
Ⓛ HOT & COLD LINES TO HEAD SINK
Ⓜ HOT & COLD LINES TO HEAD SHOWER
Ⓝ WATER HEATER
Ⓞ COLD LINE TO WATER HEATER
Ⓟ HOT LINE FROM WATER HEATER TO MANIFOLD
Ⓠ HOT &COLD LINES TO COCKPIT SHOWER
Ⓡ HOT & COLD LINES TO OPTIONAL WASHER/DRYER
Ⓢ SHORE INLET
Ⓣ COLD LINE TO OPTIONAL ICE MAKER

ALL WATER LINES ARE 15mm TUBING

TANK VENT HOSE IS 3/4" (19mm)

TANK FILL HOSE IS 1-1/2" (38mm)

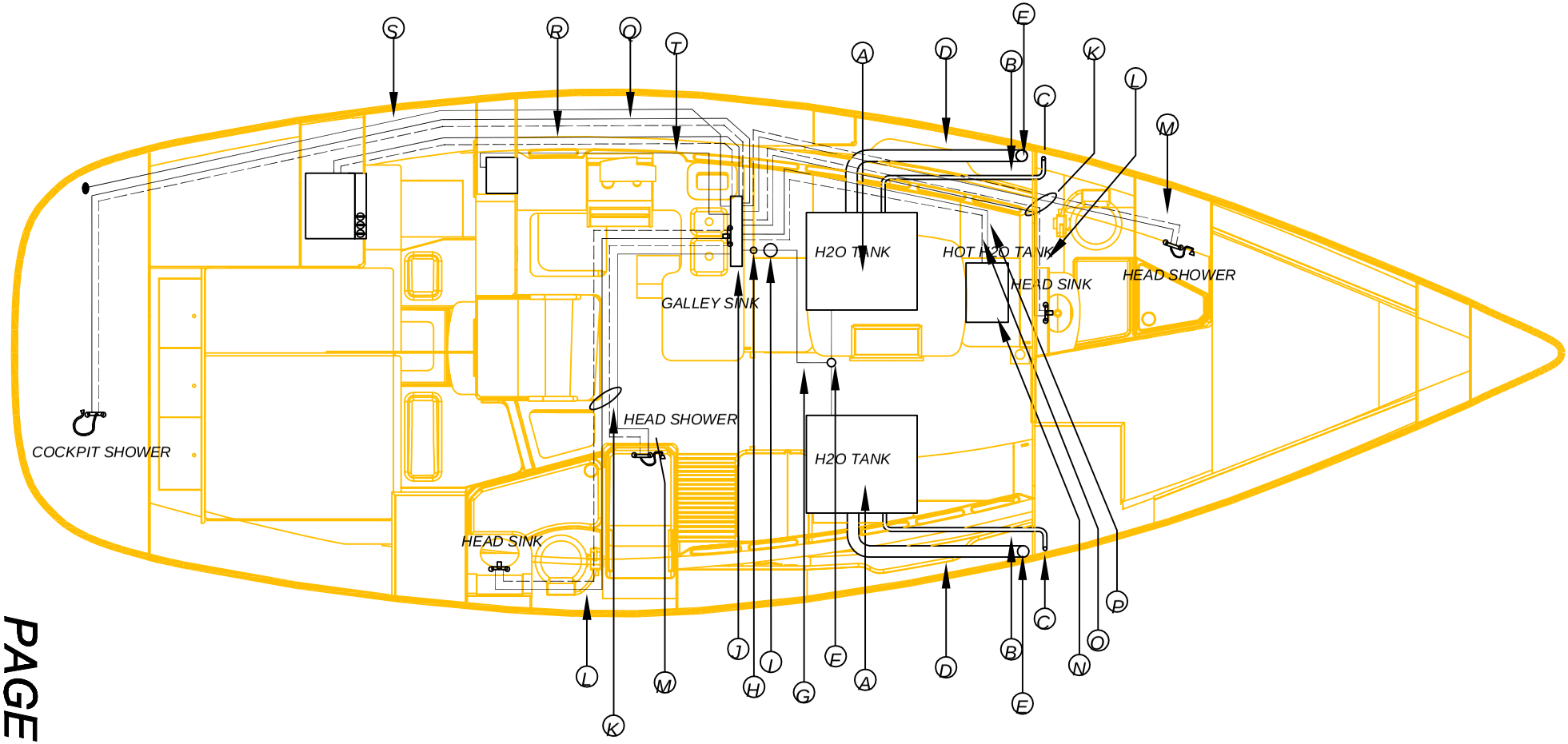

PAGE 57B

DRAWING TITLE: FRESH WATER SYSTEM LAYOUT	
DRAWING NO. 4268057B	REVISION NO. None
DRAWN BY: ENG	DATE: 07/11/02

This document discloses information for which HUNTER MARINE CORP. has proprietary rights.

HUNTER

WATER MANIFOLD SCHEMATIC
(LOCATED IN CABINET BENEATH GALLEY SINK)

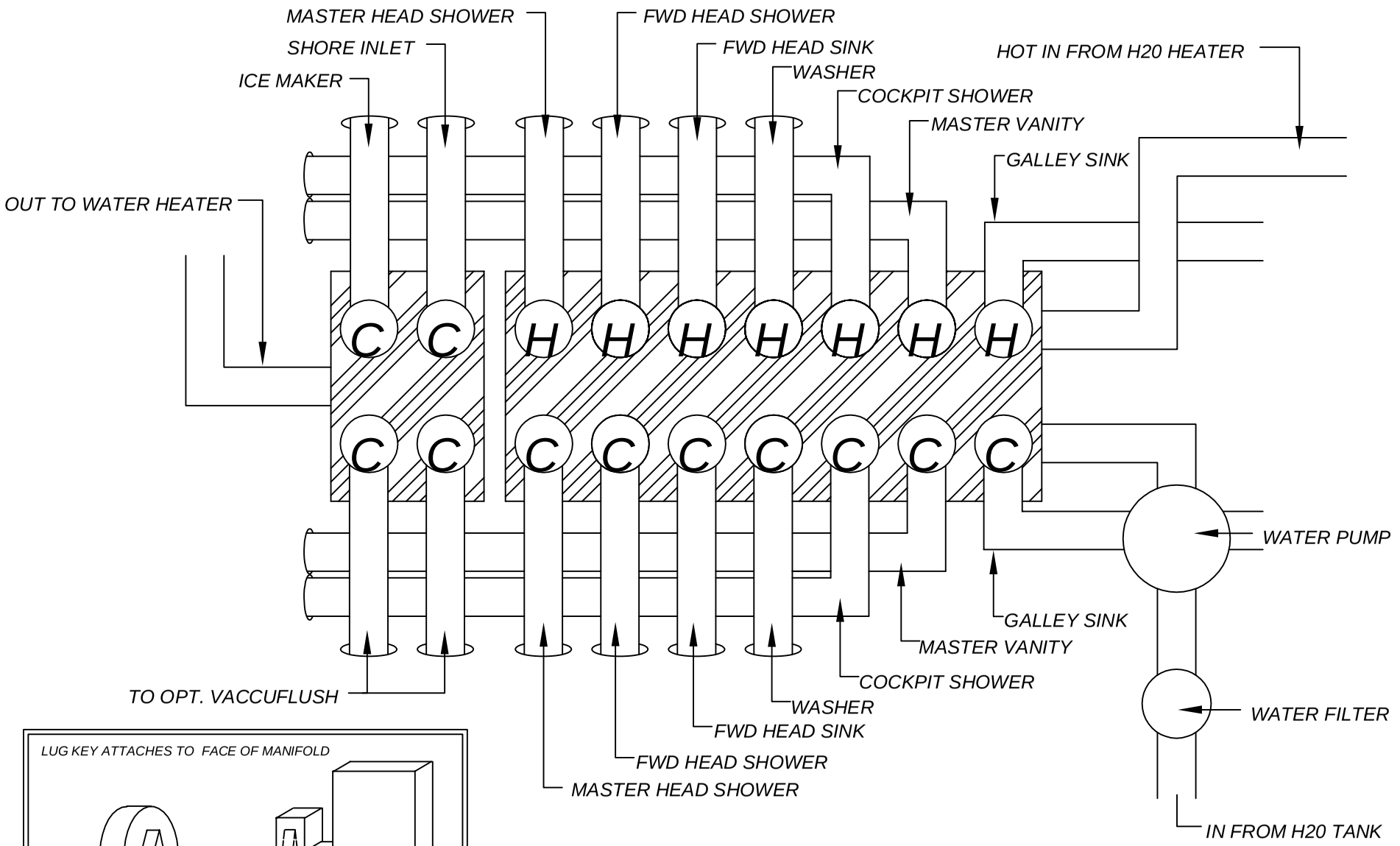

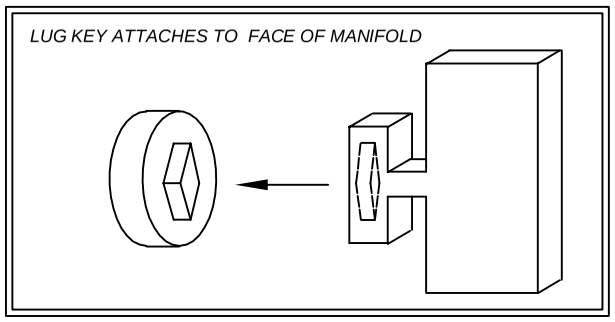

PAGE 57C

DRAWING TITLE: WATER MANIFOLD LAYOUT	
DRAWING NO. 4268057C	REVISION NO. None
DRAWN BY: ENG	DATE: 07/11/02

This document discloses information for which HUNTER MARINE CORP. has proprietary rights.

HUNTER

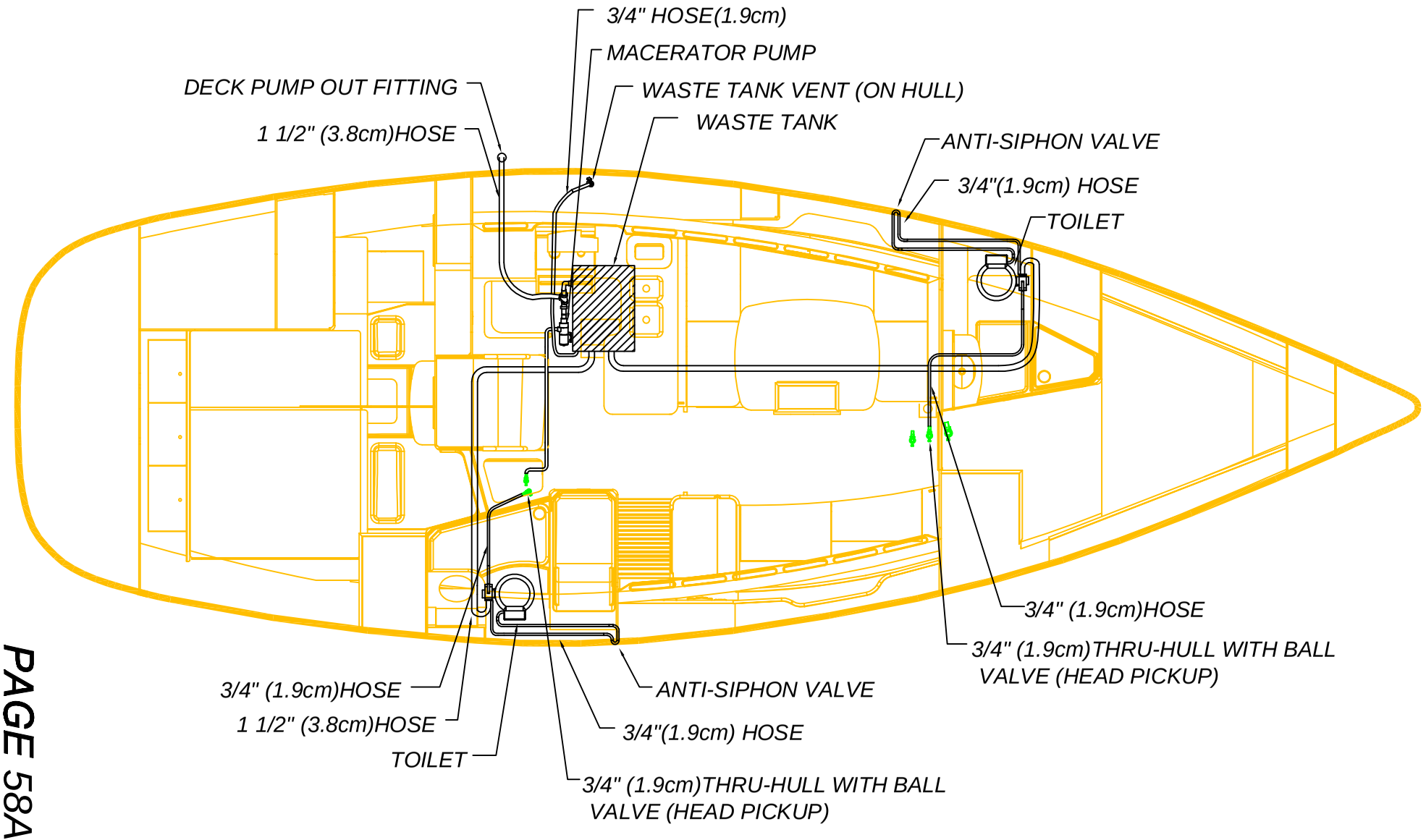

PAGE 58A-1

DRAWING TITLE: WASTE SYSTEM LAYOUT

DRAWING NO. 4268058A-1

REVISION NO. None

DRAWN BY:

DATE: 07/11/02

This document discloses information for which HUNTER MARINE CORP. has proprietary rights.

HUNTER

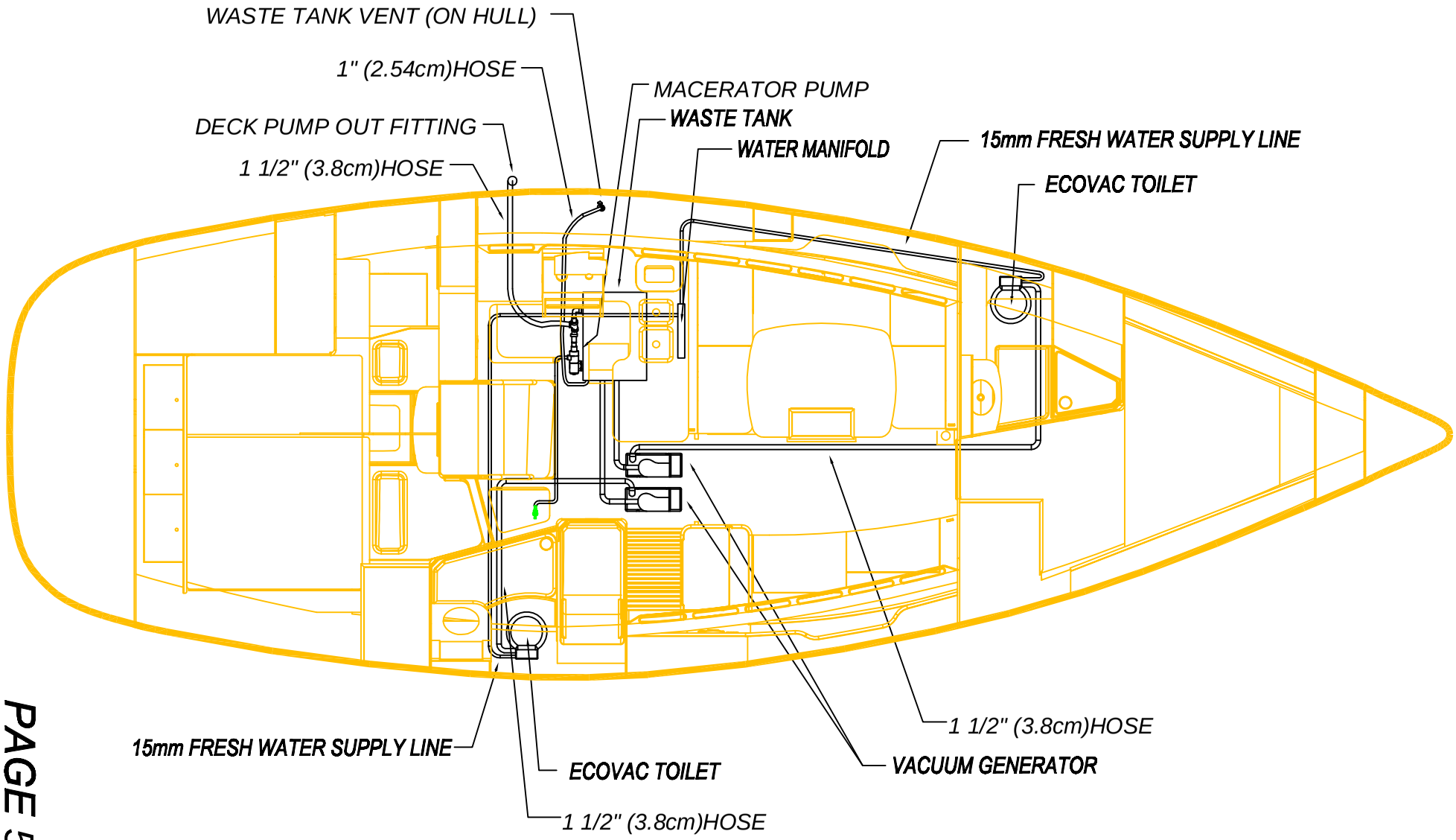

PAGE 58A-2

DRAWING TITLE: VACUUM TOILET SYSTEM

DRAWING NO.	REVISION NO.
4268058A-2	NONE
DRAWN BY: ENG	DATE: 6/18/01

This document discloses information for which HUNTER MARINE CORP. has proprietary rights.

HUNTER

NOTE: USE OF DIRECT OVERBOARD WASTE DISCHARGE SYSTEM IS FORBIDDEN IN MANY AREAS. PLEASE CONSULT LOCAL REGULATIONS BEORE USING IN COASTAL WATERS.

SEE PREVIOUS PAGES FOR DETAILS OF STANDARD WASTE SYSTEM

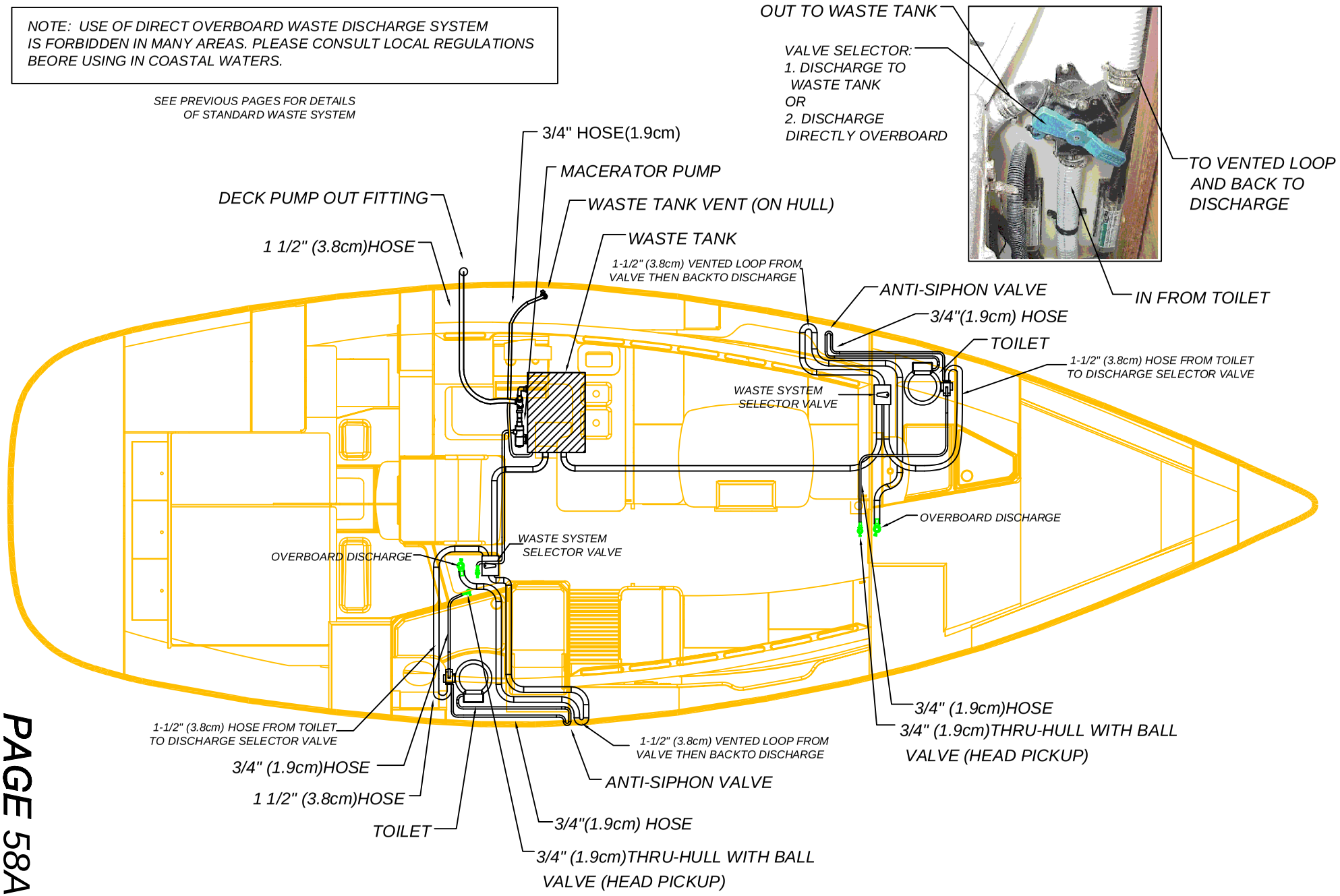

PAGE 58A-3

DRAWING TITLE: OPTIONAL OVERBOARD WASTE SYSTEM LAYOUT	
DRAWING NO. 4268058A-3	REVISION NO. None
DRAWN BY: NAME	DATE: 07/11/02

This document discloses information for which HUNTER MARINE CORP. has proprietary rights.

HUNTER

THE MACERATOR MOMENTARY SWITCH IS PROVIDED TO PROHIBIT THE "DRY RUNNING" OF THE MACERATOR. TO OPERATE THE MACERATOR, TURN THE MACERATOR BREAKER TO THE "ON" POSITION. WHILE EITHER WATCHING THE WASTE TANK LEVEL INDICATOR, OR LISTENING TO THE PITCH OF THE PUMP, PUSH THE MOMENTARY SWITCH IN. THIS WILL ACTIVATE THE MACERATOR. ONCE THE TANK LEVEL INDICATOR REACHES "EMPTY", OR THE PITCH CHANGES NOTICABLY, RELEASE THE MOMENTARY SWITCH AND TURN THE BREAKER TO THE "OFF" POSITION. NOTE: OCCASIONALLY THE TANK SENDING UNIT BECOMES NON FUNCTIONAL, THEREFORE IT IS MORE EFFECTIVE AND SAFER FOR THE PUMP IF THE OPERATOR USES THE "LISTENING" METHOD TO DETERMINE IF THE TANK HAS BEEN EMPTIED.

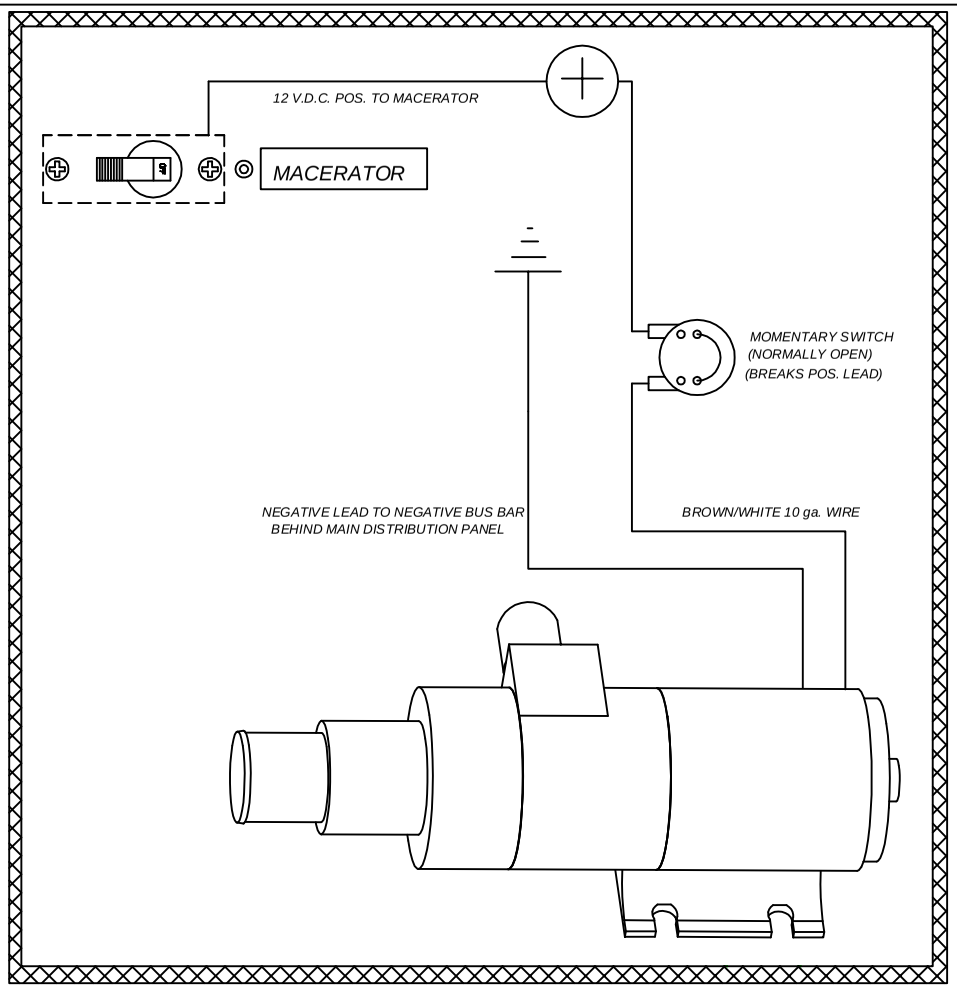

MACERATOR SCHEMATIC
TYPICAL

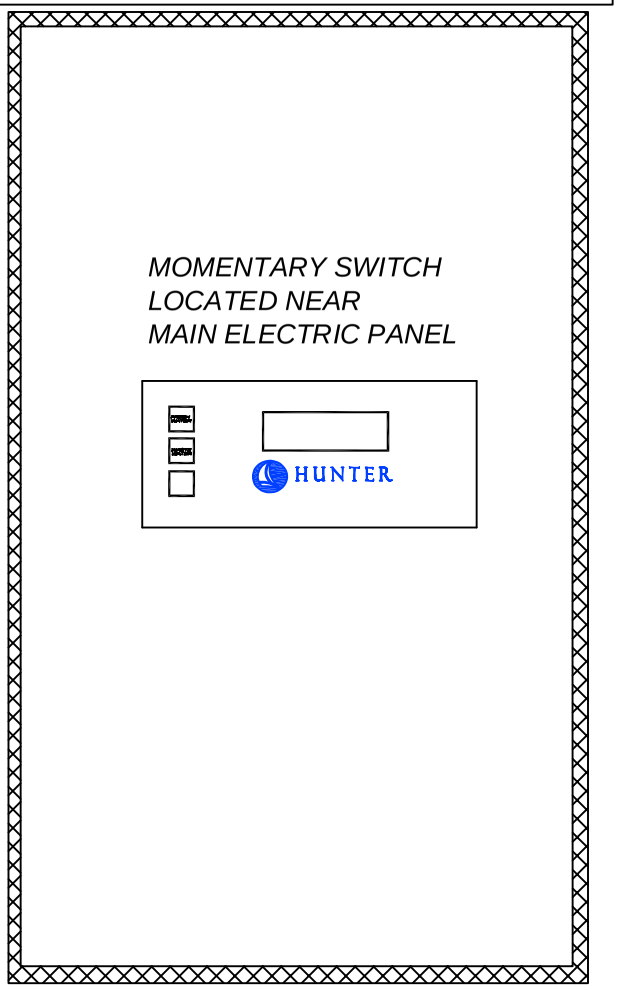

MOMENTARY SWITCH LOCATION

PAGE 58B

DRAWING TITLE: MACERATOR SCHEMATIC	
DRAWING NO. 4268058B	REVISION NO. None
DRAWN BY: ENG	DATE: 08/15/02

This document discloses information for which HUNTER MARINE CORP. has proprietary rights.

HUNTER

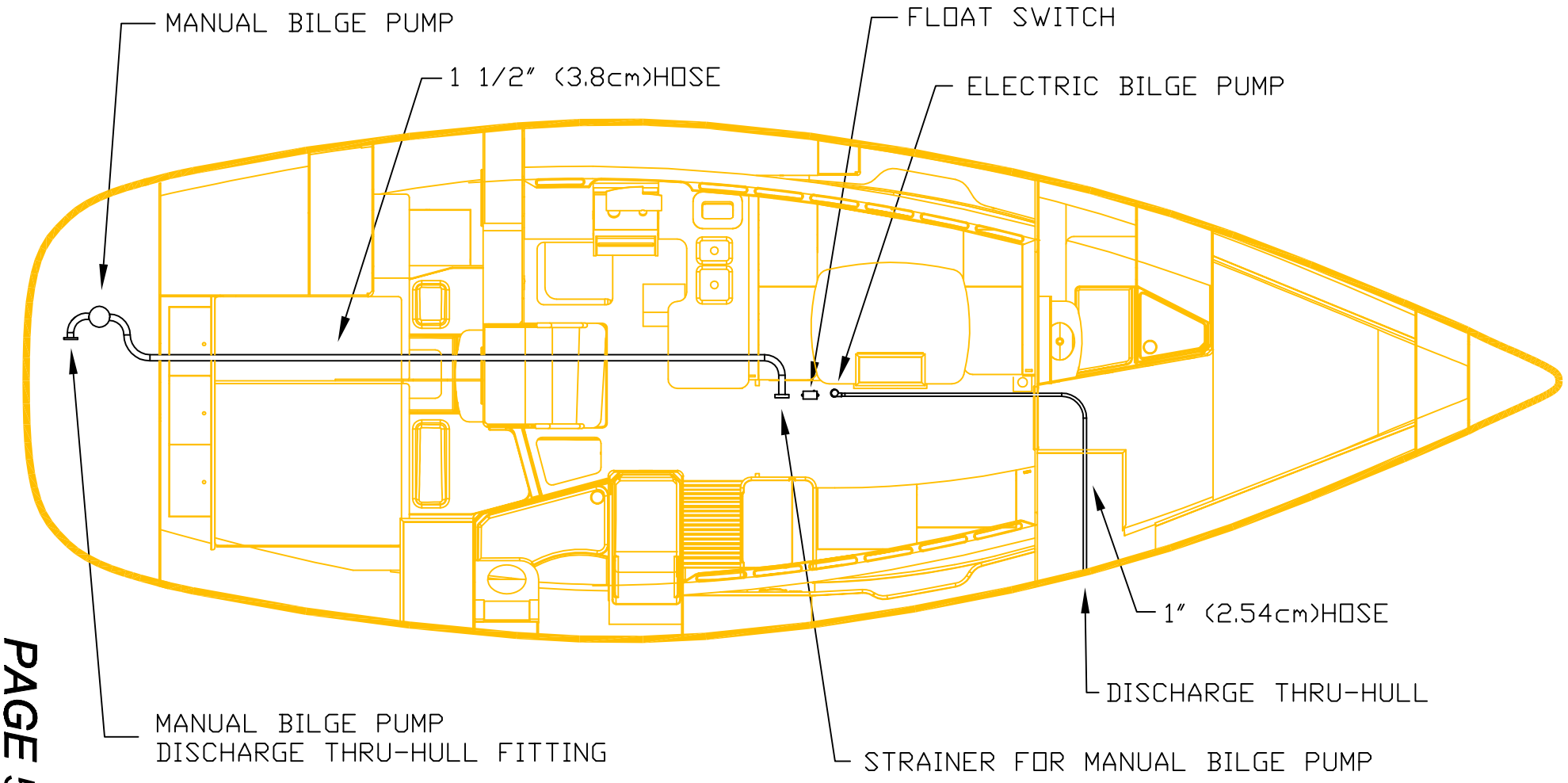

PAGE 59A

DRAWING TITLE: BILGE PUMP LAYOUT

DRAWING NO.	REVISION NO.
4268059A	None
DRAWN BY:	DATE:
ENG	07/11/02

This document discloses information for which HUNTER MARINE CORP. has proprietary rights.

HUNTER

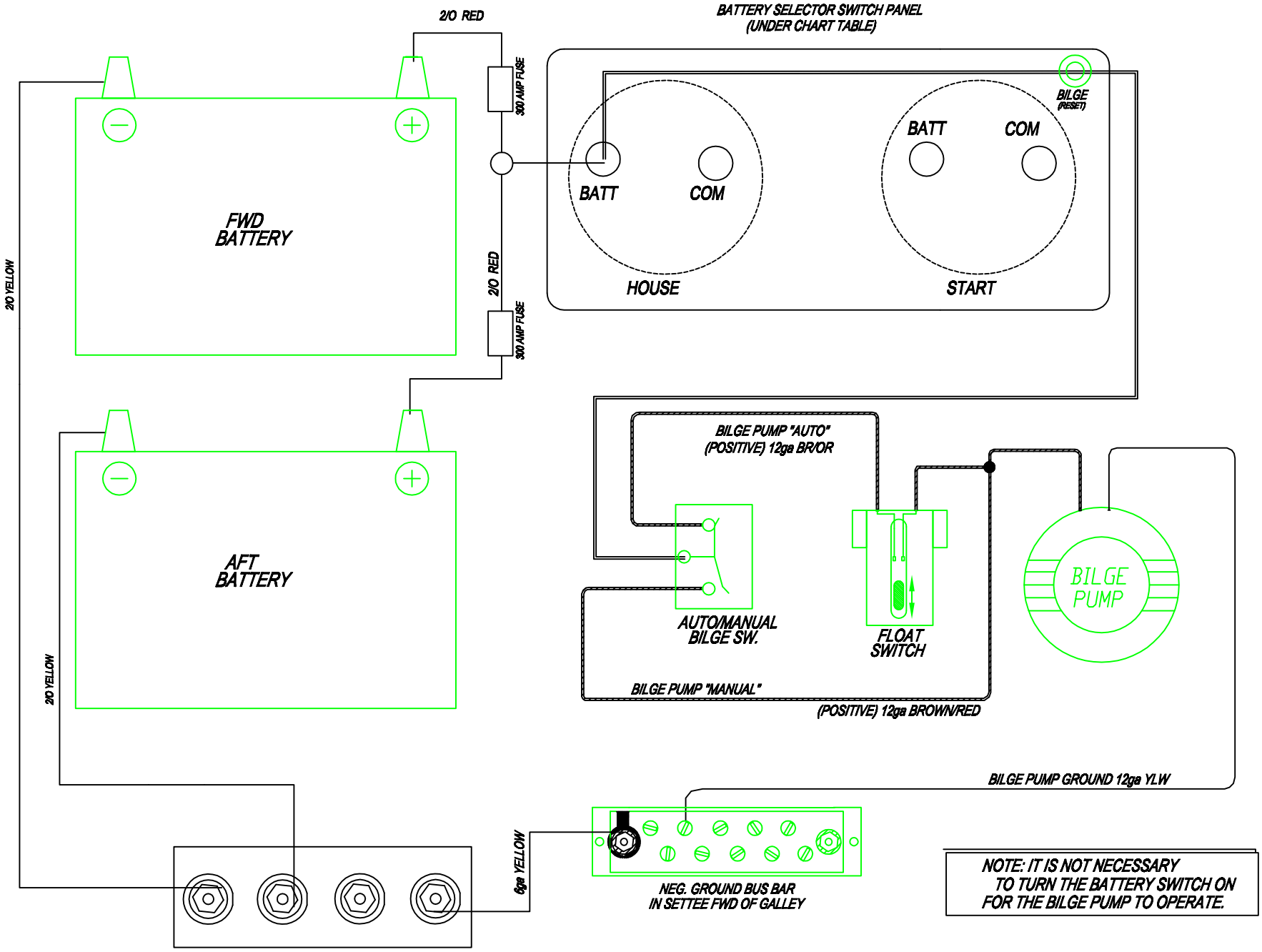

PAGE 59B

DRAWING TITLE: ELECTRIC BILGE PUMP SCHEMATIC

DRAWING NO. 4268059B | REVISION NO. NONE

DRAWN BY: ENG | DATE:

This document discloses information for which HUNTER MARINE CORP. has proprietary rights.

HUNTER

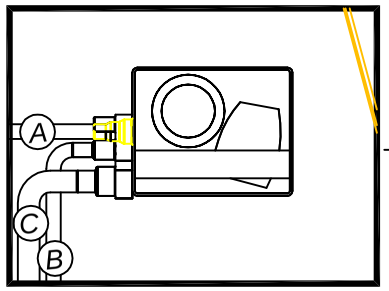

DETAIL OF AFT SUMP PUMP COMPARTMENT

A OUT TO THRU HULL DISCHARGE
B IN FROM VANITY FLOOR
C IN FROM SHOWER

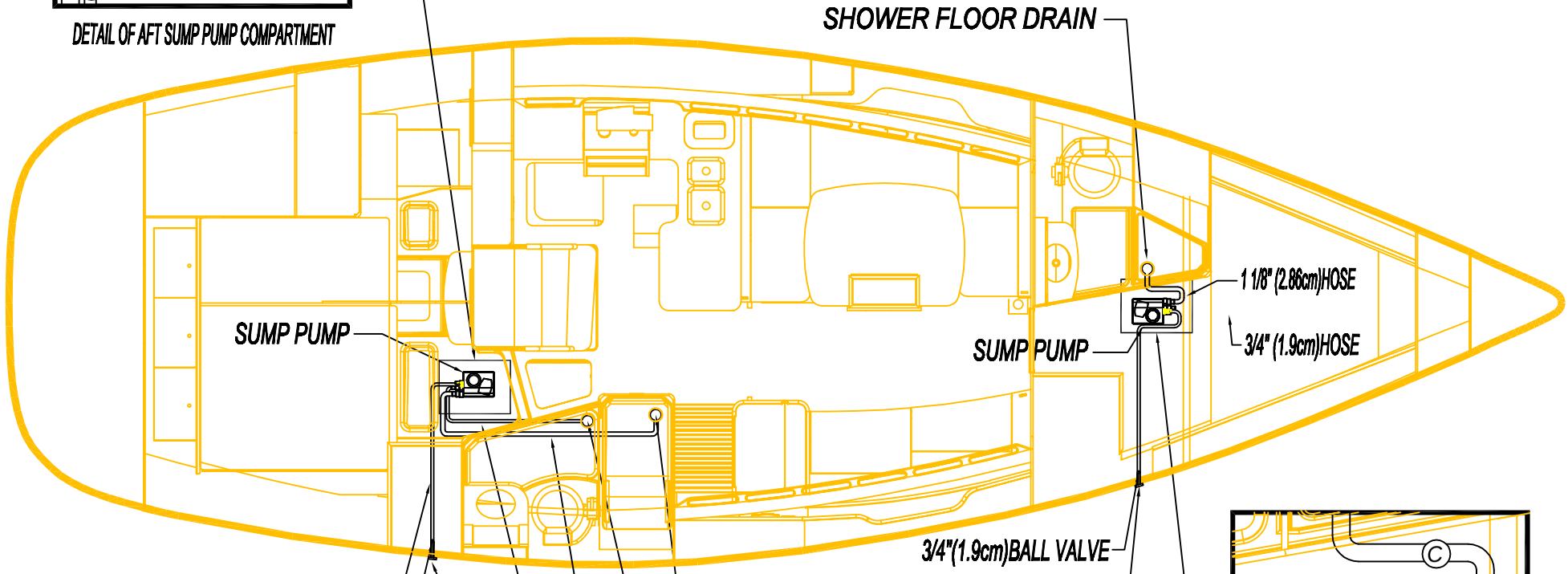

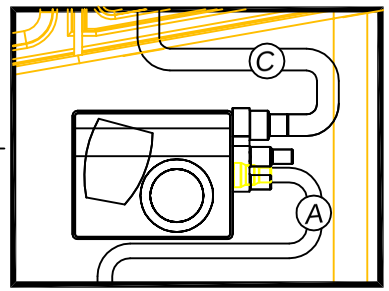

DETAIL OF FWD SUMP PUMP COMPARTMENT

PAGE 59C

DRAWING TITLE: SUMP PUMP SYSTEM LAYOUT

DRAWING NO.	REVISION NO.
4268059C	NONE
DRAWN BY: ENG	DATE: 6/18/01

This document discloses information for which HUNTER MARINE CORP. has proprietary rights.

HUNTER

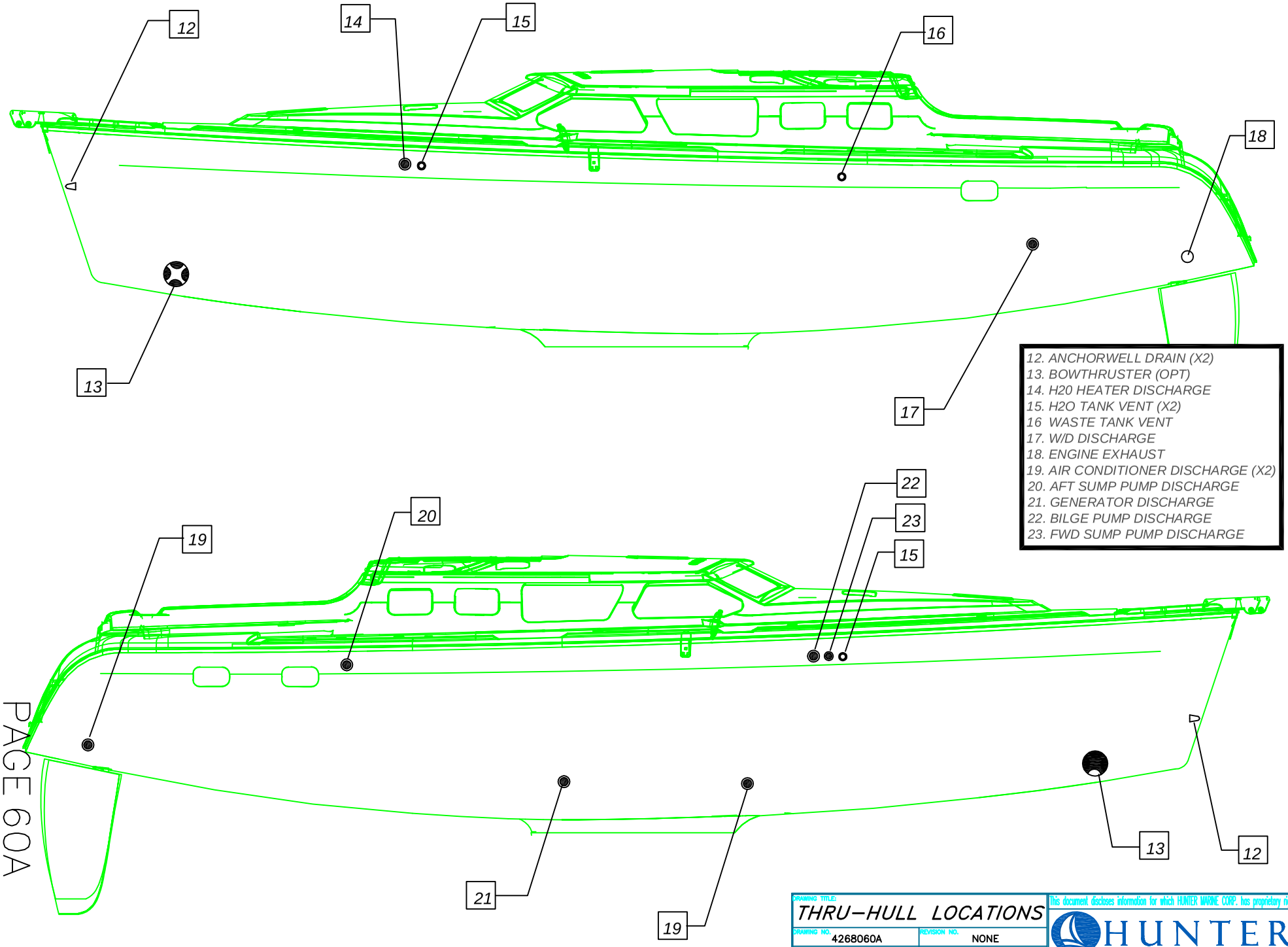

12. ANCHORWELL DRAIN (X2)
13. BOWTHRUSTER (OPT)
14. H20 HEATER DISCHARGE
15. H2O TANK VENT (X2)
16 WASTE TANK VENT
17. W/D DISCHARGE
18. ENGINE EXHAUST
19. AIR CONDITIONER DISCHARGE (X2)
20. AFT SUMP PUMP DISCHARGE
21. GENERATOR DISCHARGE
22. BILGE PUMP DISCHARGE
23. FWD SUMP PUMP DISCHARGE

PAGE 60A

DRAWING TITLE: THRU-HULL LOCATIONS

DRAWING NO.	REVISION NO.
4268060A	NONE
DRAWN BY: MAG	DATE: 6/18/01

This document discloses information for which HUNTER MARINE CORP. has proprietary rights.

HUNTER

1. AFT VANITY DISCHARGE
2. MACERATOR DISCHARGE
3. GALLEY DRAIN DISCHARGE
4. ENGINE PICKUP
5. GENERATOR PICKUP
6. AIR COND PICKUP
7. DEPTH READER
8. KNOT METER
9. VANITY DISCHARGE

Various combinations of options are possible. This drawing illustrates a potential combination of options, including the air conditioning system and generator. See the following page for an example of another possible combination including the overboard waste discharge and the toilet water pickup.

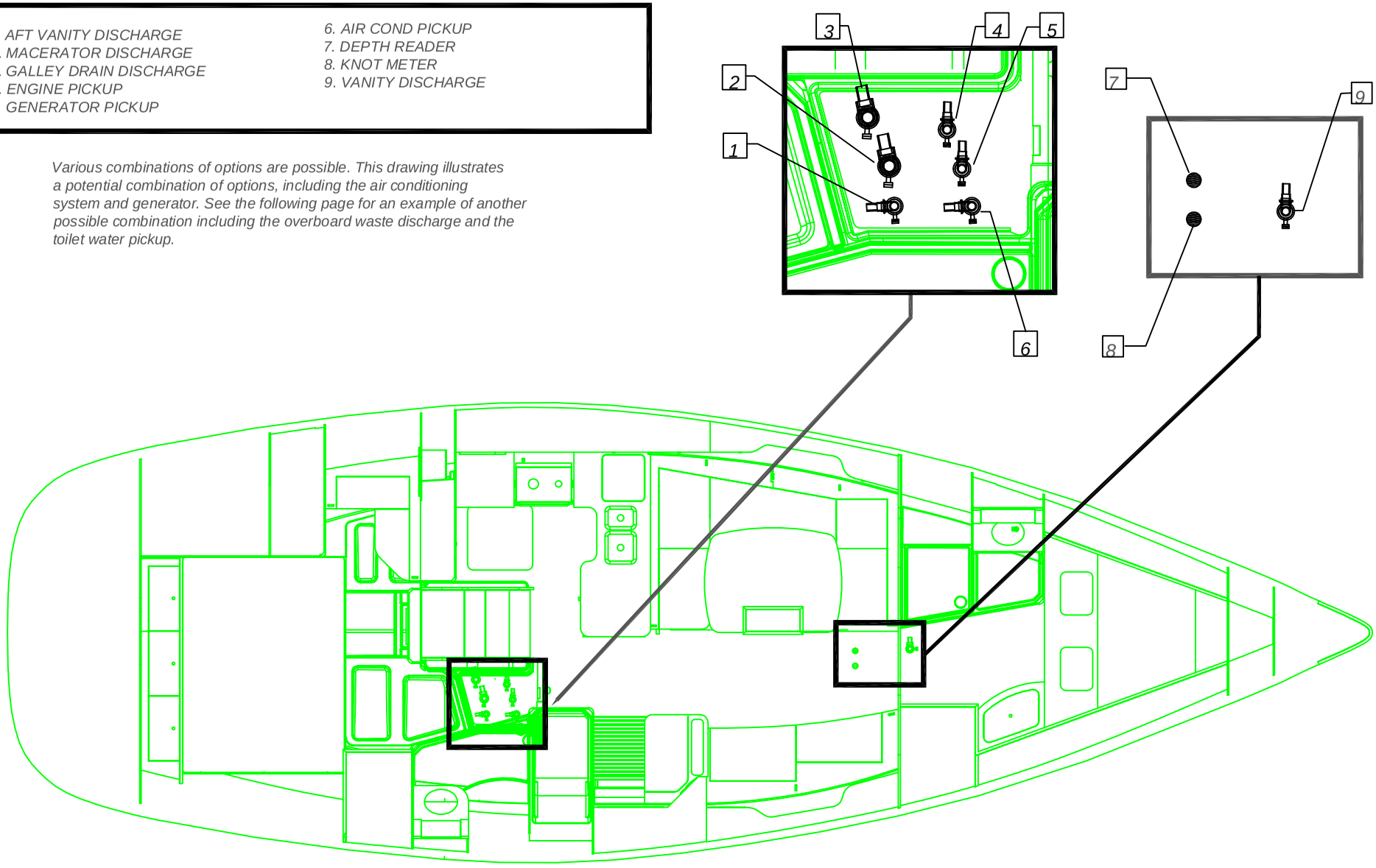

DRAWING TITLE: THRU–HULL LOCATIONS	
DRAWING NO. 4268060A–1	REVISION NO. NONE
DRAWN BY: MAG	DATE: 6/18/01

This document discloses information for which HUNTER MARINE CORP. has proprietary rights.

HUNTER

1. AFT VANITY SINK DRAIN
2. OVERBOARD WASTE DISCHARGE
3. GALLEY DRAIN
4. ENGINE PICKUP
5. MACERATOR DISCHARGE
6. AFT HEAD PICKUP
7. FWD VANITY SINK DRAIN
8. FWD HEAD PICKUP
9. OVERBOARD WASTE DISCHARGE

Various combinations of options are possible. This drawing illustrates a potential combination of options, including the overboard waste discharge and the toilet water pickup. See the following page for an example of another possible combination including the air conditioner and generator water pickups.

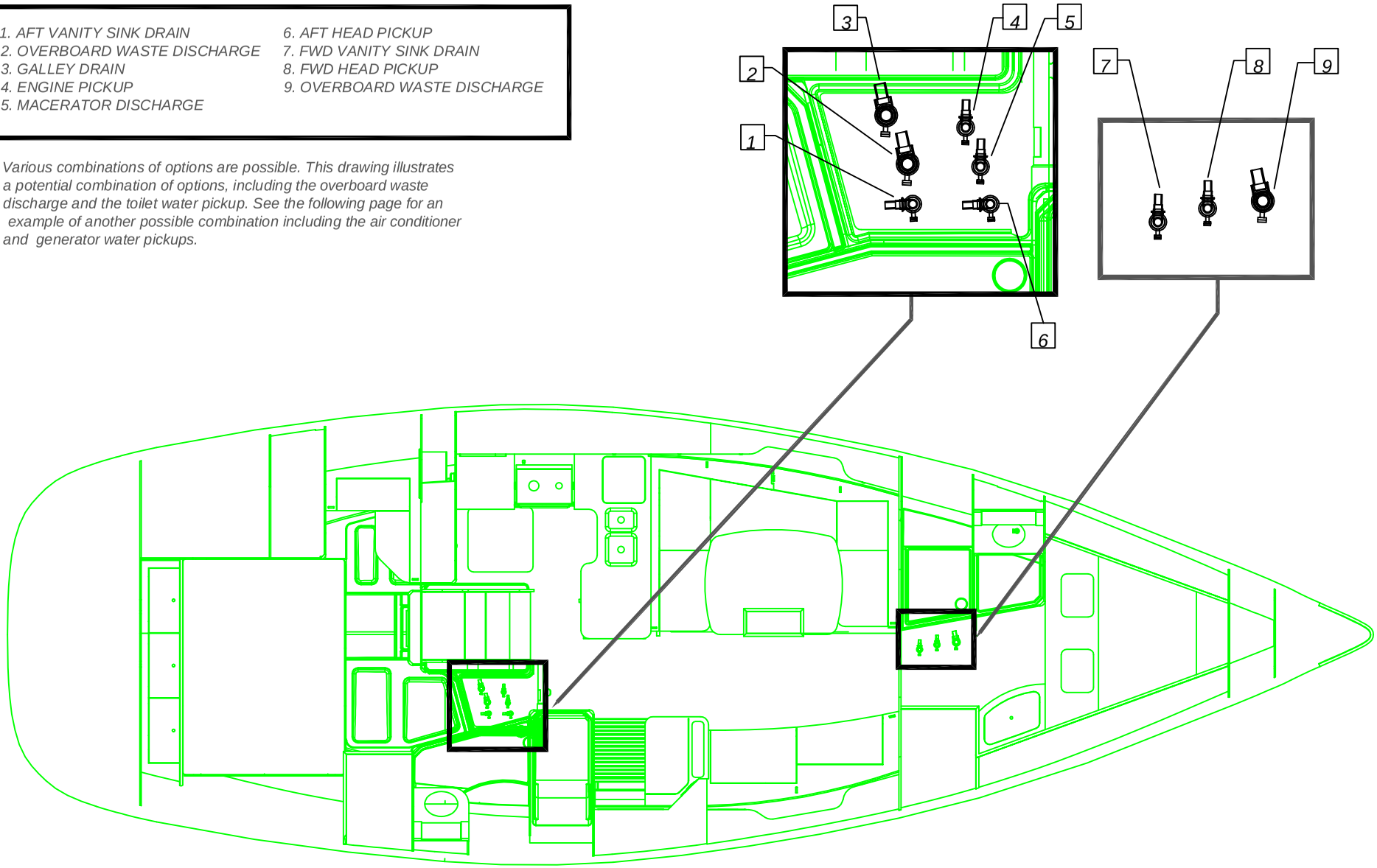

PAGE 60A–2

DRAWING TITLE: THRU–HULL LOCATIONS	
DRAWING NO. 4268060A–2	REVISION NO. NONE
DRAWN BY: MAG	DATE: 6/18/01

This document discloses information for which HUNTER MARINE CORP. has proprietary rights.

HUNTER

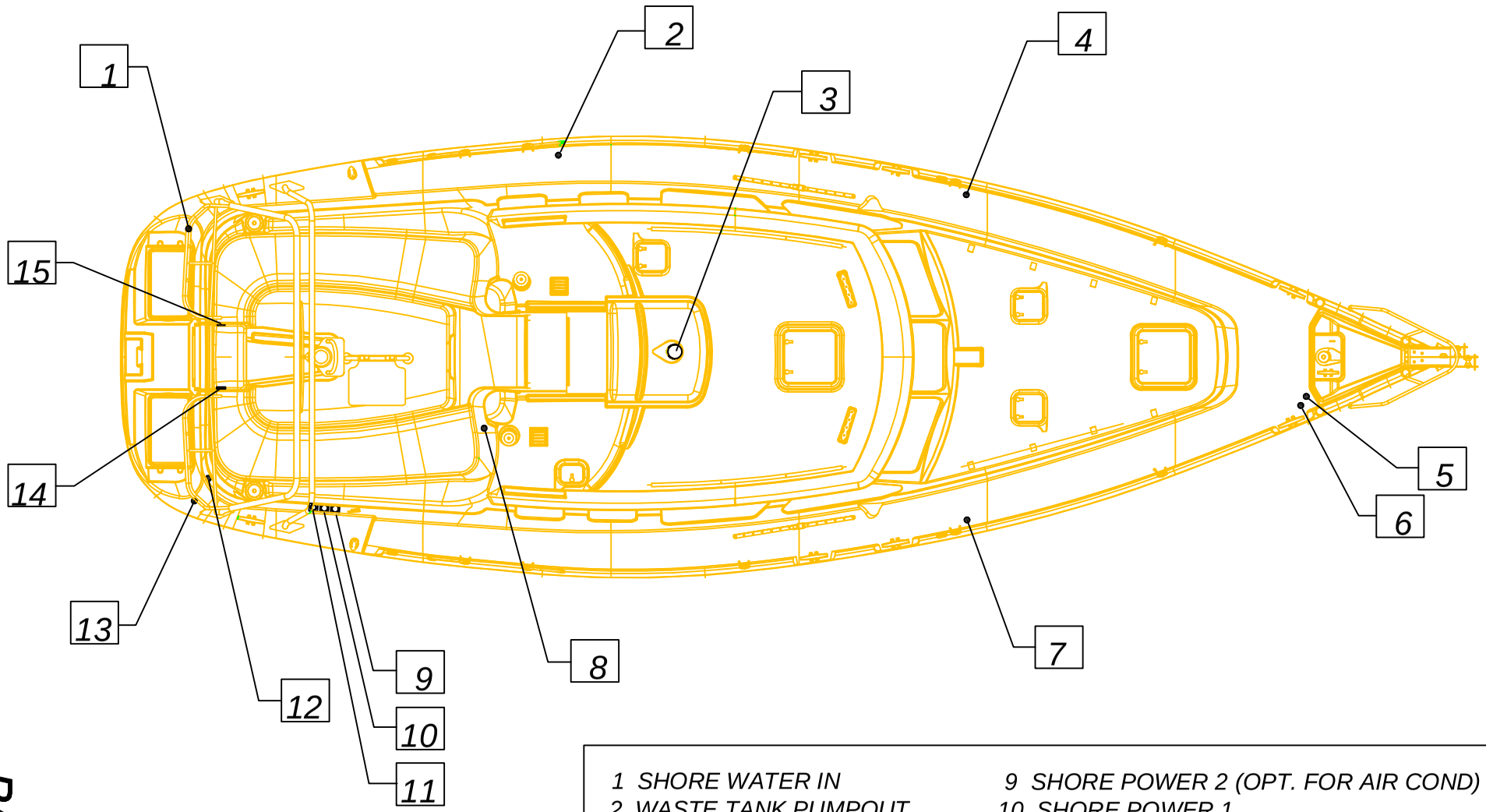

1 SHORE WATER IN
2 WASTE TANK PUMPOUT
3 DORADE VENT
4 PORT WATER TANK FILL
5 WINDLASS UP SWITCH
6 WINDLASS DOWN SWITCH
7 STBD WATER TANK FILL
8 ELECTRIC HALYARD
9 SHORE POWER 2 (OPT. FOR AIR COND)
10 SHORE POWER 1
11 TELEVISION/TELEPHONE CONNECTIONS
12 FUEL TANK VENT
13 FUEL TANK FILL
14 COCKPIT SHOWER
15 MANUAL BILGE PUMP

DRAWING TITLE: H426 THRU-DECK LOCATIONS
DRAWING NO.: 4268060B
REVISION NO.: NONE
DRAWN BY: ENG
DATE: 6/18/01

This document discloses information for which HUNTER MARINE CORP. has proprietary rights.

HUNTER

This document discloses information for which HUNTER MARINE CORP. has proprietary rights

HUNTER

DRAWING TITLE: TYPICAL THRU DECK/THRU HULL FITTINGS

DRAWING NO. 4268060C | REVISION NO. NONE | DRAWN BY: FMC | DATE:

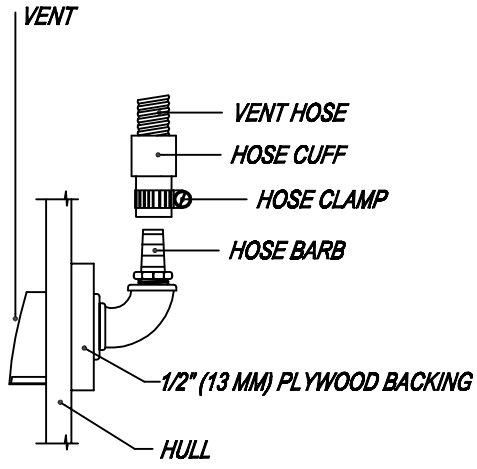

TYP. VENT DETAIL

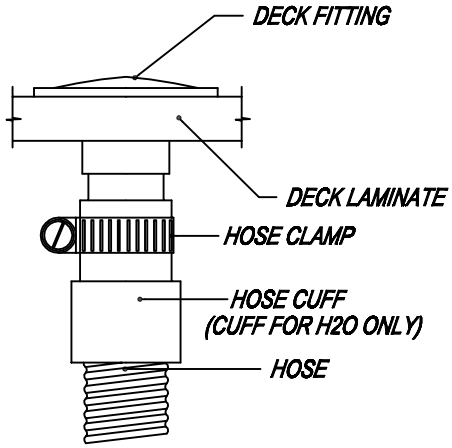

TYP DECK PLATE DETAIL

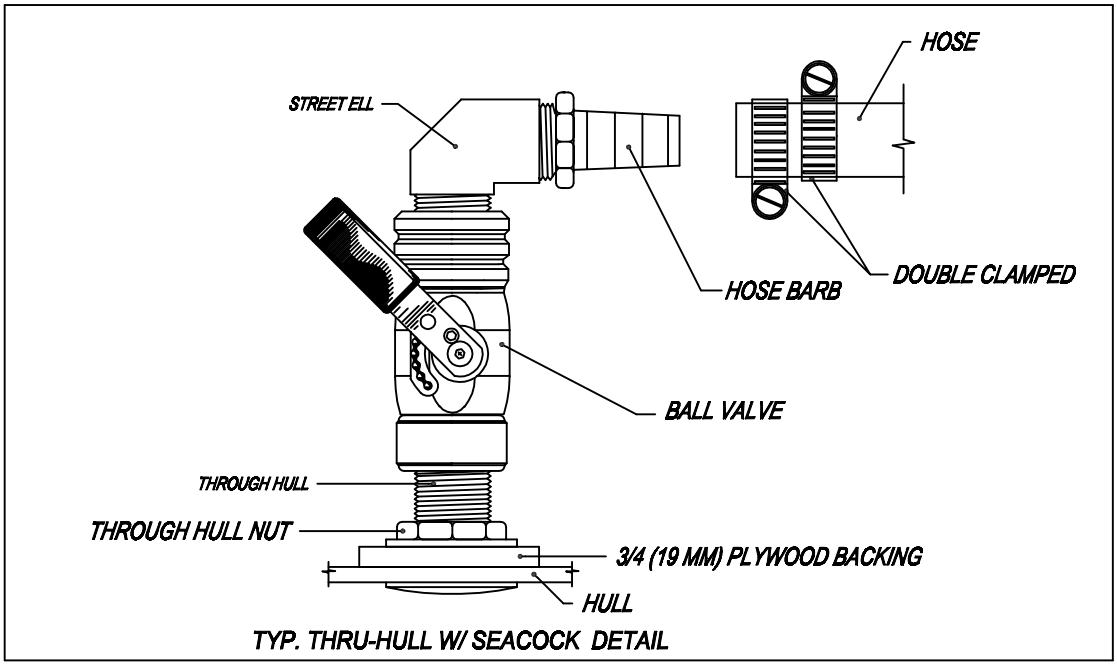

TYP. THRU-HULL W/ SEACOCK DETAIL

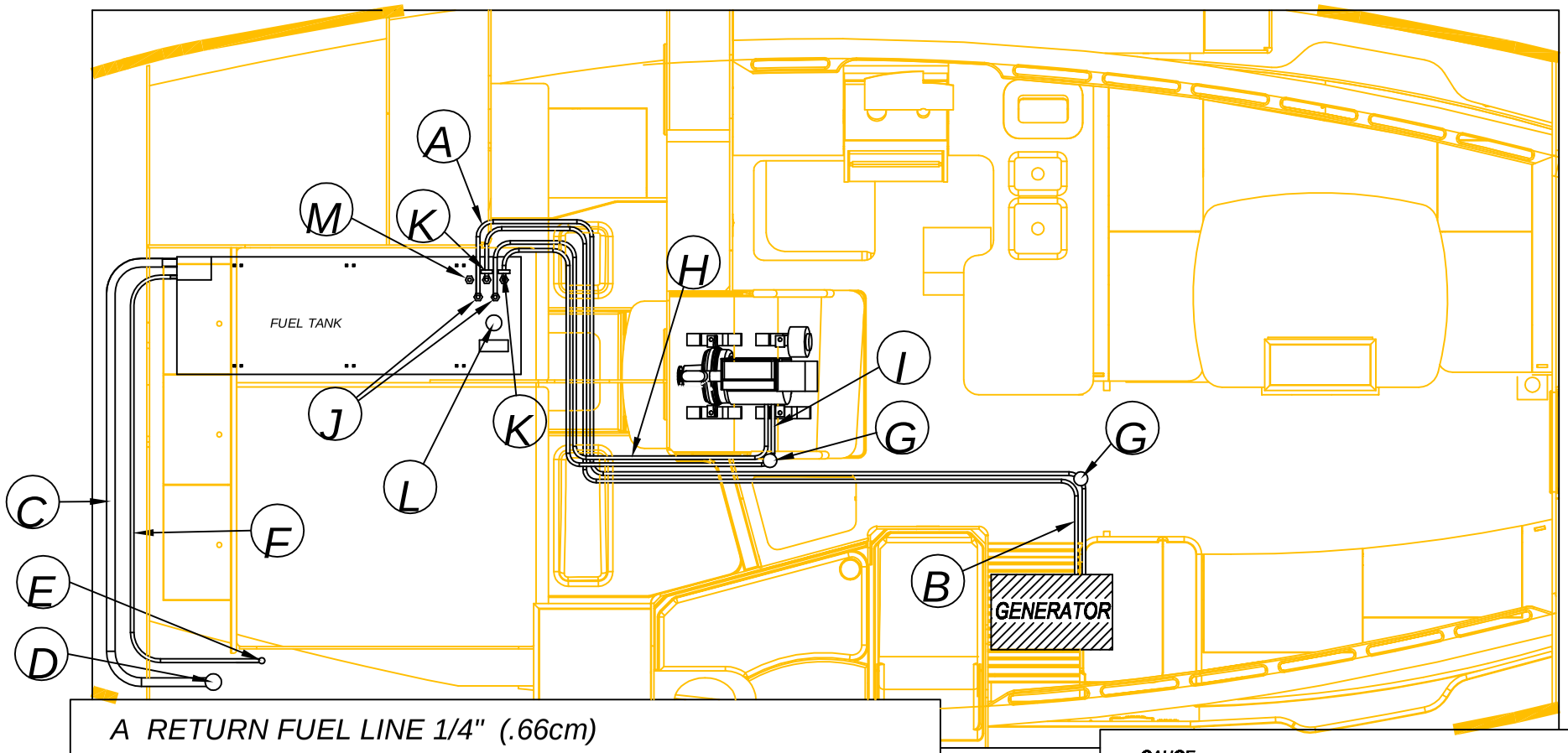

A RETURN FUEL LINE 1/4" (.66cm)
B GENERATOR FUEL SUPPLY LINE 1/4" (.66cm)
C FUEL FILL HOSE 1-1/2" (3.8cm)
D FUEL FILL (ON DECK)
E FUEL VENT (ON DECK)
F FUEL VENT HOSE 5/8" (1.6cm)
G FUEL FILTER/WATER SEPARATOR
H FUEL RETURN LINE 1/4" (.66cm)
I ENGINE FUEL SUPPLY LINE 1/4" (.66cm)
J ENGINE AND GENERATOR FUEL RETURN PORTS
K FUEL CUTOFF VALVES
L FUEL LEVEL SENSOR
M OPTIONAL HEATER FUEL SUPPLY LINE

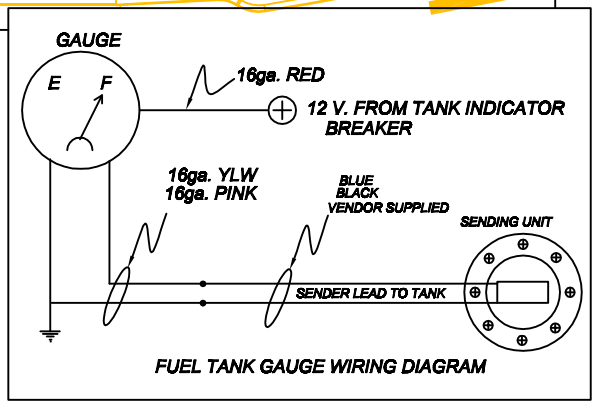

FUEL TANK GAUGE WIRING DIAGRAM

DRAWING TITLE: FUEL SYSTEM LAYOUT
DRAWING NO. 4268061
REVISION NO. NONE
DRAWN BY: ENG
DATE: 07/15/02

This document discloses information for which HUNTER MARINE CORP. has proprietary rights.

HUNTER

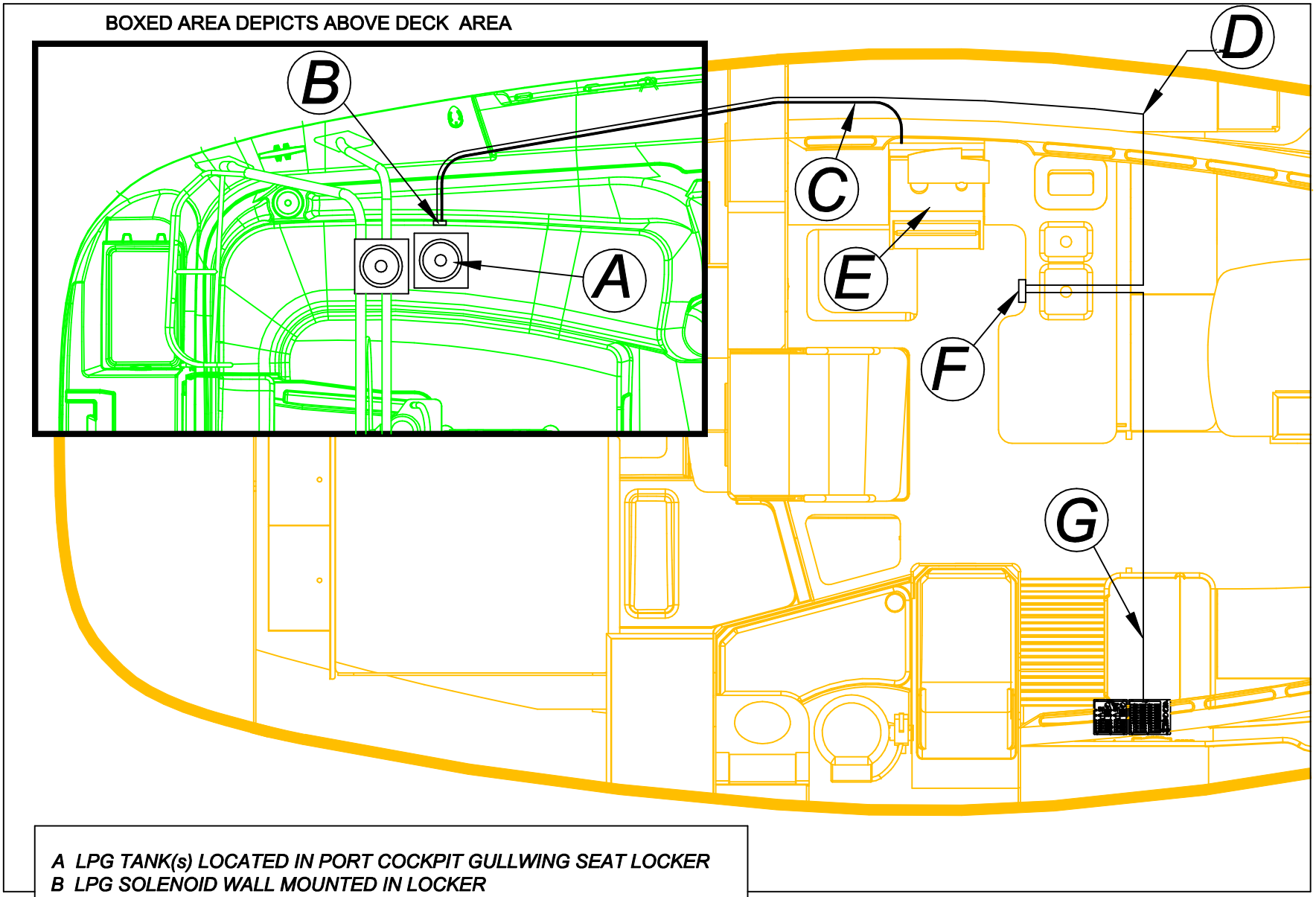

A LPG TANK(s) LOCATED IN PORT COCKPIT GULLWING SEAT LOCKER
B LPG SOLENOID WALL MOUNTED IN LOCKER
C RUBBER GAS LINE HOSE (COPPER IN CERTAIN REGIONS)
D POWER LINE FROM LPG CONTROL SWITCH
E GIMBALLED STOVE
F REMOTE CONTROL SHUT-OFF LOCATED IN GALLEY FACE
G POWER FROM MAIN ELECTRIC PANEL TO REMOTE SWITCH

DRAWING TITLE: LPG LINES LAYOUT

DRAWING NO.	REVISION NO.
4268062A	NONE
DRAWN BY: ENG	DATE: 7/16/02

This document discloses information for which HUNTER MARINE CORP. has proprietary rights.

HUNTER

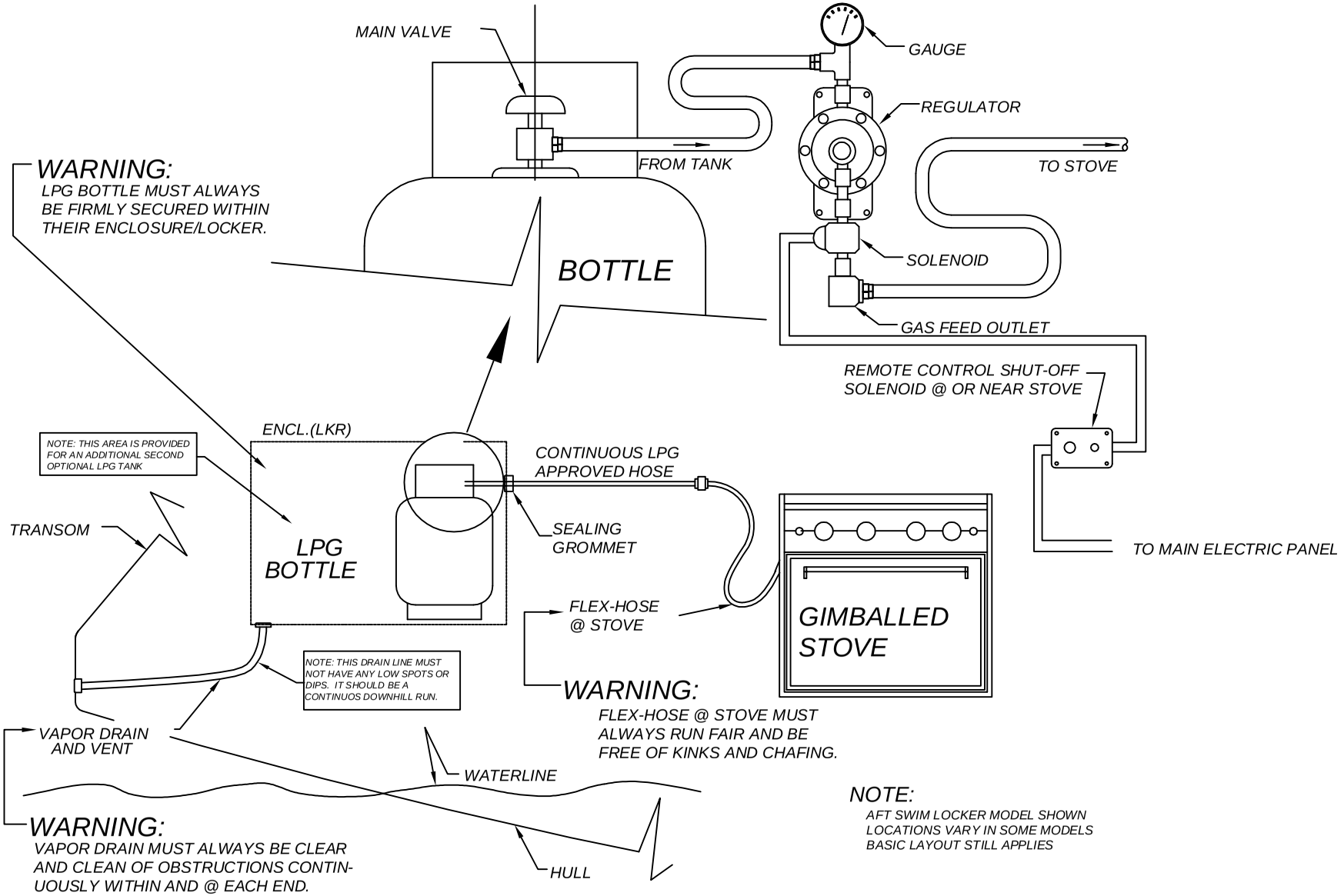

PAGE 62B

DRAWING TITLE: LPG SYSTEM SCHEMATIC

DRAWING NO.	REVISION NO.
4268062B	NONE
DRAWN BY: ENG	DATE:

This document discloses information for which HUNTER MARINE CORP. has proprietary rights.

HUNTER

NOTE TO CONSUMER

THE FOLLOWING PAGES PROVIDE DETAILED INFORMATION, SCHEMATICS ETC. PERTAINING TO THE H426 **STANDARD** ELECTRICAL SYSTEMS AS WELL AS THE **OPTIONAL** ELECTRICAL SYSTEMS.

BE SURE TO READ THE DRAWING TITLE IN THE TITLE BLOCK TO BE SURE YOU ARE REFERRING TO THE CORRECT SYSTEM FOR YOUR MODEL.

MAJOR DIFFERENCES EXIST FOR EXAMPLE IN THE CHARGING SYSTEM SCHEMATICS WHERE THE STANDARD MODEL IS EQUIPPED WITH A BATTERY CHARGER AND THE OPTIONAL MODEL IS EQUIPPED WITH AN INVERTER/CHARGER.

ELECTRICAL INFORMATION FOR PLUMBING SYSTEMS IS IN PLUMBING SECTION.

H426 ELECTRICAL SYSTEM CONTENTS

PAGES 63A-10 THRU 63B-4 CONTAINS A.C. POWER SYSTEMS
(120 V.A.C.) (220 V.A.C. ON OVERSEAS MODELS)

BASIC POWER SYSTEMS / MAIN DIST. PANEL DESCRIPTION …….. PAGES 63A-2 THRU 63A7

POWER SYSTEMS TROUBLESHOOTING GUIDE …….. 63A-8 THU 63A-11

A.C. POWER WIRING……..……..63A-12

A.C. POWER WIRING SCHEMATIC (SEE CHARGING SYSTEM SCHEMATIC)…… 63C-2 & C-3

WATTAGE DEMANDS ……..…… 63A-13

OPTIONAL AIR CONDITIONING SYSTEM ……..……..… 63B-1 THRU B-4

CHARGING SYSTEM……...……63C-1 THRU C-3

PAGES 64A-1 THRU 64J CONTAINS D.C. POWER SYSTEMS
(12 VOLT D.C.)

D.C. PANEL SCHEMATIC…… ……..…….. 64A

12 VOLT LIGHTING / SPEAKERS / STEREO/VHF ……..…..……..64B THRU 64F

REFRIGERATION SYSTEM ……...……64G-1

OPTIONAL WINDLASS …… 64H-1 THRU 64H-3

OPTIONAL ELECTRIC HALYARD ……..…… 64I-1 & 64I-2

OPTIONAL AUTOPILOT …….. 64J

AUTOMATIC FIRE EXTINGUISHER……..…….64K

ELECTRIC WIRING COLOR / GAUGE CHART……PAGE 65A-1 & 65A-2

H426 POWER SYSTEMS OPERATION PROCEDURES

POWER SOURCE:	TO OPERATE:
D.C. MAIN	**STD. BATTERY CHARGER MODEL**: TURN BATTERY SWITCH (LOCATED UNDER CHART TABLE) TO THE "ON" POSITION, THEN TURN ON "D.C. MAIN" BREAKER. ON D.C. SIDE OF MAIN DISTRIBUTION PANEL. **IF NO POWER:** CHECK 50amp RESET ON "HOUSE" BATTERY SWITCH PANEL AND/OR BATTERY CONNECTIONS IF NECESSARY.
D.C. MAIN	**OPTIONAL INVERTER MODEL**: TURN ON "D.C. MAIN" BRKR. ON D.C. SIDE OF MAIN DISTRIBUTION PANEL. IT IS **NOT** NECESSARY TO TURN ON THE HOUSE BATTERY ON/OFF SW. TO THE "ON" POSITION, **THIS PORTION OF THE HOUSE BATTERY ON/OFF SW. IS FOR THE CHARGING/INVERTING SYSTEM (AND ISOLATION OF) ONLY**. IT **IS** NECES. HOWEVER TO TURN ON EITHER THE HOUSE BATTERY BREAKER LOCATED ON THE BOTTOM OF THE HSE. BATTERY ON/OFF SW. PANEL TO PROVIDE POWER TO D.C. PANEL FROM THE HOUSE BATT. (#1=HOUSE BATTERY #1) **IF NO POWER: CHECK 300 amp IN LINE FUSE AT HOUSE BATTERY IN HOUSE BATTERY COMPARTMENT, AND/OR BATTERY CONNECTIONS IF NECESSARY.**
SHORE POWER "A"	1. CONNECT SHORE POWER CABLE #1, TO SUPPLY POWER TO "A" SIDE OF A.C. POWER MAIN DISTRIBUTION PANEL 2. TURN ON MAIN BREAKER ON SHORE POWER "A" SIDE OF PANEL 3. "A" SIDE OF A.C. POWER MAIN DISTRIBUTION PANEL SHOULD NOW BE OPERABLE (NOTE: APPROX. 15 SECOND DELAY ON OPT. INV. MODELS) **IF NO POWER TO "A" SIDE OF PANEL CHECK THE FOLLOWING:** **1. BREAKER AT DOCKSIDE POWER SUPPLY BOX** **2. BREAKER #1 IN STBD Q-BERTH HEADLINER**
SHORE POWER "B"	1. CONNECT SHORE POWER CABLE #2, TO SUPPLY POWER TO "B" SIDE OF A.C. POWER MAIN DISTRIBUTION PANEL 2. TURN ON MAIN BREAKER ON SHORE POWER "B" SIDE OF PANEL 3. "B" SIDE OF A.C. POWER MAIN DISTRIBUTION PANEL SHOULD NOW BE OPERABLE **IF NO POWER TO "B" SIDE OF PANEL CHECK THE FOLLOWING:** **1. BREAKER AT DOCKSIDE POWER SUPPLY BOX** **2. BREAKER #2 IN STBD Q-BERTH HEADLINER NOTE: #2 SHORE POWER IS SUPPLIED WITH OPTIONAL AIR COND. EQUIPPED MODELS ONLY**
NOTE:	THE OPT.AIR COND IS POWERED BY THE "SHORE POWER B" CABLE OR THE OPT. GENERATOR. **NOTE: IF ANY OTHER APPLIANCES ARE TO BE USED WITH AIR COND RUNNING WHEN ON SHORE POWER BOTH "SHORE POWER A" AND "SHORE POWER B" CABLES MUST BE HOOKED UP.**
OPTIONAL INVERTER	1 TURN THE HOUSE BATTERY SELECTOR SWITCH UNDER CHART TABLE TO THE "ON" POSITION
WHEN IN INVERT MODE (CONVERTS 12V.D.C. TO 110V.A.C.)	2. TURN THE INVERTER REMOTE SW. (LOCATED AT NAV STATION) TO THE "ON" POSITION 3. TURN ON DESIRED BREAKER (EX. OUTLETS) ON "A" SIDE OF A.C. MAIN DISTRIBUTION PANEL NOTE: IT TAKES 10D.C. AMPS TO CREATE 1A.C. AMP, IF THE BATTERY VOLTAGE DROPS BELOW 10.5V. THE INVERTER WILL AUTOMATICALLY SHUT DOWN. (SEE "SEL. SW" & "METERS" ON PAGE 63A-7) **ALSO THE OUTPUT OF THE INVERTER IS NOT CAPABLE OF POWERING THE WATER HEATER OR AIR COND. SYSTEM**, THE WATER HEATER IS POWERED BY "SHORE POWER A" CABLE OR OPT. GENERATOR.
POWERS "A" SIDE OF A.C. PANEL ONLY WHEN INVERTING	**TO POWER D.C. SIDE OF PANEL AND "A" SIDE OF A.C. PANEL SIMULTANEOUSLY USING INVERTER:** 1. TURN ON D.C. MAIN BREAKER ON D.C. SIDE OF MAIN DISTRIBUTION PANEL 2. TURN THE SELECTOR SWITCH TO THE "ON" POSITION
USED WHEN NO SHORE POWER OR GEN.POWER BEING USED.	3. TURN INVERTER REMOTE SWITCH TO THE "ON" POSITION THIS PROCEDURE ALLOWS INVERTER TO SUPPLY 110V.A.C. POWER TO "A" SIDE OF A.C. PANEL BY DRAWING POWER FROM HOUSE BATTERY (THIS APPLIES WHEN THERE IS NO SHORE OR GENERATOR POWER BEING SUPPLIED TO PANEL)
BUILT IN INVERTER-TRANSFER SWITCH.	THE INVERTER AUTO. TRANSFERS SHORE POWER TO THE A.C. PANEL WHEN "SHORE POWER A" CABLE CONNECTED AND DOCKSIDE POWER PRESENT AT A.C. PANEL BYPASSING THE INVERT MODE CAPABILITIES.
OPTIONALGENERATOR	1.TURN (START) BATTERY SW. (LOCATED UNDER CHART TABLE) TO THE "ON" POSITION 2. CHECK SEA STRAINER AND OPEN RAW WATER SEACOCK. SEE PAGE 60A-1 FOR LOCATION 3. START GENERATOR (FOLLOW STARTING INSTRUCTIONS PROVIDED IN THE "GENERATOR MANUAL") 3. RAISE SLIDE BAR ON "A" SIDE OF A.C. PANEL AND TURN GENERATOR BREAKER TO THE "ON" POSITION 4. TO POWER "B" SIDE OF A.C. PANEL (TO USE AIR COND'S) RAISE SLIDE BAR ON "B" SIDE OF A.C. PANEL AND TURN PARALLEL BREAKER TO THE "ON " POSITION 5. **ON OPT. INVERTER MODEL**: TURN THE INVERTER REMOTE SWITCH TO THE "OFF" POSITION, AND THE HSE. BATTERY ON/OFF SWITCH TO THE "ON" POSITION.
STD. BATT. CHARGER	1. CONNECT SHORE POWER CABLE #1 TO POWER "A" SIDE OF A.C. POWER MAIN DISTRIBUTION PANEL AND TURN ON "SHORE POWER A" MAIN BREAKER 2. TURN "BATTERY CHARGER" BREAKER (LOCATED ON "A" SIDE OF A.C. PANEL) TO THE "ON" POSITION NOTE: **IT IS NOT NECESSARY** TO TURN ON THE "HOUSE" OR THE "START" BATTERY SWITCHES TO PROVIDE CHARGING POWER TO THE HOUSE & START BATTERIES.
ENGINE ALTERNATOR	1. TURN (START) BATTERY SELECTOR SWITCH TO THE "ON" POSITION 2. CHECK SEA STRAINER & OPEN RAW WATER SEACOCK. SEE PAGES 60A-1,A-2 FOR LOCATION 3. START SHIP'S ENGINE (FOLLOW STARTING INSTRUCTIONS IN THE "ENGINE MANUAL") 4. TURN (HOUSE) BATTERY SWITCH TO THE "ON" POSITION
OPTIONAL INVERTER INVERTER HAS A BUILT IN AUTO. CHARGING SYSTEM	1. CONNECT SHORE POWER CABLE #1 TO POWER "A" SIDE OF A.C. POWER MAIN DISTRIBUTION PANEL AND TURN ON "SHORE POWER A" MAIN BREAKER 2. TURN INVERTER REMOTE SWITCH TO THE "**OFF**" POSITION 3. TURN HOUSE BATTERY ON/OFF SWITCH TO THE "ON" POSITION NOTE: **IT IS NOT NECESSARY** TO TURN ON THE "START" BATTERY SWITCH TO PROVIDE CHARGING POWER TO THE START BATTERY. NOTES: **WHEN LEAVING BOAT UNATTENDED, BE SURE INVERTER REMOTE SWITCH IS IN THE "OFF" POSITION,** THIS WAY IF SHORE POWER IS LOST FOR ANY REASON, THIS WILL PREVENT THE INVERTER FROM CONVERTING 12V.D.C. TO A.C. VOLTAGE CAUSING HOUSE BATTERY TO BE DRAINED. WHEN THE INVERTER REMOTE SWITCH IS IN THE "OFF" POSITION THE INVERTER AUTOMATICALLY GOES INTO CHARGE MODE INVERTER CHARGE MODE WORKS ONLY WHEN THERE IS POWER TO THE "A" SIDE OF THE A.C. PANEL

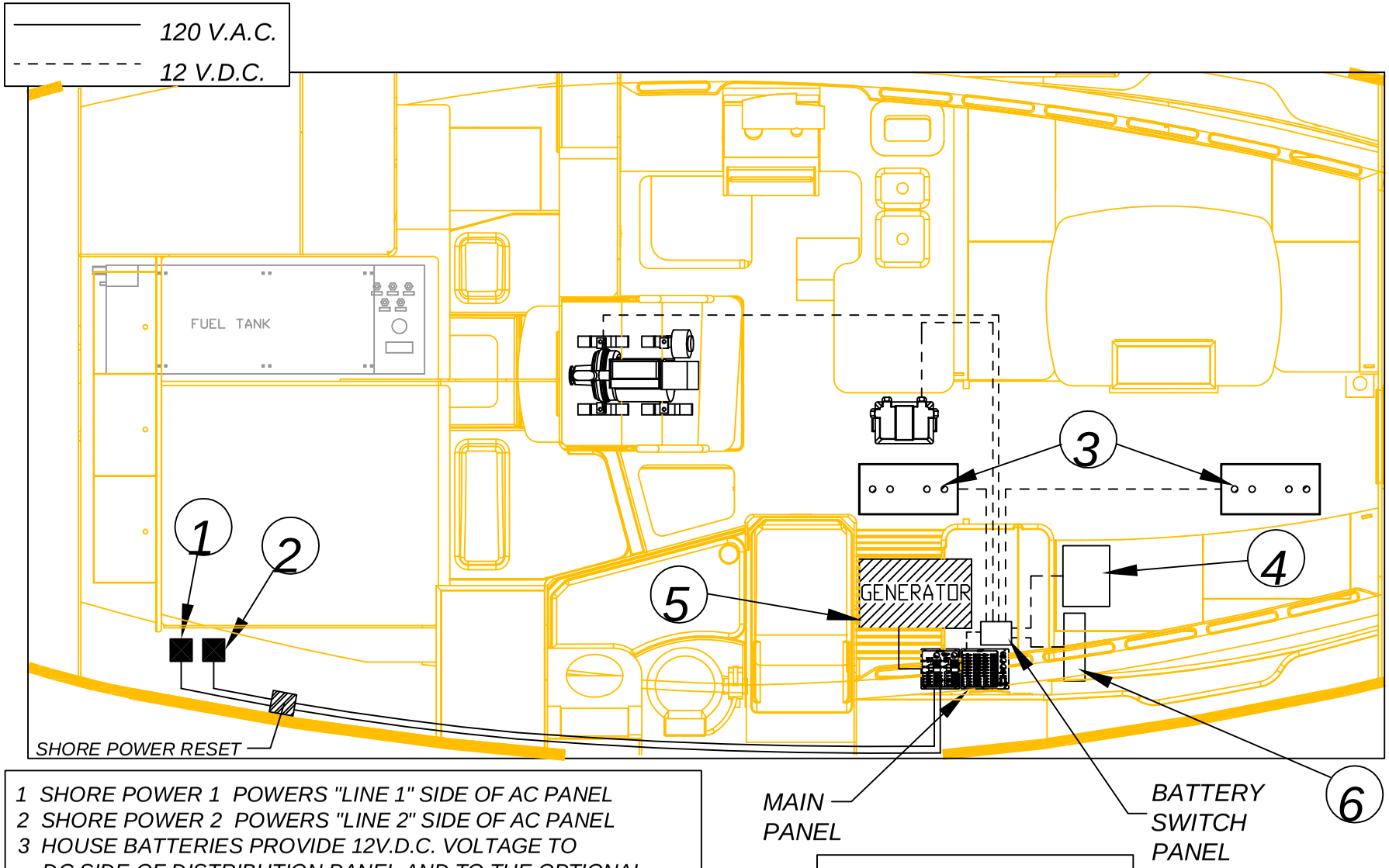

1 SHORE POWER 1 POWERS "LINE 1" SIDE OF AC PANEL
2 SHORE POWER 2 POWERS "LINE 2" SIDE OF AC PANEL
3 HOUSE BATTERIES PROVIDE 12V.D.C. VOLTAGE TO DC SIDE OF DISTRIBUTION PANEL AND TO THE OPTIONAL INVERTER VIA THE BATTERY SWITCH PANEL.
4 OPTIONAL INVERTER CONVERTS 12V.D.C. TO A.C. VOLTAGE AND POWERS "LINE 1" SIDE OF A.C. PANEL ONLY. (WITH THE EXCEPTION OF THE WATER HEATER)
5 OPTIONAL GENERATOR PROVIDES A.C. POWER TO BOTH "LINE 1 AND LINE 2" WHEN GENERATOR AND PARALLEL BREAKERS ARE IN THE "ON" POSITION WHILE GENERATOR IS RUNNING.
6. OPTIONAL BATTERY CHARGER

NOTE:
BE SURE THE BATTERY SELECTOR SWITCH ON THE BATTERY CHARGER IS IN THE PROPER POSITION FOR YOUR BATTERY TYPE

DRAWING TITLE: BASIC POWER SUPPLY SYSTEM LAYOUT
DRAWING NO. 4268063-A
REVISION NO. NONE
DRAWN BY: ENG
DATE: 7/15/02

This document discloses information for which HUNTER MARINE CORP. has proprietary rights.

HUNTER

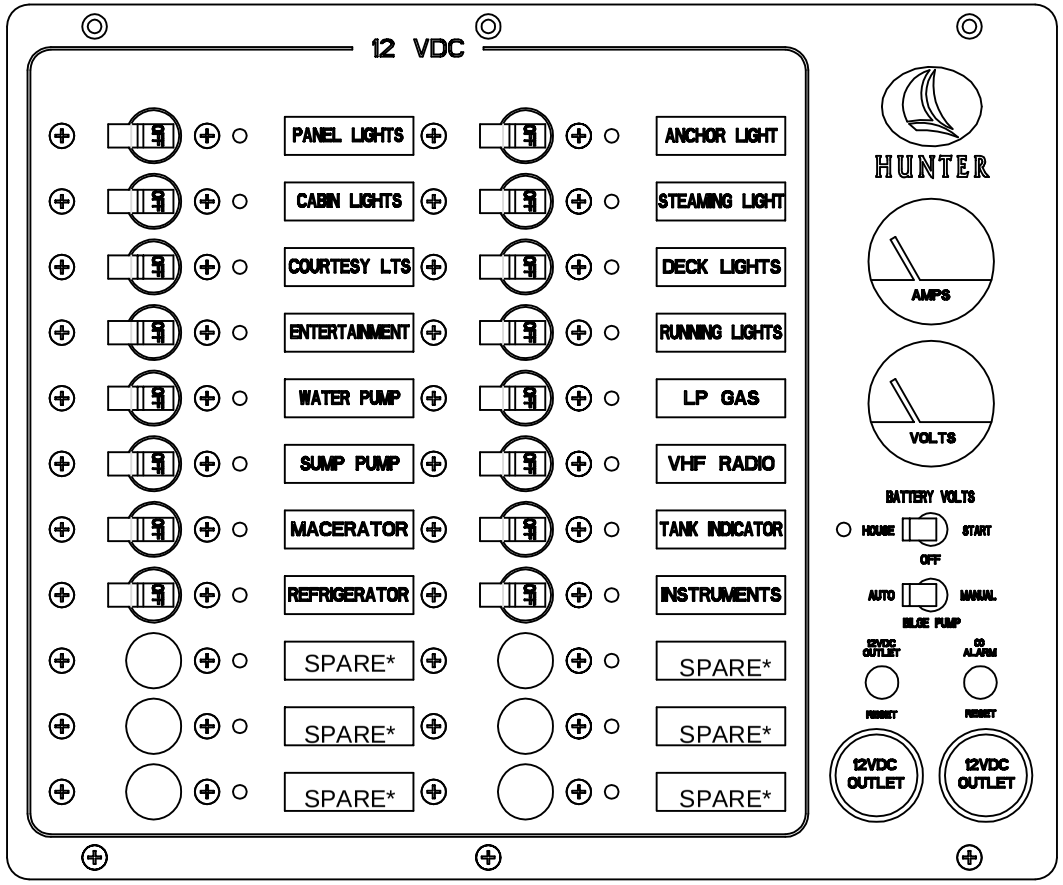

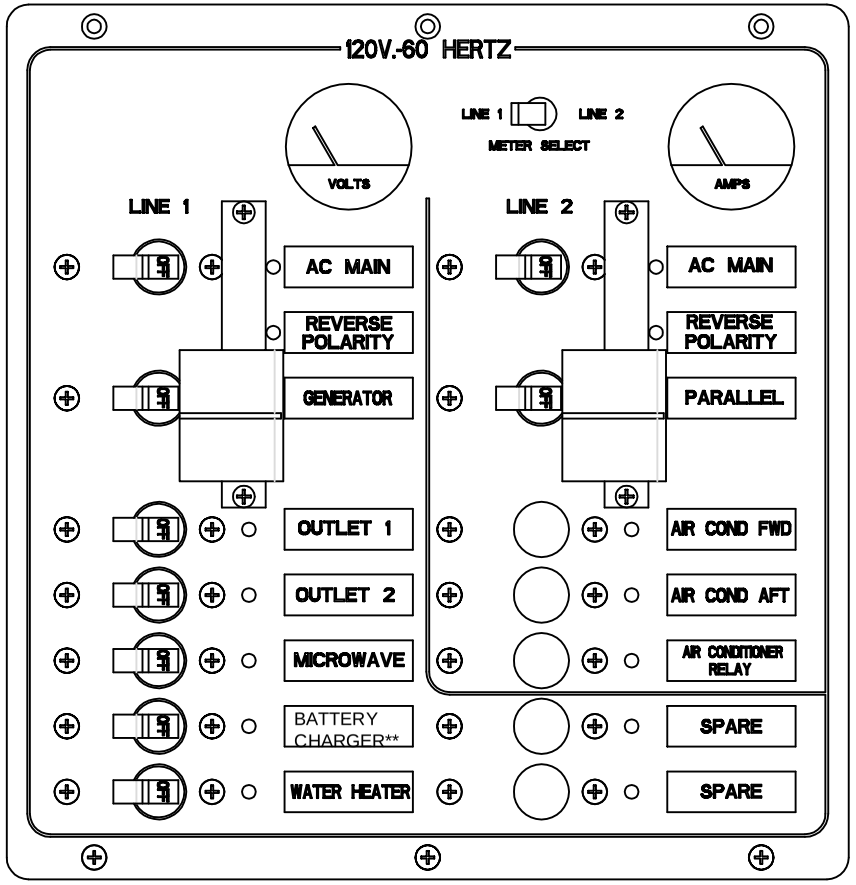

*POSSIBLE CONFIGURATIONS FOR THESE SPARES CAN INCLUDE FREEZER, VACCUFLUSH HEAD, WINDLASS, RADAR, AND FWD/AFT CABIN STEREO OPTIONS

**IF THE BOAT IS EQUIPPED WITH AN INVERTER INSTEAD OF BATTERY CHARGER, THIS BREAKER BECOMES A SPARE. POSSIBLE CONFIGURATIONS FOR THE SPARES ON THIS PANEL MAY INCLUDE THE WASHER/DRYER, WATERMAKER, OR ICEMAKER OPTIONS.

DRAWING TITLE: MAIN ELECTRIC PANEL
DRAWING NO. 4268063A–4
REVISION NO.
DRAWN BY: ENG
DATE:

This document discloses information for which HUNTER MARINE CORP. has proprietary rights.

HUNTER

BREAKER	DESCRIPTION
12 V. D.C. MAIN	SUPPLIES 12 V.D.C. POWER TO ALL BREAKERS ON D.C. SIDE OF PANEL.
PANEL LIGHTS	ILLUMINATES BOTH A.C. & D.C. SIDES OF THIS PANEL FOR NIGHT USE
CABIN LIGHTS	SUPPLIES POWER TO ALL INTERIOR LIGHTS AND COCKPIT LIGHT
COURTESY LIGHTS	
ENTERTAINMENT	SUPPLIES POWER TO STEREO UNIT
WATER PUMP	SUPPLIES POWER TO FRESH WATER PUMP TO PRESSURIZE WATER SYSTEM.
SUMP PUMP	
MACERATOR	SUPPLIES POWER TO MACERATOR (LOCATED INSIDE STBD AFT SWIM LOCKER), **NOTE: THESE DEVICES ARE USED FOR DIRECT** **OVERBOARD DISCHARGE OF RAW SEWAGE, BE AWARE OF YOUR LOCAL BOATING REG. BEFORE USING.**
REFRIGERATION	SUPPLIES POWER TO REF. COMPRESSOR, ADJUST THERMOSTATS INSIDE FRIDGE/FREEZER TO DESIRED TEMP.
ANCHOR LIGHT	SUPPLIES POWER TO 360 DEGREE LIGHT AT TOP OF MAST, USE WHEN ANCHORED AT NIGHT.
STEAMING LIGHT	SUPPLIES POWER TO STEAMING LIGHT LOCATED ON FWD. SIDE OF MAST APPROXIMATELY AT THE HEIGHT OF THE LOWER SPREADERS. USE AT NIGHT (WITH RUNNING LIGHTS) WHEN VESSEL UNDERWAY BY ENGINE POWER.
DECK LIGHTS	
RUNNING LIGHTS	SUPPLIES POWER TO THE BOW, STERN , & COMPASS LIGHT. USE AT NIGHT UNDER SAIL AND/OR ENGINE POWER.
L. P. GAS	SUPPLIES POWER TO L.P. GAS SWITCH AT GALLEY. SEE "L.P. GAS MANUAL" FOR OPER. & SAFETY INST.
VHF	SUPPLIES POWER TO THE VHF RADIO
TANK INDICATOR	SUPPLIES POWER TO FUEL TANK GAUGES
INSTRUMENTS	SUPPLIES POWER TO DEPTH, & SPEED REPEATERS LOCATED ON HELM CONSOLE.
BILGE PUMP	TOGGLE SWITCH STAYS IN THE "AUTO" POSITION, THIS ALWAYS FEEDS POWER TO THE FLOAT SWITCH (AS LONG AS BATTERY IS CONNECTED AND HAS AMPLE CHARGE). FOR MANUAL USE, PUSH SWITCH TO "MANUAL" ILLUMINATED LIGHT INDICATES POWER TO PUMP, THUS PUMP SHOULD BE RUNNING. PRIOR TO LEAVING VESSEL "MANUALLY" TEST PUMP AND CHECK BATTERY LEVEL. SEE BATTERY SELECT SWITCH BELOW.
OPT. WINDLASS	SUPPLIES POWER TO UP/DOWN CONTROLS AT ANCHOR WELL. **NOTE: BECAUSE THE WINDLASS DRAWS IT'S POWER FROM THE START BATTERY, IT IS GOOD PRACTICE TO START THE SHIPS ENGINE PRIOR TO OPERATING WINDLASS TO PREVENT BATTERY DRAIN. (IF NO POWER CHECK RESET ON REMOTE PANEL @ NAV STATION)**
OPT. AUTOPILOT	THIS BREAKER PROVIDED FOR AN OPTIONAL AUTOPILOT SYSTEM.
BLOWER	SUPPLIES POWER TO THE VENTILATION BLOWER IN THE ENGINE BOX
SPARE/S	***SEE NOTATION BELOW**
12V.D.C. AUX.	THESE POWER PLUGS PROVIDED FOR CELLPHONE, LAPTOP COMPUTER, ETC.
INDICATOR LIGHTS	INDICATORS ILLUMINATE WHEN 12 V.D.C. POWER PRESENT.
NOTES:	IF THE OPTIONAL AUTOPILOT WAS INSTALLED AT THE FACTORY, THE "INSTRUMENTS" POWER LEADS ARE WIRED TO THE AUTOPILOT BREAKER. (THIS APPLIES TO THE OPTIONAL G.P.S. AS WELL) THIS ALLOWS THESE UNITS TO WORK SIMULTANEOUSLY OFF THE AUTOPILOT BREAKER. **SEE PAGE 64B-1 FOR BREAKER AMPERAGES. SEE NOTATION BELOW.**
	***NOTE THE SPARE BREAKERS ON THIS PANEL EXIST BECAUSE THIS MODEL MAY NOT HAVE OPTIONED THE COINCIDING ACCESSORY FOR THAT BREAKER. FOR EXAMPLE, ON THIS PANEL, THE AUTOPILOT AND WINDLASS ARE OPTIONAL ITEMS AND MAY NOT HAVE BEEN REQUESTED. IF THIS IS THE CASE WITH YOUR MODEL, THEN THESE BREAKERS WILL THEN BECOME SPARES. BE AWARE OF THE BREAKER'S AMPERAGES TO BE SURE THAT IT IS COMPATIBLE WITH ANY DEVICE THAT IS TO BE CONNECTED TO IT.**

110V.A.C. (220 OVERSEAS MODELS) DISTRIBUTION PANEL

BREAKERS	DESCRIPTION
	"A" SIDE OF A.C. PANEL
BUS "A" BREAKER	PROVIDES A.C. VOLTAGE TO THIS SIDE OF PANEL WHEN SHORE POWER CORD "A" IS CONNECTED TO OUTLET AT DOCKSIDE POWER SUPPLY.
GENERATOR	SUPPLIES POWER **FROM** GENERATOR TO BOTH SHORE POWER "A" AND SHORE POWER "B" (AIR COND.) SIDES OF PANEL. NOTE: TO PROVIDE POWER TO SHORE POWER "B" SIDE OF PANEL MOVE SLIDE BAR UP AND TURN ON THE PARALLEL BREAKER ON THE SHORE POWER "B" SIDE OF PANEL.
OUTLETS 1	PROVIDES A.C. POWER TO THE OUTLETS ON THE PORT SIDE OF BOAT.
OUTLETS 2	PROVIDES A.C. POWER TO THE OUTLETS ON THE STBD. SIDE OF BOAT.
MICROWAVE	SUPPLIES POWER TO OUTLET BEHIND MICRO. IN WHICH MICROWAVE IS PLUGGED INTO.
WATER HEATER	SUPPLIES POWER TO WATER HEATER.**BE SURE TANK IS FULL AND SYSTEM IS FREE FROM AIR BEFORE APPLYING POWER TO HEATER TO PREVENT ELEMENT BURNOUT. NOTE DO NOT TRY TO POWER WATER HEATER OFF OF THE OPTIONAL INVERTER, IT IS NOT CAPABLE OF SUPPLYING ENOUGH POWER TO POWER UNIT.**
BATT. CHARGER	PROVIDES POWER TO BATTERY CHARGER WHICH IN TURN PROVIDES CHARGING POWER TO BATTERIES. NOTE: IF OPTIONAL INVERTER CHOSEN THIS BREAKER IS NOT UTILIZED AND IS AVAILABLE AS A "SPARE" BREAKER. ***SEE BELOW**
	"B" SIDE OF PANEL
BUS "B" BREAKER	PROVIDES A.C. VOLTAGE TO THIS SIDE OF PANEL WHEN SHORE POWER CORD "B" IS CONNECTED TO OUTLET AT DOCKSIDE POWER SUPPLY.
PARALLEL	PROVIDES POWER FROM GENERATOR TO THIS SIDE OF PANEL.(MOVE SLIDE BAR UP TO TURN BREAKER ON.)
FWD AIR COND.	PROVIDES POWER TO AIR COND. UNIT (SEE "AIR COND. MANUAL" FOR OPER. INSTRUCTIONS.)
AFT AIR COND	PROVIDES POWER TO AIR COND. UNIT (SEE "AIR COND. MANUAL" FOR OPER. INSTRUCTIONS.)
AIR COND RELAY	PROVIDES POWER TO AIR COND. SYSTEM WATER PUMP **ALWAYS TURN RELAY BREAKER ON BEFORE TURNING ON AIR COND UNITS**
SPARE	15amp BREAKER MAY BE USED AS AN ACCESSORY BREAKER. ***SEE BELOW**
SPARE	10amp BREAKER MAY BE USED AS AN ACCESSORY BREAKER. ***SEE BELOW**
	MISC. INFO
SPARE BREAKERS	***SEE BELOW**
LED INDICATORS	ILLUMINATE WHEN A.C. POWER PRESENT.
METER SEL. SWITCH	ALLOWS VOLTAGE BEING SUPPLIED AND AMPERAGE BEING DRAWN TO BE DISPLAYED ON VOLT & AMP METERS SWITCH POSITION "A" = "A" SIDE OF PANEL. SWITCH POSITION "B" = "B" SIDE OF PANEL.
REV. POLARITY	IF REVERSED POLARITY INDICATOR ILLUMINATES AFTER CONNECTING SHORE POWER HAVE DOCKSIDE POWER CHECKED BY QUALIFIED PERSONELL.
NOTE:	SEE PAGE 63A-12 ,64A, AND 65A-1 FOR INFORMATION CONCERNING BREAKER AMPERAGES
SPARE BREAKERS	**BE AWARE OF THE SPARE BREAKER'S AMPERAGE TO BE SURE THAT IT IS COMPATABLE WITH ANY DEVICE CONNECTED TO THESE BREAKERS (ADDITIONAL "SPARE BREAKER" LOCATIONS PROVIDED ONLY)**
	NOTE: A PRUDENT MARINER REALIZES THAT THE RESOURCES TO POWER A VESSEL ARE LIMITED. WHEN USING THE INVERTER OR GENERATOR ONE SHOULD BE CONSERVATIVE AND AWARE OF THE AMOUNT OF POWER BEING SUPPLIED VERSES POWER BEING DRAWN. THIS IS ESPECIALLY IMPORTANT WHEN USING OPTIONAL INVERTER POWER. CONSULT THE "INVERTER MANUAL" FOR POWER OUTPUT CAPABILITIES.

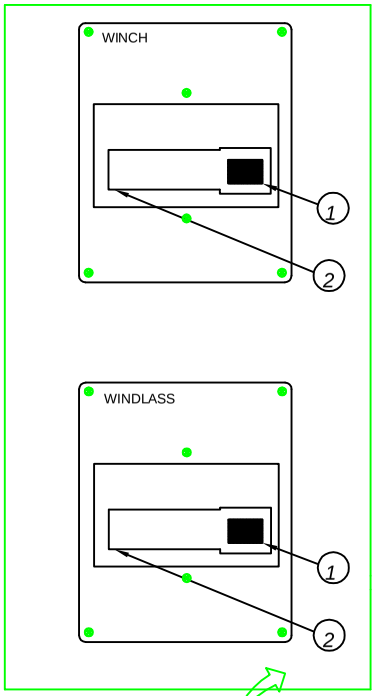

1. (TEST) ON/OFF BUTTON, PUSH TO TRIP RESET
2. "RESET" PUSH UP TO RESTORE POWER.

NOTE: WINDLASS PANEL SUPPLIES POWER TO THE WINDLASS MOTOR. THE "WINDLASS BREAKER" ON THE DC MAIN DISTRIBUTION PANEL, SUPPLIES POWER TO THE UP/DOWN CONTROLS IN THE ANCHORWELL LOCKER.

THE HALYARD WINCH PANEL SUPPLIES POWER TO THE SWITCH,(LOCATED ON STBD SIDE BLKHD OF COMPANIONWAY OPENING) WHICH SUPPLIES POWER TO THE WINCH.
WINDLASS IS OPTIONAL
ELECTRIC HALYARD IS STD.
(EXCEPT ON FURLING MASTS)

BATTERY ON/OFF SAFETY SWITCH PANEL

INVERTER/DRAW (HOUSE BATTERY) SELECTOR SWITCH

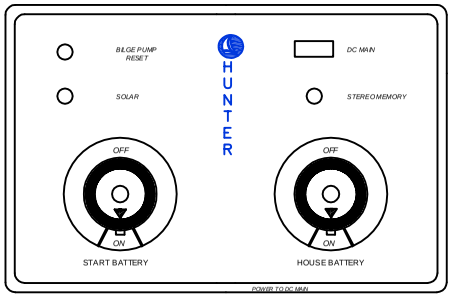

1. TANK SELECTOR SWITCHES
2. TANK SELECTION DISPLAYS

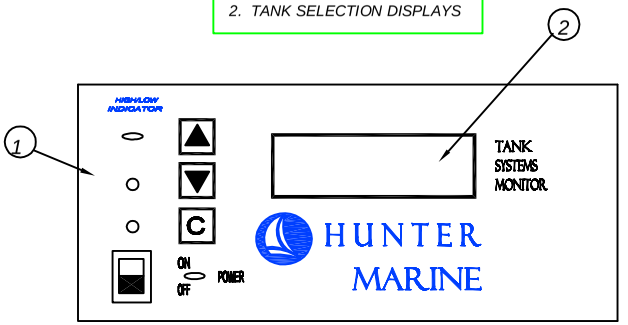

GALVANIC ISOLATOR MONITOR DISPLAY (NOT INSTALLED ON BOATS WITH 220 VAC - 50 hz ELECTRICAL SYSTEM)

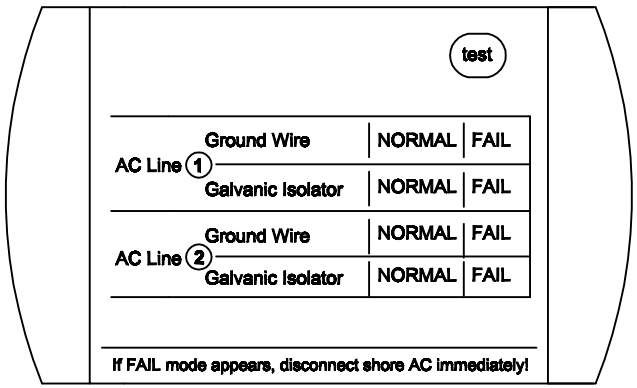

INVERTER STATUS DISPLAY

SEE PAGE 63A-2 "INVERTER" FOR OPERATION DETAILS.

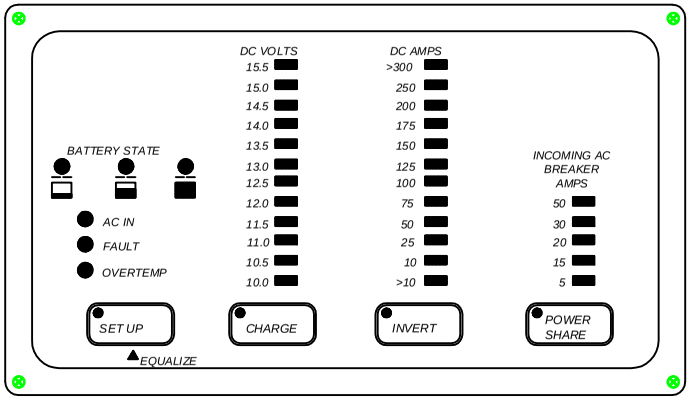

GALVANIC ISOLATOR MONITOR DISPLAY (NOT INSTALLED ON BOATS WITH 220 VAC - 50 hz ELECTRICAL SYSTEM)

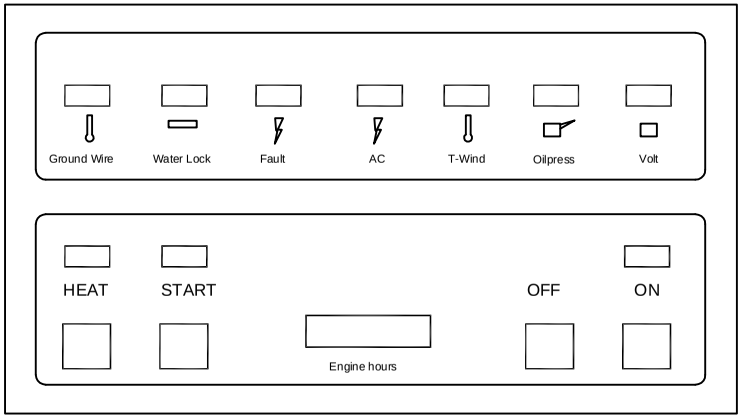

ALL PANELS LOCATED AT NAV STATION

SEE INDIVIDUAL COMPONENT MANUALS FOR DETAILS

DRAWING TITLE: SYSTEM PANELS	This document discloses information for which HUNTER MARINE CORP. has proprietary rights. HUNTER
DRAWING NO. 4268063A-7	REVISION NO. NONE
DRAWN BY: ENG	DATE: 7/23/02

12V.D.C. SYSTEM TROUBLESHOOTING GUIDE

TO POWER D.C. PANEL	**STD. BATTERY CHARGER MODEL** TURN (HOUSE) BATTERY SWITCH TO
THIS IS TO POWER PAN	THE "ON" POSITION, THEN TURN ON "D.C. MAIN" BREAKER ON MAIN DIST. PANEL.
FOR CHARGING, SEE	**IF NO POWER TO PANEL:** CHECK **"RESET"** HOL ON (HOUSE) BATTERY SWITCH PANEL
PAGE 63A-2	AND/OR BATT. CONNECTIONS IF NECESSARY.

TO POWER D.C. PANEL	**OPTIONAL INVERTER MODEL**, TURN ON "D.C. MAIN" BREAKER ON PANEL, IT IS **NOT**
THIS IS TO POWER PAN	NECESSARY TO TURN ON THE HOUSE BATTERY SWITCH TO THE "ON" POSITION
FOR CHARGING, SEE	TO SUPPLY POWER TO D.C. PANEL
PAGE 63A-2	**IF NO POWER TO PANEL:** CHECK THE 50amp RESET **BREAKER** AND/OR THE 300 amp IN LINE
	FUSES AT THE HOUSE BATT OR BATT. CONNECTIONS IF NECESSARY.

COMPONENT	SYMPTOM	POSSIBLE SOLUTION/S
D.C. MAIN	NO POWER TO PANEL	SEE "TO POWER PANEL" ABOVE BATTERY/S CHARGED?
PANEL LIGHTS	PANEL WON'T ILLUMINATE	SEE "TO POWER TO PANEL" ABOVE BATTERY TERMINALS CLEAN? SEEK QUALIFIED PERSONELL
CABIN LIGHTS	WON'T ILLUMINATE	SEE "TO POWER PANEL" ABOVE BULB/S NEED REPLACING?
COURTESY LIGHTS (AT CRTSY. LIGHTS MAIN SALON)	WON'T ILLUMINATE	SEE "TO POWER PANEL" ABOVE BULBS/S NEED REPLACING?
COURTESY LIGHTS ENGINE BOX COMP. COCKPIT CONSOLE	WON'T ILLUMINATE	SEE "TO POWER PANEL" ABOVE PLUNGER SWITCH STUCK? IS SWITCH @ CONSOLE "ON"?
TANK INDICATOR	TANK LEVEL GAUGES DON'T ILLUMINATE TANK LEVEL DISPLAYED IS INCORRECT	SEE "TO POWER PANEL" ABOVE TANK SENDING UNIT NEEDS CLEANING
WATER PRESSURE	NO POWER CYCLES ON/OFF EXCESSIVELY	SEE "TO POWER PANEL" ABOVE FAUCETS OFF? LEAK IN SYSTEM SEE PAGEC 57B,C FOR SYSTEM LAYOUT
SHOWER SUMP	WON'T PUMP WHEN SUMP BOX FILLED (PUMP WON,T QUIT RUNNING) PUMP MAKES NOISE, DOESN'T PUMP PUMP RUNS BUT DOESN'T PUMP	SEE "TO POWER PANEL" ABOVE IS FLOAT SWITCH STUCK? DEBRIS IN PUMP IMPELLER? DISCHARGE HOSE CLOGGED? SEACOCK DISCHARGE VALVE CLOSED?
MACERATOR	RUNS BUT DOESN'T DISCHARGE PUMP MAKES NOISE, DOESN'T PUMP	IS DISCHARGE SEACOCK OPEN? IS WASTE DECK FITTING SECURE, IS IT PULLING AIR THRU? IF SO REPLACE 0- RING ON CAP. IS TANK VENT (HULL FITTING) CLOGGED? SEE PAGE 60A-1,A-2 FOR LOCATIONS LODGED DEBRIS, **TURN OFF POWER** TO PUMP, INSERT SCREWDRIVER INTO PUMP ARMATURE AT END OF PUMP AND TURN TO DISLODGE DEBRIS
STEREO	WON'T TURN ON STEREO TURNS ON, NO SOUND VCP WON'T PLAY	SEE "TO POWER PANEL" ABOVE IS STEREO UNIT ON? ARE VOLUME CONTROLS TURNED DOWN? SEE VIDEO PLAYER OWNERS MANUAL
ENTERTAINMENT SYSTEM	WON'T TURN ON TV TURNS ON, NO SOUND	SEE "TO POWER PANEL" ABOVE ARE TV / DVD UNITS ON? ARE VOLUME CONTROLS TURNED DOWN TURNED DOWN?
REFRIGERATION	WON'T GET COLD UNIT KEEPS TURNING OFF	SEE "TO POWER PANEL" ABOVE. IS THERMOSTATS TURNED ON? IS RAW WATER **INTAKE** VALVE CLOSED? IS SEACOCK **DISCHARGE** VALVE CLOSED? IS FILTER CLEAN? IS THRU HULL CLOGGED? SEEK QUALIFIED PERSONELL
BILGE PUMP	WON'T OPERATE AUTO OR MANUAL PUMP MAKES NOISE, DOESN'T PUMP PUMP RUNS BUT DOESN'T DISCHARGE	BATTERY LEVEL O.K.? SEE VOLT METER CHECK BILGE RESET ON STRT.BATT. SEL. SWITCH PANEL INSIDE STBD AFT GULLWING LOCKER BATTERY CONNECTIONS GOOD? DEBRIS IN PUMP IMPELLER? DISCHARGE HOSE CLOGGED?

NOTE: COMPONENT/S FAILURE COULD ALSO BE THE RESULT OF A POOR "GROUND" CONNECTION. SEE PAGE 64A FOR BUSSBAR LOCATION. DUE TO VIBRATION, WEATHER CONDITIONS, ECT. OCCASIONAL INSPECTION, CLEANING AND TIGHTENING OF THESE TERMINALS (BY QUALIFIED PERSONELL) MAY BE NECESSARY.

12V. D.C. SYSTEM TROUBLESHOOTING GUIDE CONT:

COMPONENT	SYMPTOM	POSSIBLE SOLUTION/S
WINDLASS	UP/DOWN CONTROLS DON'T OPERATE WINDLASS	SEE "TO POWER PANEL" PREV. PAGE WINDLASS SWITCH AT WINDLASS RESET PANEL ON? IS RESET TRIPPED?
INSTRUMENTS	REPEATERS DON'T OPERATE	SEE "TO POWER PANEL" PREV. PAGE DO TRANSDUCERS NEED CLEANING? SEE INSTRUMENTS MANUAL
VHF RADIO	WON'T OPERATE TURNS ON, WON'T TRANSMIT/RECEIVE	SEE "TO POWER PANEL" PREV. PAGE RADIO TURNED ON? ANTENNA CONNECTED PROPERLY?
OPTIONAL AUTO PILOT	WON'T OPERATE WON'T HOLD STEADY COURSE CONSTANTLY ADJUSTING HELM	SEE "TO POWER PANEL" PREV. PAGE IS THERE ANY METAL OBJECTS NEAR THE FLUX GATE COMPASS LOCATED IN THE STBD. AFT MAIN BUNK COMP? SENSITIVITY SETTING SET TO HIGH, SEE "AUTO PILOT MANUAL" FOR SENS. ADJ.
OPTIONAL GENERATOR BLOWER	WON'T OPERATE	SEE "TO POWER PANEL" PREV. PAGE IS UNIT "ON"?
BILGE PUMP	WON'T OPERATE AUTO OR MANUAL PUMP MAKES NOISE, DOESN'T PUMP PUMP RUNS BUT DOESN'T DISCHARGE	BATTERY LEVEL O.K.? SEE VOLT METER CHECK BILGE RESET ON STRT.BATT. SEL. SWITCH PANEL UNDER CHART TABLE. BATTERY CONNECTIONS GOOD? DEBRIS IN PUMP IMPELLER? DISCHARGE HOSE CLOGGED? SEACOCK DISCHARGE VALVE CLOSED?
ANCHOR, STEAMING, DECK, & RUNNING LIGHTS	WON'T ILLUMINATE	SEE "TO POWER PANEL" PREV. PAGE CHECK CONNECTIONS IN ACCESS PANEL TOP OF COMPRESSION POST. BULBS NEED REPLACING?
12 V.D.C.AUX. PLUG	NO POWER PRESENT	CHECK IN-LINE FUSE BACK OF PANEL
VOLT METER	NO VOLTAGE DISPLAYED	SEE "TO POWER PANEL" PREV. PAGE IS HSE. BATT.ON/OFF SW. ON #1? IS THIS POSITION AVAILABLE FOR ADDITIONAL BATTERY, USE #2,3, OR 4 POSITION. CK. FUSES ON HSE. BATT. ON/OFF PANEL ARE BATTERY CONNECTIONS GOOD? HAVE BATTERIES CHECKED HAVE METER CHECKED BY QUALIFIED PERSONELL.
AMP METER	NO AMPERAGE DISPLAYED	IS D.C. MAIN ON? IS ANYTHING IN THE 12V. SYSTEM TURNED ON & RUNNING? HAVE METER CHECKED BY QUALIFIED PERSONELL.
SOLAR PANEL	NO OUTPUT TO BATTERY/S	CK. FUSES ON BATTERY SWITCH PANEL

110V.A.C. (220V. OVERSEAS MODELS) SYSTEM TROUBLESHOOTING GUIDE

COMPONENT	SYMPTOM	POSSIBLE SOLUTION/S
SHORE POWER "A"	NO POWER TO PANEL	SEE "POWER SYSTEM OPERATIONS" PAGE 63A-2 CHECK DOCKSIDE BREAKER AND/OR BREAKER #1 LOCATED INSIDE PT. COCKPIT LOCKER. CHECK "RESETS" ON (OPT.)INVERTER (SEE "INVERTER MAN.")
OUTLETS #1 & 2	NO POWER	SEE "POWER SYSTEM OPERATIONS" PAGE 63A-2 IS OUTLET BREAKER/S ON? CHECK RESET ON G.F.I. OUTLETS AT GALLEY & AT NAV. STATION. CHECK RESETS ON (OPT.) INVERTER (SEE "INVERTER MAN.")
MICROWAVE	NO POWER	IS BREAKER ON? SEE "POWER SYSTEM OPERATIONS" PAGE 63A-2 IS MICROWAVE ON? SEE "MICRO MANUAL"
WATER HEATER	NO POWER WON'T HEAT WATER WATER TOO COLD/HOT	IS BREAKER ON? SEE "POWER SYSTEM OPERATIONS" PAGE 63A-2 CHECK "RESET" ON HEATER SEE "WATER HEATER MANUAL" FOR LOCATION. SEE "WATER HEATER MANUAL" FOR THERMOSTAT ADJUSTMENT AND/OR ELEMENT REPLACEMENT, SEEK QUALIFIED PERSONELL.
BATTERY CHARGER (STANDARD)	NOT CHARGING BATTERY/S	IS SHORE POWER "A" ON IS BATT. CHARGER BREAKER ON? IS RESET TRIPPED ON HOUSE BATTERY ON/OFF PANEL CHECK FUSES BEHIND HOUSE BATT. ON/OFF PANELS ARE BATTERY CONNECTIONS GOOD?
INVERTER/BATT. CHARGER (OPTIONAL) (IN INVERTER MODE)	INV. NOT SUPPLYING A.C.POWER INV. ON BUT UNABLE TO OPERATE DESIRED APPLIANCE/S	IS INVERTER REMOTE SWITCH AT NAV STATION ON? IS DESIRED APPLIANCE BREAKER ON? IS BATTERY VOLTAGE LOW? SEE VOLTAGE DISPLAY ON INVERTER REMOTE PANEL, ARE YOU ASKING THE INVERTER TO POWER MORE THAN IT IS CAPABLE? SEE "INVERTER MANUAL" FOR INFORMATION REGARDING POWER OUTPUT CAPABILITIES. CHECK "RESETS ON (OPT.) INVERTER (SEE "INVERTER MAN.")
INVERTER/**BATT. CHARGER** (OPTIONAL) (IN CHARGING MODE)	NOT CHARGING BATTERY/S	IS SHORE POWER "A".ON? SEE "POWER SYSTEM OPERATIONS" PAGE 63A-2 IS BATTERY SELECTOR SWITCH IN "ON" POSITION? CHECK IN-LINE 300amp FUSE AT BATTERY ARE BATTERY CONNECTIONS GOOD? INVERTER REMOTE SWITCH SHOULD BE IN THE "OFF" POSITION. (THIS IS NECESSARY IN THE EVENT YOU "LOSE" SHORE POWER, THE INVERTER DOESN'T GO INTO INVERT MODE CAUSING BATT./S TO DRAIN IF YOU LEFT AN A.C. APPLIANCE ON..

110V.A.C. (220V. OVERSEAS MODELS) SYSTEM TROUBLESHOOTING GUIDE CONT:

COMPONENT	SYMPTOM	POSSIBLE SOLUTIONS
SHORE POWER "B"	NO POWER TO PANEL	SEE "POWER SYSTEMS OPERATION PAGE 63A-2" CHECK DOCKSIDE BREAKER AND/OR BREAKER #2 INSIDE PT. GULLWING LOCKER.
AIR COND.	WON'T TURN ON	IS BREAKER ON? SEE "POWER SYSTEMS OPERATION" PAGE 63A-2 SEE " AIR CONDITIONER" MANUAL
	TURNS ON THEN SHUTS DOWN	IS AIR COND. RAW WATER **PICK UP** SEACOCK OPEN? IF SO, IS WATER CIRCULATING? SEE PAGE 60 FOR AIR COND. DISCHARGE THRUHULL LOCATION, IF NOT IS AIR COND. PICKUP BEING RESTRICTED BY DEBRIS? IS **DISCHARGE** SEACOCK OPEN?
	OTHER	SEE "AIR CONDITIONER" MANUAL
OPTIONAL GENERATOR (APPLIES TO BOTH "A" & "B" SIDES OF A.C. PANEL)		
GENERATOR	NO POWER TO STARTER	IS START BATT. SELECTOR SWITCH ON?
	RUNNING, BUT NO POWER AT PANEL.	IS "GENERATOR BREAKER" ON "A" SIDE OF PANEL ON? (MOVE SLIDE BAR UP TO TURN THIS BREAKER ON). IS "PARALLEL BREAKER" ON "B" SIDE OF PANEL ON? SEE GENERATOR MANUAL
	WON'T START	DID YOU FOLLOW PROPER STARTING PROCEDURE AS DESCRIBED IN THE "GENERATOR MANUAL"? DO YOU HAVE AN AMPLE AMOUNT OF DIESEL FUEL? REMEMBER THE GENERATOR FUEL PICKUP TUBE IS SHORTER THAN THE PICKUP TUBE FOR THE ENGINE, THIS PREVENTS GENERATOR FROM DRAINING TANK SINCE ENGINE POWER IS MORE IMPORTANT THAN GENERATOR POWER. REFER TO GENERATOR MANUAL FOR POSSIBLE FUSE OR RESET ON GENERATOR.
	GEN. STARTS THEN SHUTS DOWN	IS RAW WATER PICKUP SEACOCK OPEN, OR OBSTRUCTED?

1. SHORE POWER INLET
2. OUTLETS
3. ALL LINES LEAD TO A.C. SIDE OF MAIN PANEL
4. BATTERY CHARGER
5. GFCI OUTLETS
6. MICROWAVE OUTLET (ONLY OUTLET ON CIRCUIT)
7. WATER HEATER

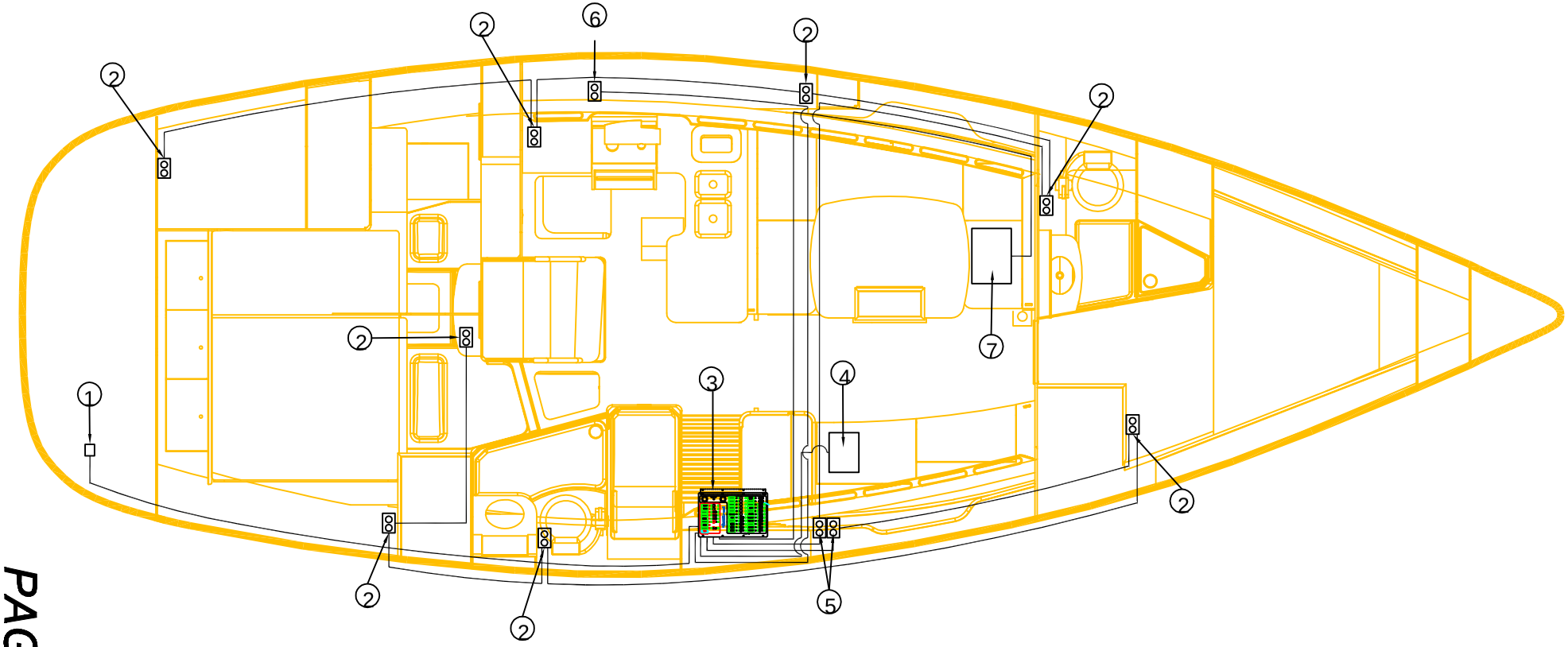

PAGE 63A-12

DRAWING TITLE: A.C. WIRE RUN LAYOUT	
DRAWING NO. 4268063A-12	REVISION NO. None
DRAWN BY: ENG	DATE: 07/11/02

This document discloses information for which HUNTER MARINE CORP. has proprietary rights.

HUNTER

H426 WATTAGE DEMAND FOR ELECTRICAL EQUIPMENT AND APPLIANCES

NOTE: A PRUDENT MARINER REALIZES THAT THE RESOURCES TO POWER A VESSEL ARE LIMITED. WHEN USING THE ALTERNATE POWER SOURCES ONE SHOULD BE CONSERVATIVE AND AWARE OF THE AMOUNT OF POWER BEING SUPPLIED VERSES POWER BEING DRAWN THIS IS ESPECIALLY IMPORTANT WHEN USING THE INVERTER POWER. CONSULT THE "INVERTER MANUAL" FOR POWER OUTPUT CAPABILITIES.

FIXED APPLIANCES:

SEE MANUALS AND/OR SPECIFICATION SHEETS IN YOUR OWNER'S PACK

PORTABLE APPLIANCES:

BELOW ARE APPROXIMATE EXAMPLES OF THE AMPERAGE DRAW ASSOCIATED WITH CERTAIN ITEMS.

APPLIANCES: / WATTS:

COFFEE MAKER.....800 - 1,000 WATTS
FRYING PAN.....1,000 - 2,500 WATTS
TOASTER.....800 - 1,000 WATTS
FAN.....75 - 300 WATTS
RADIO.....60 - 150 WATTS
TV/DVD/STEREO.....250 - 600 WATTS
HOT PLATE.....800 - 1,200 WATTS
HAIR DRYER.....700 - 1,100 WATTS
SHAVER.....50 - 100 WATTS
CLOCK.....25 - 50 WATTS
BLENDER.....250 - 350 WATTS
TOASTER OVEN.....1,250 - 1,700 WATTS
MICROWAVE.....900-1200 WATTS

ALTERNATE POWER SOURCES: / PROVIDED WATTS:

SMALLER MODEL INVERTER.....1,000 WATTS
MEDIUM MODEL INVERTER.....2,000 WATTS
LARGER MODEL INVERTER.....2,500 WATTS
SMALLER MODEL GENERATOR.....6,000 WATTS
LARGER MODEL GENERATOR.....8,000 WATTS
SHORE POWER (PER INLET).....3,600 WATTS

EXAMPLE: TV (250-600)+ TOASTER (800-1,000)+ HAIR DRYER (700-1,100) = TOTAL (1,750-2,700)
THUS, IF THE WATTS BEING USED EXCEEDS THE WATTS BEING PRODUCED, THEN SOME OF THE ITEMS IN USE WILL NOT BE FUNCTIONAL. AGAIN, IT IS IMPORTANT TO BE AWARE OF THE AMPERAGE DRAW VERSUS THE AMPERAGE OUTPUT AT ALL TIMES.

BASIC OPERATING INSTRUCTIONS:

1. CHOOSE POWER SOURCE (SHORE POWER OR GENERATOR) SEE PAGES 63A-2
2. CHECK AIR COND. SEA STRAINER, CLEAN IF NECESSARY
3. OPEN RAW WATER PICKUP SEACOCK
   MAKE SURE THAT DISCHARGE VALVE IS OPEN
4. TURN ON A.C. MAIN (BUS "B") BREAKER ON MAIN A.C. PANEL
5. TURN ON UNIT AT THERMOSTAT DISPLAY PANEL AND SET TEMP.

NOTE:

IF ANY OTHER APPLIANCES ARE TO BE USED WHEN AIR CONDITIONER IS RUNNING WHEN ON SHORE POWER, BOTH "SHORE POWER A" AND "SHORE POWER B" CABLES MUST BE HOOKED UP.

IF THERE IS NO POWER AT PANEL WHEN CONNECTED TO SHORE POWER, CHECK MAIN BREAKERS IN AFT CABIN, ON THE STRBD HEADLINER

SEE AIR CONDITION MANUAL FOR DETAILED OPERATING PROGRAMMING/TROUBLESHOOTING INSTRUCTIONS

DRAWING TITLE: AIR COND OPERATING INSTRUCTIONS	
DRAWING NO.: 4268063B-1	REVISION NO.: NONE
DRAWN BY: ENG	DATE: 9/01/02

This document discloses information for which HUNTER MARINE CORP. has proprietary rights.

HUNTER

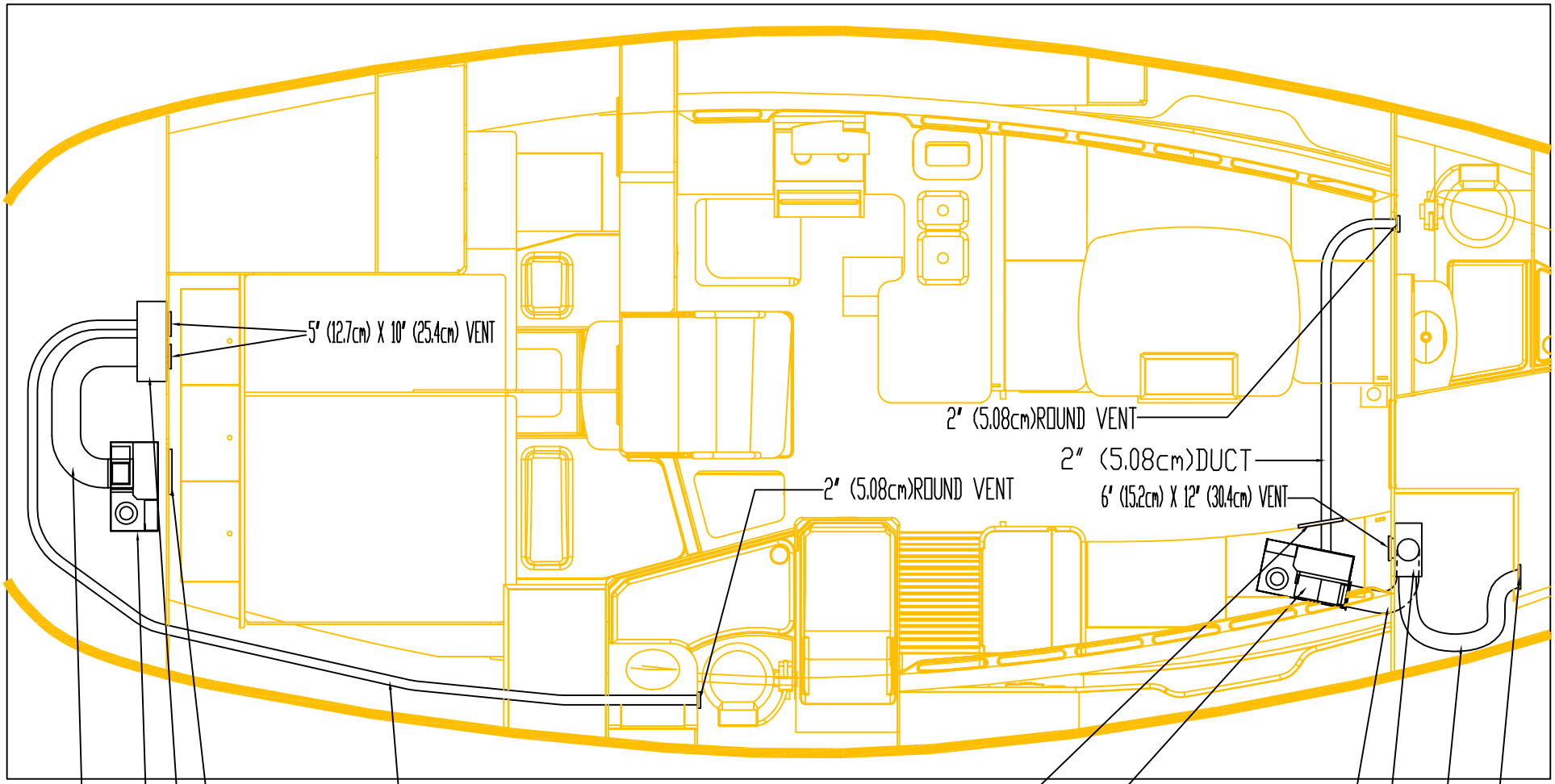

PAGE 63B-2

DRAWING TITLE: AIR CONDITIONING DUCT LAYOUT

DRAWING NO.	REVISION NO.
4268063B-2	None
DRAWN BY: ENG	DATE: 07/11/02

This document discloses information for which HUNTER MARINE CORP. has proprietary rights.

HUNTER

A 3/4" (1.9cm)BALL VALVE WITH THRU-HULL
B 3/4" (1.9cm)STRAINER
C 3/4" (1.9cm)HOSE
D 5/8" (1.6cm)HOSE
E A/C SEA WATER PUMP
F 16K BTU AIR CONDITIONER
G 10K BTU AIR CONDITIONER
H 1/2" (1.27cm)BALL VALVE
I 1/2" (1.27cm)DISCHARGE THRU-HULL FITTING
J 5/8"(1.6cm)HB X 1/2"(1.27cm)MPT

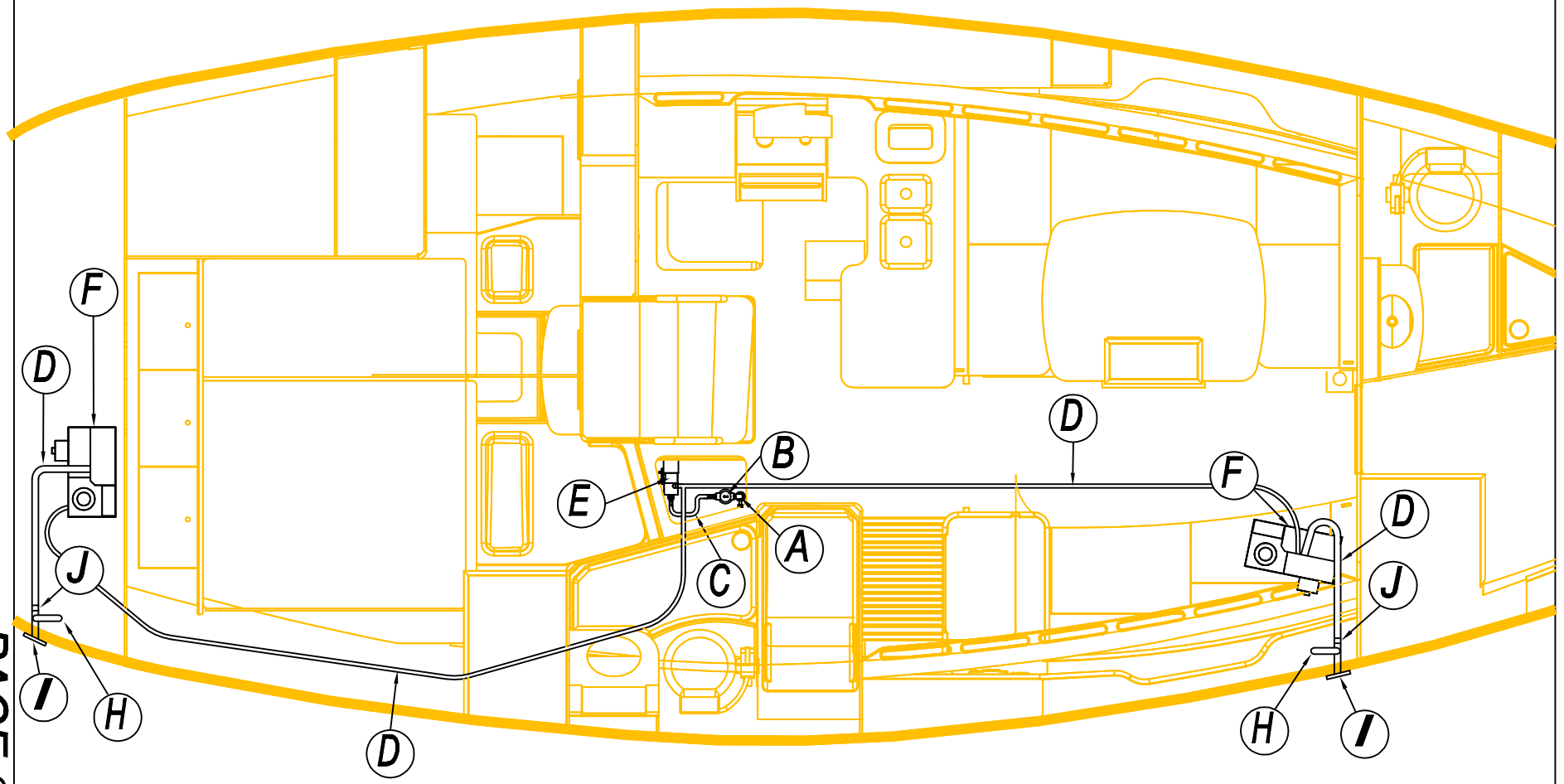

PAGE 63B-3

DRAWING TITLE: AIR COND SYSTEM PLUMBING LAYOUT
DRAWING NO. 4268063B-3
REVISION NO. NONE
DRAWN BY: ENG
DATE: 6/18/01

This document discloses information for which HUNTER MARINE CORP. has proprietary rights.

HUNTER

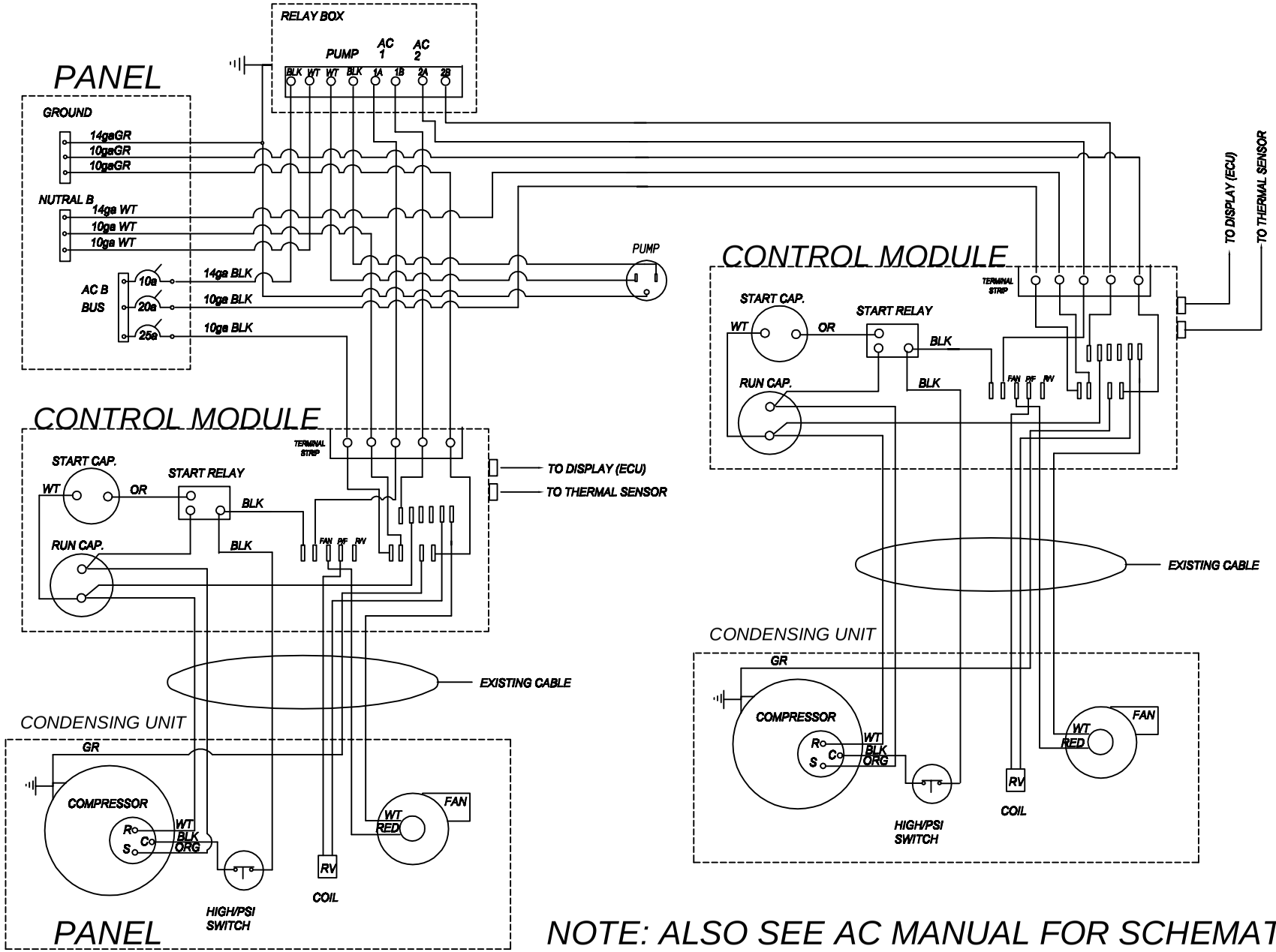

PAGE 63B-4

DRAWING TITLE: AIR COND SCHEMATIC	
DRAWING NO. 4268063B-4	REVISION NO. None
DRAWN BY: ENG	DATE: 09/11/02

This document discloses information for which HUNTER MARINE CORP. has proprietary rights.

HUNTER

BATTERY CHARGING SYSTEM

BASIC OPERATING INSTRUCTIONS:

① CONNECT SHORE POWER TO DOCKSIDE SUPPLY AND SHORE POWER INLET ON STERN OF BOAT STBD. SIDE

② TURN ON "A.C. MAIN" BREAKER

③ TURN ON "BATTERY CHARGER" BREAKER

NOTE:
CHECK FOR CORRECT FLUID LEVEL IN BATTERIES PRIOR TO USING CHARGER / OPT INVERTER. USING THE ENGINE ALTERNATOR AS A CHARGING SOURCE WILL SIGNIFICANTLY REDUCE THE DRAIN ON THE HOUSE / START BATTERIES.

This document discloses information for which HUNTER MARINE CORP. has proprietary rights.

DRAWING TITLE:	CHARGING SYSTEM OPERATION
DRAWING NO.	4268063C-1
REVISION NO.	None
DRAWN BY:	ENG
DATE:	07/11/02

HUNTER

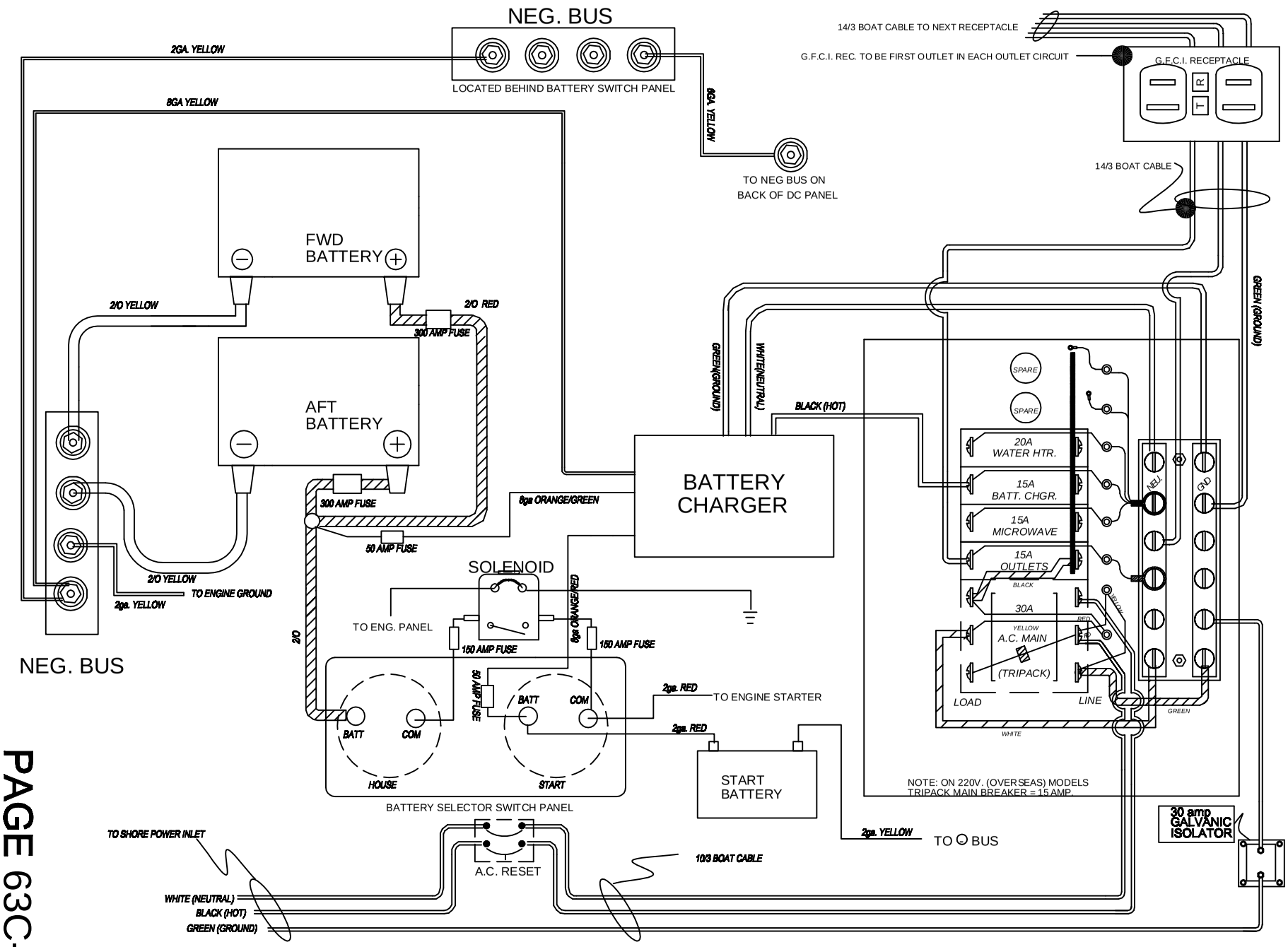

PAGE 63C-2

PANEL COMPONENTS SHOWN AS VIEWED WHEN PANEL IS OPEN

DRAWING TITLE: CHARGING SYSTEM SCHEMATIC/BATTERY CHARGER

DRAWING NO.	REVISION NO.
4268063C-2	NONE
DRAWN BY: ENG	DATE: 12/15/02

This document discloses information for which HUNTER MARINE CORP. has proprietary rights.

HUNTER

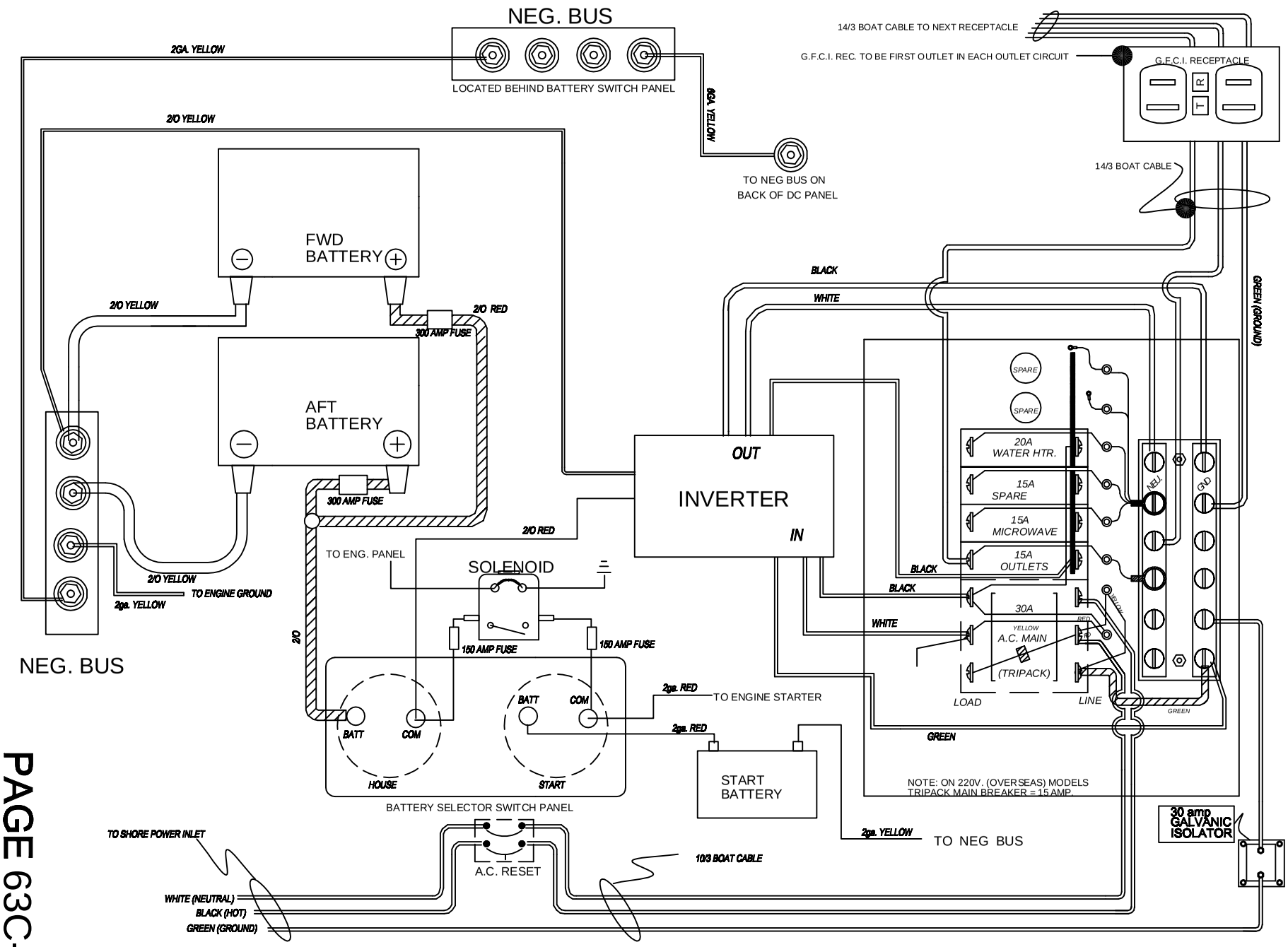

PAGE 63C-3

PANEL COMPONENTS SHOWN AS VIEWED WHEN PANEL IS OPEN

DRAWING TITLE: CHARGING SYSTEM SCHEMATIC/INVERTER

DRAWING NO.	REVISION NO.
4268063C-3	NONE
DRAWN BY: ENG	DATE: 12/15/02

This document discloses information for which HUNTER MARINE CORP. has proprietary rights.

HUNTER

OPTIONAL 8 KW GENERATOR SYSTEM...

BASIC OPERATING INSTRUCTIONS: (NOTE: READ GENERATOR MANUAL BEFORE OPERATING GEN.)

1. CHECK DIESEL FUEL LEVEL
2. CHECK OIL LEVEL IN GENERATOR (SEE GEN. MANUAL FOR INST.)
3. TURN ON START BATTERY SELECTOR SWITCH (LOCATED AT NAVIGATION STATION)
4. CHECK SEA STRAINER (UNDER SOLE FWD OF AFT STRM. DOOR)
5. OPEN RAW WATER SEACOCK (LOCATED W/STRAINER)
6. START GENERATOR USING START PROCEDURE IN "GENERATOR MANUAL" !!!
7. TURN ON "GENERATOR" BRKR. ON "A" SIDE OF A.C. PANEL TO POWER "A" SIDE AND (IF DESIRED) TO POWER "B" SIDE OF PANEL, RAISE SLIDE BAR ON "B" SIDE OF A.C. PANEL AND TURN "PARALLEL" BREAKER TO THE "ON" POSITION
8. TURN ON DESIRED APPLIANCE BREAKER (FOR EXAMPLE "OUTLETS")
9. TO SHUT GEN. DOWN PUSH STOP SWITCH UNTIL GEN STOPS.

NOTE: SEE GENERATOR MANUAL FOR PROPER MAINTENANCE, TROUBLESHOOTING, ETC.

DRAWING TITLE: OPTIONAL GENERATOR OPERATING INSTRUCTIONS	
DRAWING NO. 4268063D-1	REVISION NO. None
DRAWN BY: ENG	DATE: 07/11/02

This document discloses information for which HUNTER MARINE CORP. has proprietary rights.

HUNTER

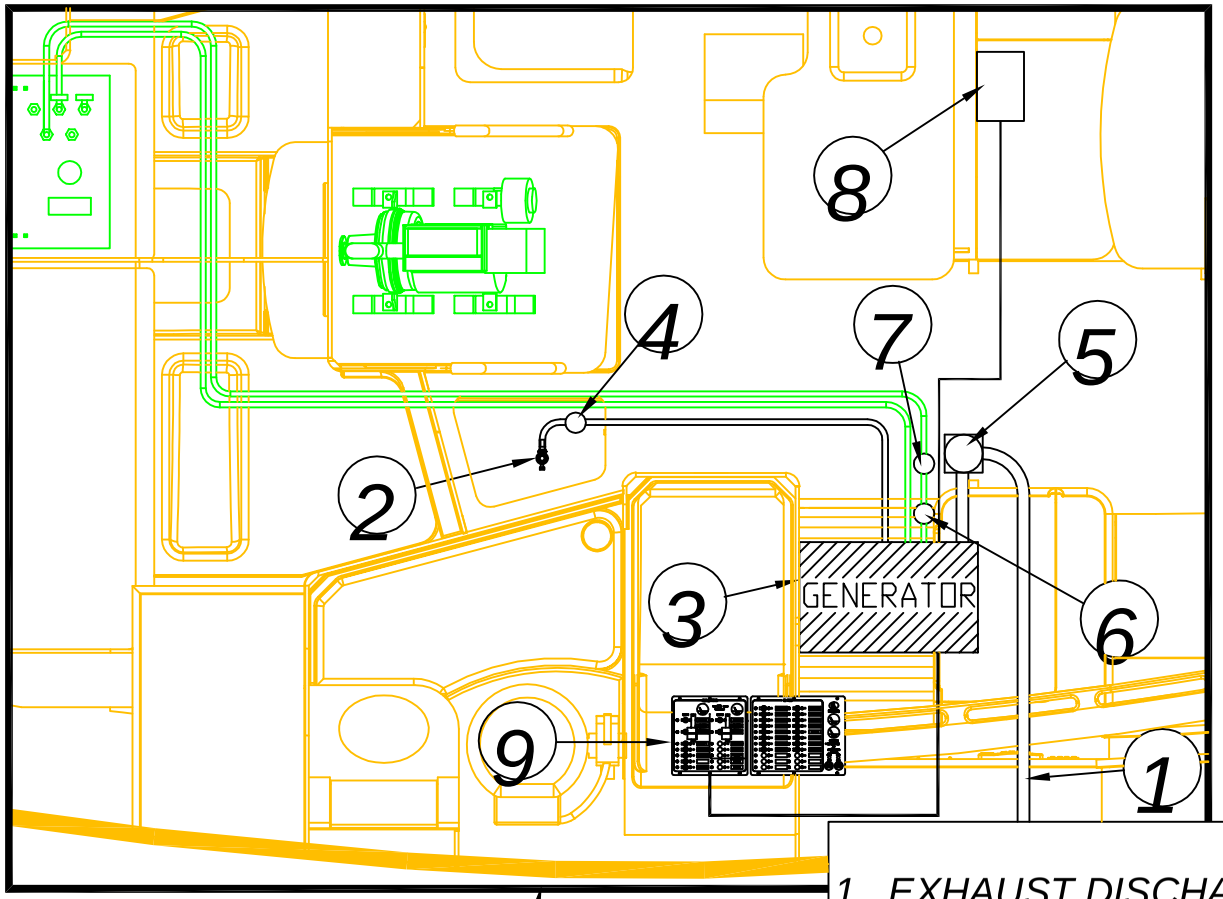

NOTE: SEE PANDA FISHER 8 kw GENERATOR MANUAL FOR SCHEMATICS.

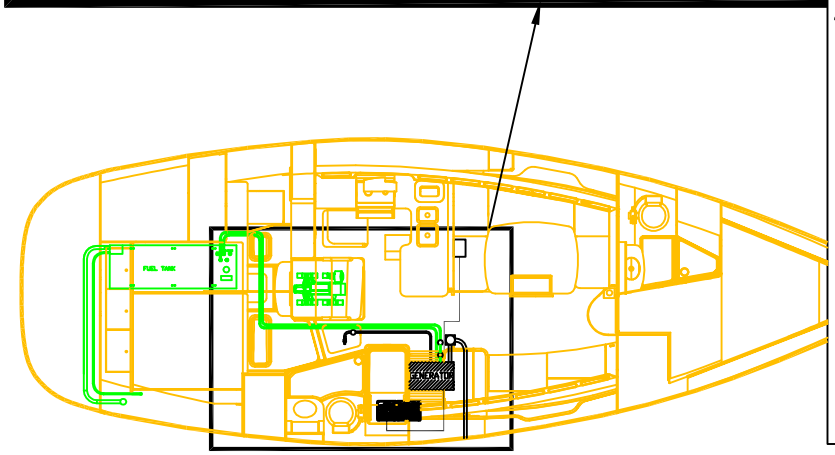

1. EXHAUST DISCHARGE THRUHULL
2. WATER PICKUP (GENERATOR COOLING SYSTEM)
3. GENERATOR
4. SEA STRAINER
5. WATERLOCK MUFFLER
6. FUEL FILTER
7. FUEL PUMP
8. VOLTAGE CONTROL BOX
9. MAIN ELECTRICAL PANEL

DRAWING TITLE: OPTIONAL GENERATOR SYSTEM LAYOUT	
DRAWING NO. 4268063D-2	REVISION NO. None
DRAWN BY: ENG	DATE: 07/11/02

This document discloses information for which HUNTER MARINE CORP. has proprietary rights.

HUNTER

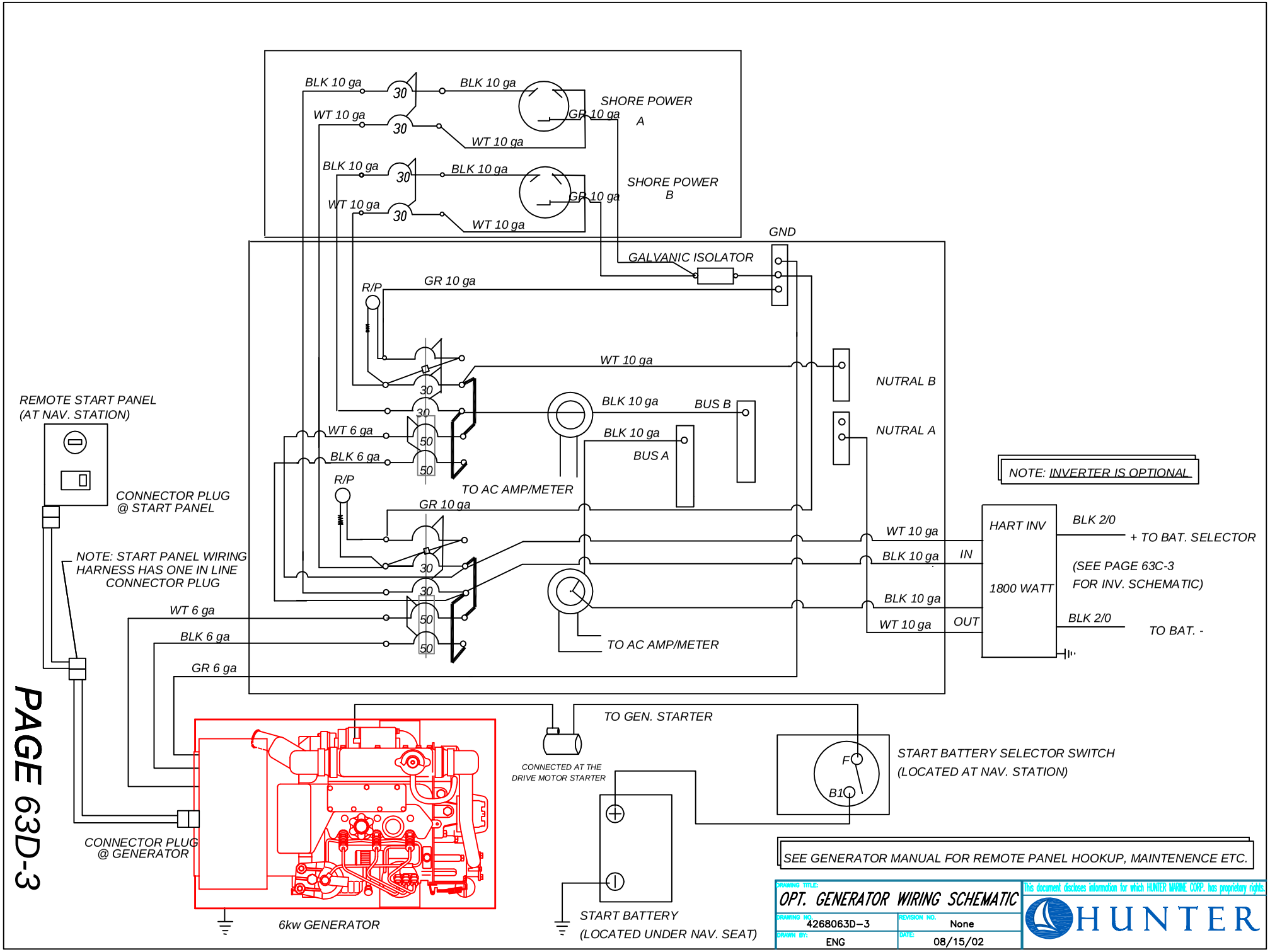
BLK 10 ga
30
BLK 10 ga
WT 10 ga
30
GR 10 ga
SHORE POWER
A
WT 10 ga
BLK 10 ga
30
BLK 10 ga
WT 10 ga
30
GR 10 ga
SHORE POWER
B
WT 10 ga
GND
GALVANIC ISOLATOR
R/P
GR 10 ga
WT 10 ga
NUTRAL B
30
30
BLK 10 ga
BUS B
WT 6 ga
50
BLK 10 ga
BUS A
NUTRAL A
BLK 6 ga
50
REMOTE START PANEL
(AT NAV. STATION)
R/P
TO AC AMP/METER
GR 10 ga
NOTE: INVERTER IS OPTIONAL
CONNECTOR PLUG
@ START PANEL
WT 10 ga
HART INV
BLK 2/0
+ TO BAT. SELECTOR
NOTE: START PANEL WIRING
HARNESS HAS ONE IN LINE
CONNECTOR PLUG
BLK 10 ga
IN
(SEE PAGE 63C-3
FOR INV. SCHEMATIC)
1800 WATT
WT 6 ga
30
30
BLK 10 ga
BLK 2/0
BLK 6 ga
50
WT 10 ga
OUT
TO BAT. -
TO AC AMP/METER
GR 6 ga
50
TO GEN. STARTER
CONNECTED AT THE
DRIVE MOTOR STARTER
START BATTERY SELECTOR SWITCH
(LOCATED AT NAV. STATION)
F
B1
CONNECTOR PLUG
@ GENERATOR
SEE GENERATOR MANUAL FOR REMOTE PANEL HOOKUP, MAINTENENCE ETC.
6kw GENERATOR
START BATTERY
(LOCATED UNDER NAV. SEAT)
DRAWING TITLE:
OPT. GENERATOR WIRING SCHEMATIC
This document discloses information for which HUNTER MARINE CORP. has proprietary rights.
DRAWING NO.
4268063D-3
REVISION NO.
None
DRAWN BY:
ENG
DATE:
08/15/02
HUNTER

PAGE 63D-3

INVERTER SYSTEM

BASIC OPERATING INSTRUCTIONS: (FOR INVERTING D.C. POWER TO A.C. POWER)

1. TURN THE HOUSE BATTERY SWITCH TO EITHER THE "1, 2, OR BOTH" POSITIONS
2. TURN ON INVERTER REMOTE PANEL AT THE NAVIGATION STATION.
3. TURN ON APPROPRIATE APPLIANCE BREAKER ON A.C. SIDE OF PANEL.

NOTE:
SEE SECTION 63C FOR INVERTER SYSTEM DETAILS

SEE INVERTER MANUAL FOR TECHNICAL DATA, TROUBLESHOOTING, ETC. OPERATING/PROGRAMMING INSTRUCTIONS

DRAWING TITLE: INVERTER SYSTEM INSTRUCTIONS	
DRAWING NO. 4268063E-1	REVISION NO. None
DRAWN BY: ENG	DATE: 07/11/02

This document discloses information for which HUNTER MARINE CORP. has proprietary rights.

HUNTER

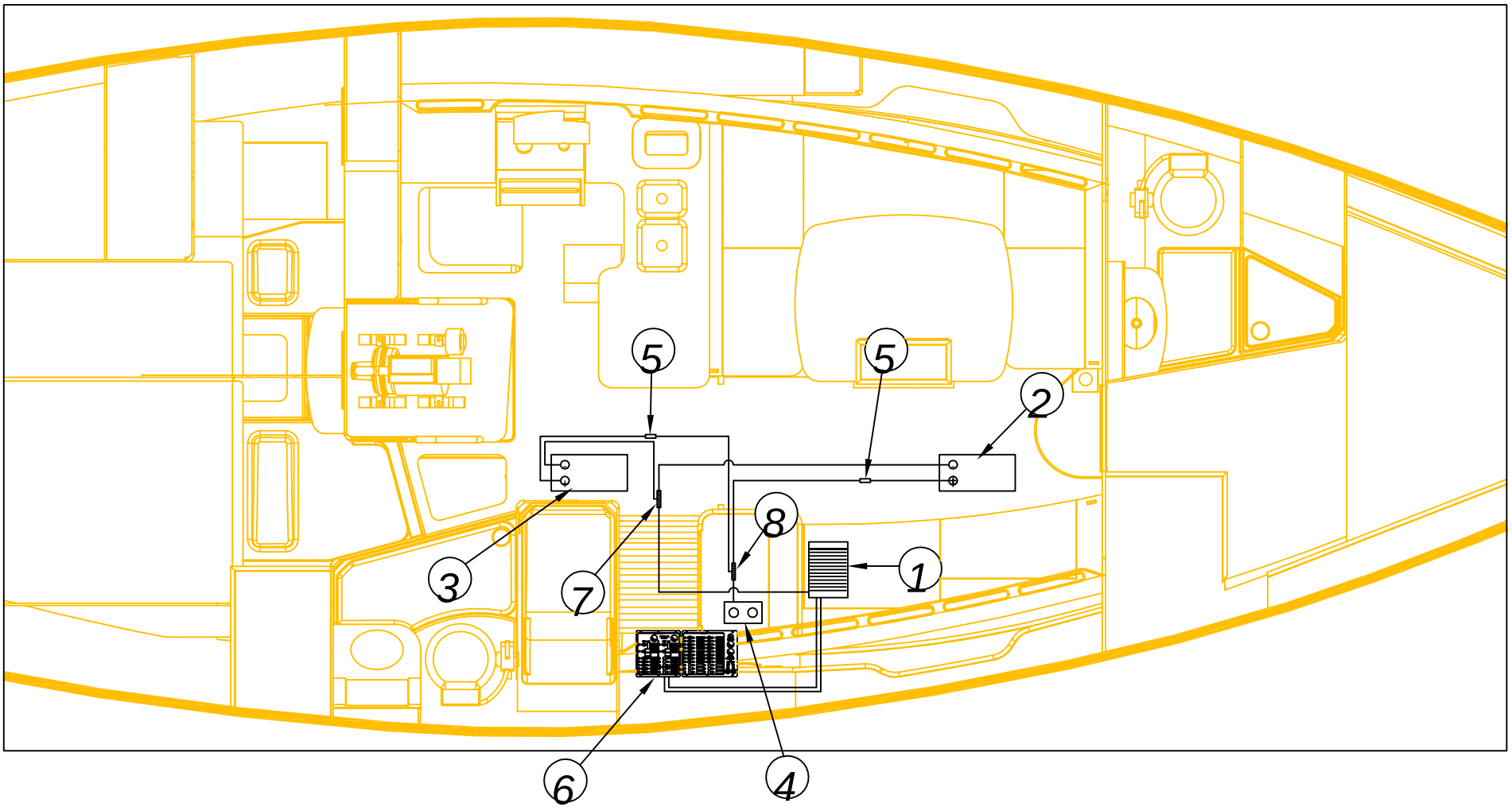

1. INVERTER
2. HOUSE BATTERY (FWD)
3. HOUSE BATTERY (AFT)
4. BATTERY SELECTOR PANEL
5. 300 AMP FUSE
6. MAIN BREAKER PANEL
7. NEGATIVE BUS BAR
8. HOUSE BATTERY STUD BANK

DRAWING TITLE: OPTIONAL INVERTER SYSTEM LAYOUT

DRAWING NO. 4268063E-2 | REVISION NO. None

DRAWN BY: ENG | DATE: 07/11/02

This document discloses information for which HUNTER MARINE CORP. has proprietary rights.

HUNTER

NOTES: WHEN A WASHER AND DRYER IS OPTIONED, A 15 amp BREAKER IS INSTALLED @ THE MAIN BREAKER PANEL, LOCATED @ NAV STATION.

1. WASHER/DRYER UNIT LOCATED IN PORT AFT STATEROOM.
2. DESIGNATED WASHER/DRYER POWER LEADS RUN DOWN THROUGH THE PAN AND FWD AND OVER TO THE MAIN POWER PANEL.
3. HOT/COLD WATER SUPPLY LINES (15mm) FROM WATER MANIFOLD
4. HOT/COLD WATER SUPPLY LINES (15mm) TO AFT COCKPIT SHOWER
5. (3/4"/38.1mm) WASHER DRAIN DISCHARGE HOSE
6. (3/4"/38.1mm) WASHER DRAIN DISCHARGE SEACOCK

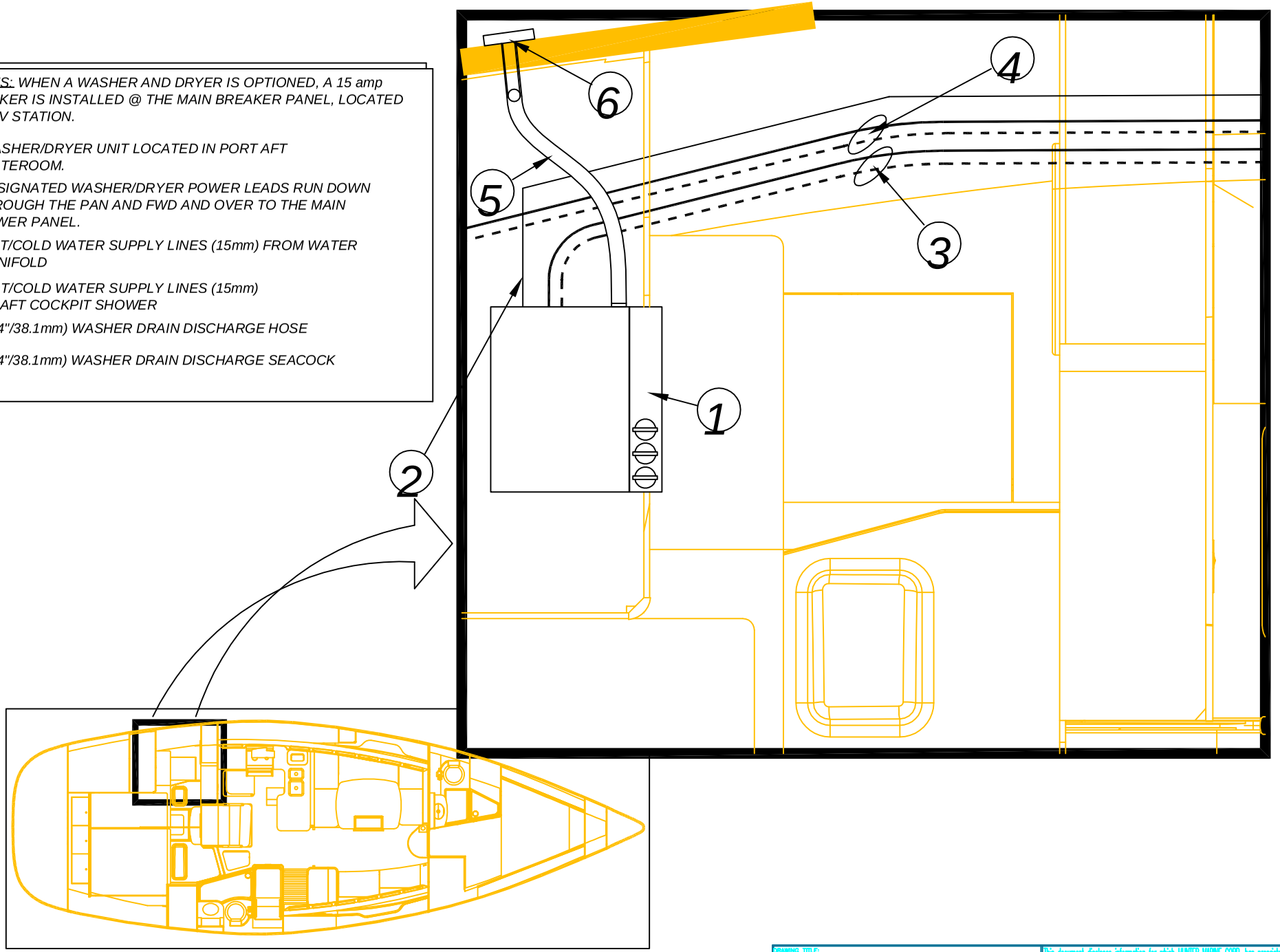

PAGE 63F-1

DRAWING TITLE: OPTIONAL WASHER/DRYER LAYOUT	
DRAWING NO. 4268063F-1	REVISION NO. None
DRAWN BY: ENG	DATE: 07/11/02

This document discloses information for which HUNTER MARINE CORP. has proprietary rights.

HUNTER

NOTES: WHEN AN ICE MAKER IS OPTIONED, A 15 amp BREAKER IS INSTALLED @ THE MAIN BREAKER PANEL, LOCATED @ NAV STATION.

1. ICE MAKER UNIT
2. DESIGNATED ICE MAKER POWER LEADS RUN DOWN THROUGH THE PAN AND FWD AND OVER TO THE MAIN POWER PANEL.
3. HOT/COLD WATER SUPPLY LINES (15mm) FROM WATER MANIFOLD FOR OPTIONAL WASHER/DRYER
4. HOT/COLD WATER SUPPLY LINES (15mm) TO AFT COCKPIT SHOWER
5. COLD WATER SUPPLY LINE (15mm) FOR ICE MAKER
6. SHORE INLET SUPPLY LINE (15mm) TO WATER MANIFOLD

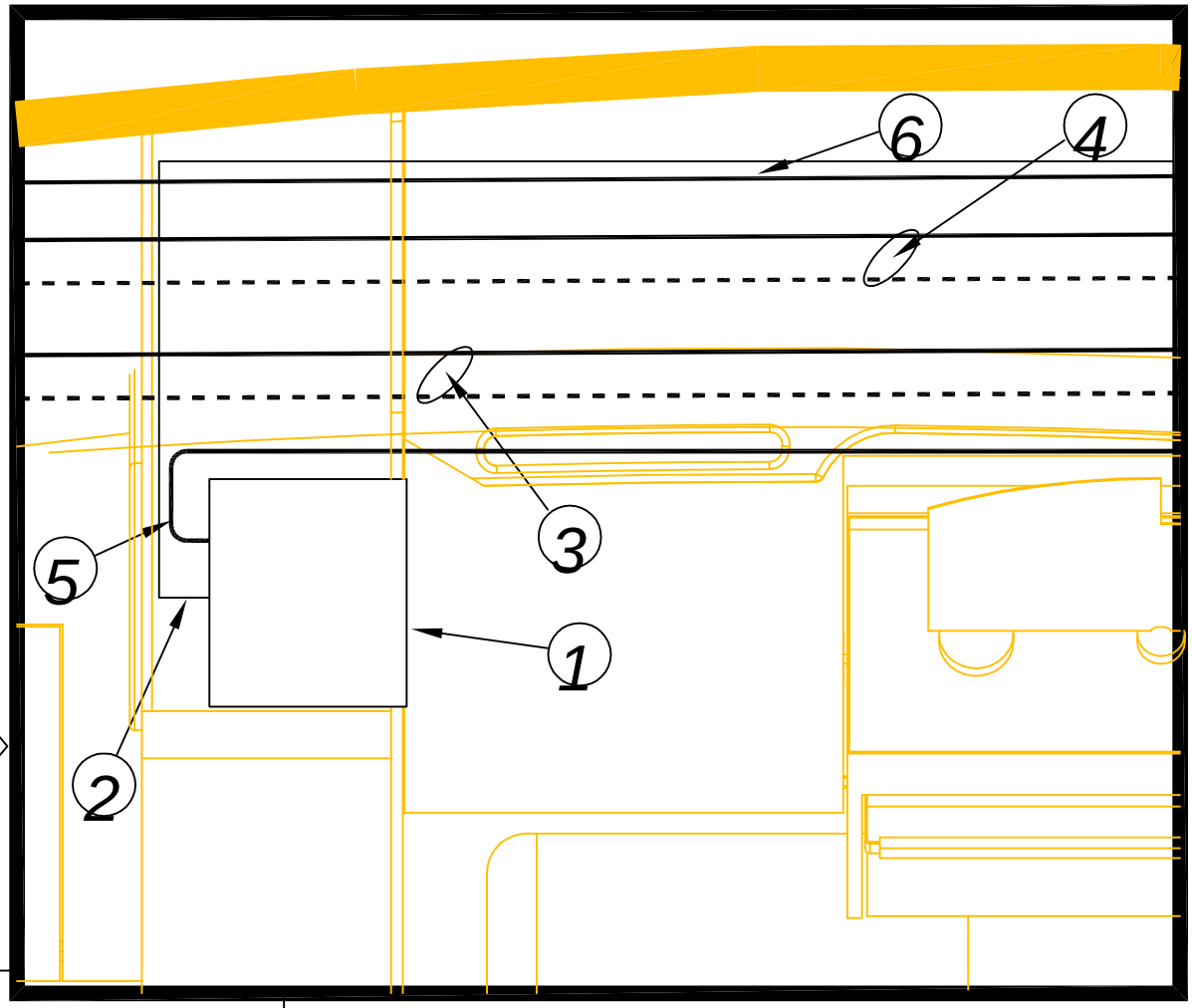

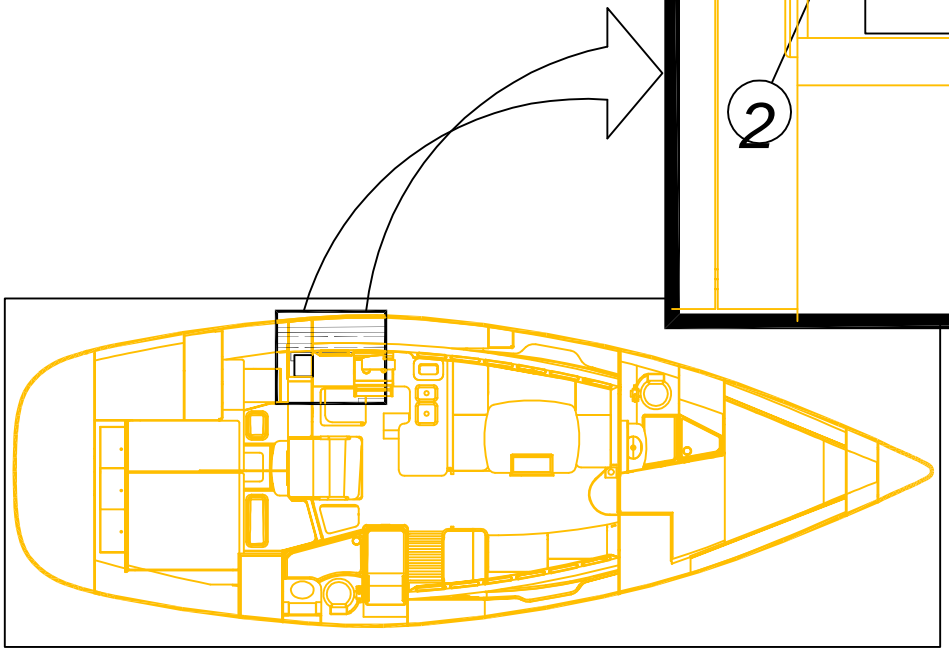

PAGE 63F-2

DRAWING TITLE: OPTIONAL ICE MAKER LAYOUT	
DRAWING NO. 4268063F-2	REVISION NO. None
DRAWN BY: ENG	DATE: 10/04/02

This document discloses information for which HUNTER MARINE CORP. has proprietary rights.

HUNTER

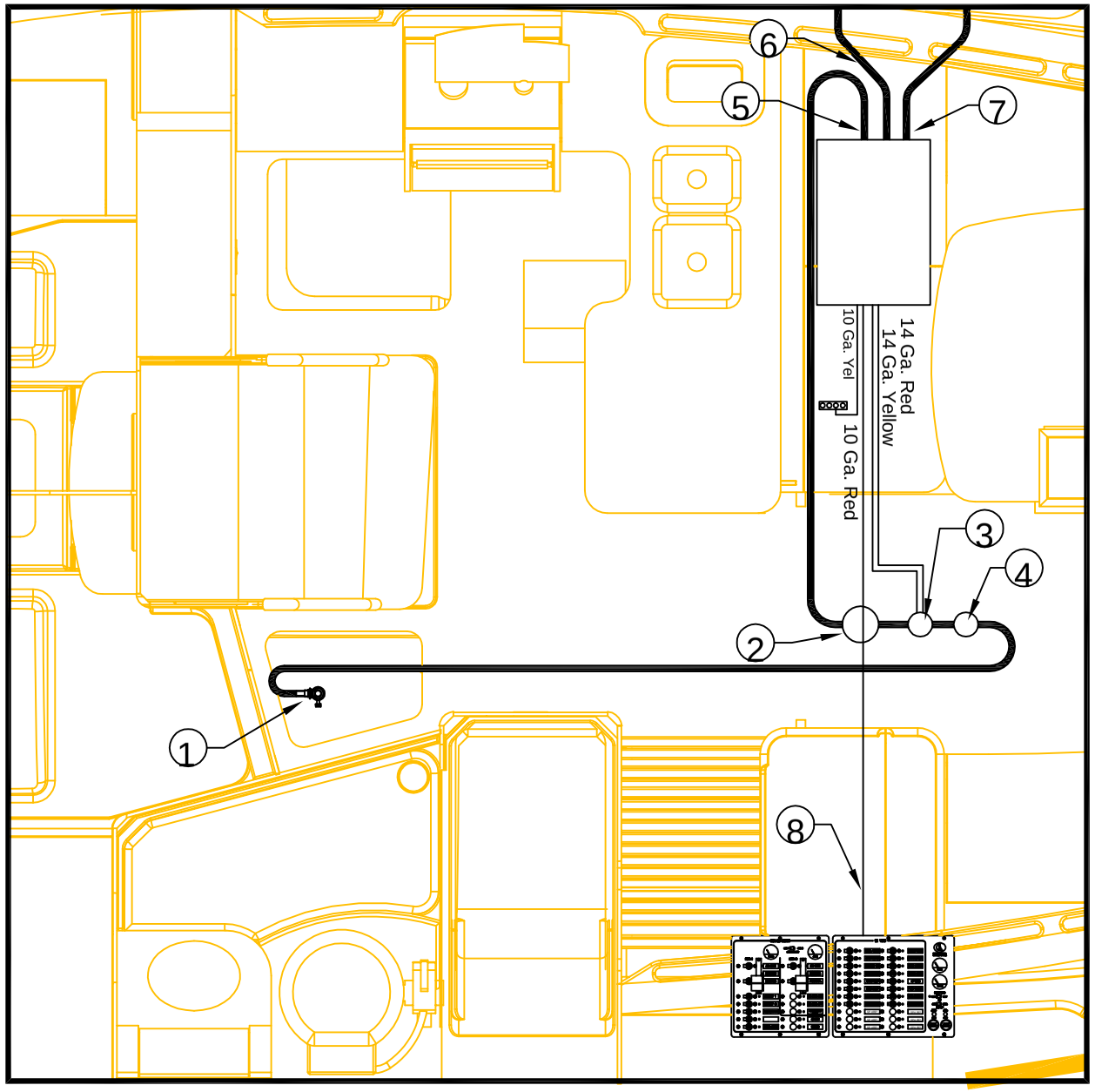

1. *3/4" BALL VALVE (SEA WATER IN)*
2. *FILTER*
3. *BOOSTER PUMP*
4. *SEA STRAINER*
5. *WATER IN TO WATER MAKER*
6. *TO 1/2" BALL VALVE (SYSTEM FLUSH)*
7. *FRESH WATER OUT TO WATER TANK VENT HOSE*
8. *POWER LEAD FROM 40 AMP BREAKER AT PANEL*

NOTE:

SEE WATER MAKER MANUAL FOR OPERATING INSTRUCTIONS

DRAWING TITLE: *OPTIONAL FRESH WATER MAKER*		
DRAWING NO. 4268063F-3	REVISION NO. None	
DRAWN BY: ENG	DATE: 02/21/03	

This document discloses information for which HUNTER MARINE CORP. has proprietary rights.

HUNTER

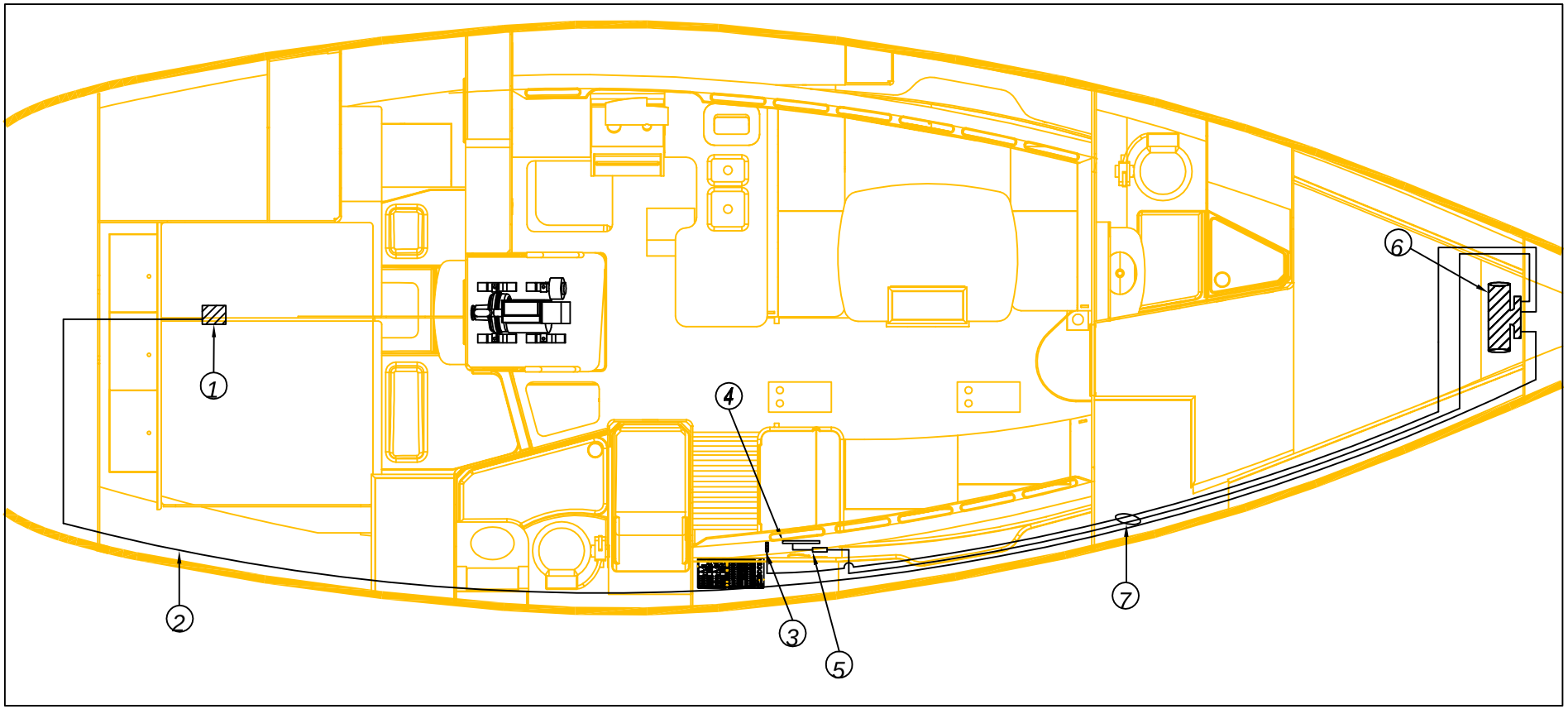

1. BOW THRUSTER REMOTE CONTROL LOCATION (ON COCKPIT CONSOLE)
2. REMOTE WIRE RUNS (THRU HEADLINER) 4 WIRES
3. NEGATIVE STUD LOCATION (BEHIND BATTERY SWITCH PANEL)
4. BATTERY SWITCH PANEL
5. 250 AMP FUSE
6. BOW THRUSTER
7. BOW THURSTER MOTOR CABLES

IMPORTANT NOTES:

1. SEE PAGE 63G-2 FOR MORE DETAILS AND A SCHEMATIC FOR THE OPTIONAL BOW THRUSTER AND ITS COMPONENTS.
2. SEE BOW THRUSTER OWNERS MAUNAL FOR GUIDELINES, INSTRUCTIONS AND MAINTENANCE. (EX: OIL FILL RESERVOIR AND BATTERY STATUS WHEN NOT IN USE.)

DRAWING TITLE: OPTIONAL BOW THRUSTER SYSTEM LAYOUT	
DRAWING NO. 4268063G-1	REVISION NO. None
DRAWN BY: ENG	DATE: 07/11/02

This document discloses information for which HUNTER MARINE CORP. has proprietary rights.

HUNTER

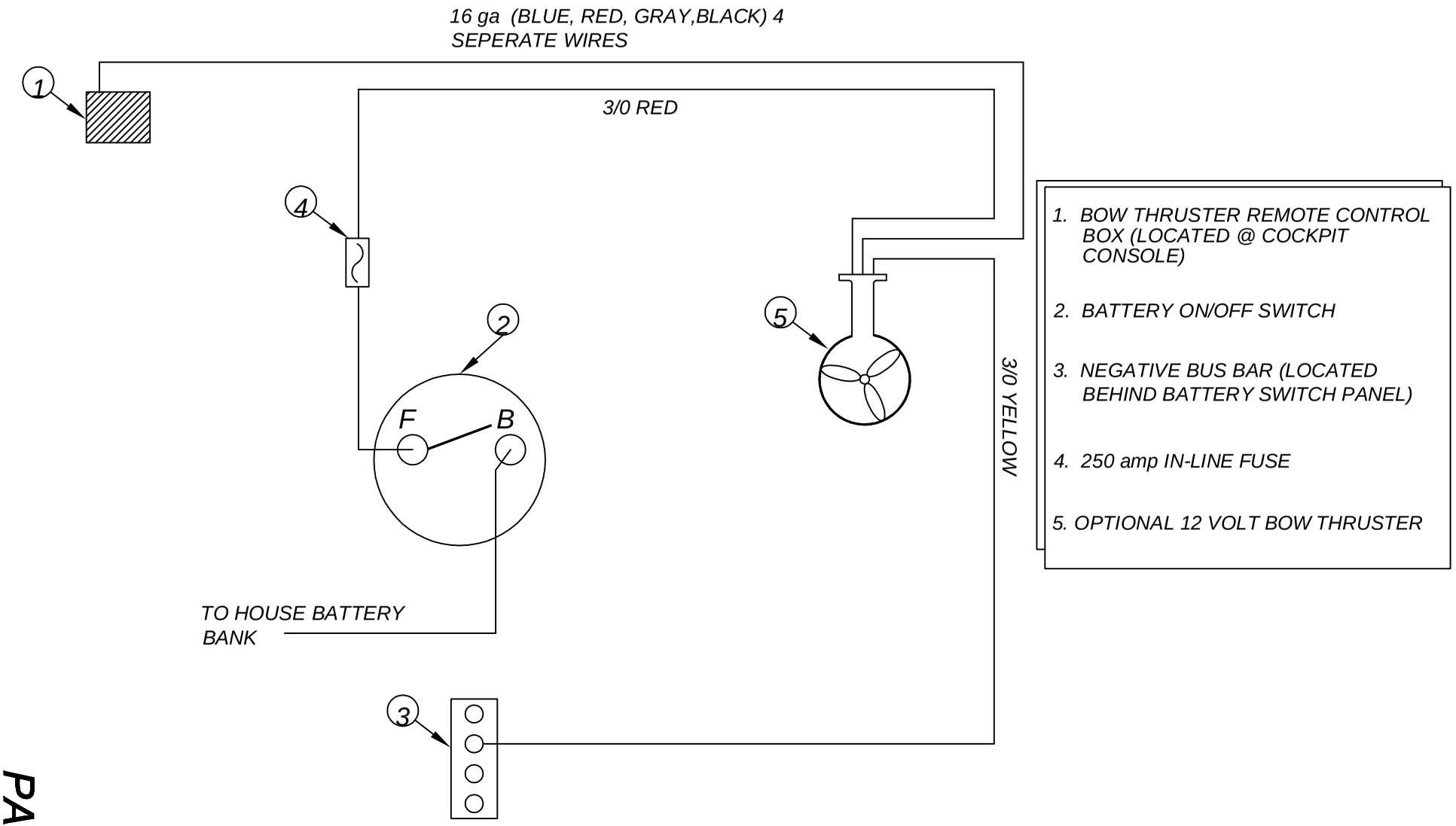

1. BOW THRUSTER REMOTE CONTROL BOX (LOCATED @ COCKPIT CONSOLE)
2. BATTERY ON/OFF SWITCH
3. NEGATIVE BUS BAR (LOCATED BEHIND BATTERY SWITCH PANEL)
4. 250 amp IN-LINE FUSE
5. OPTIONAL 12 VOLT BOW THRUSTER

PAGE 63G-2

DRAWING TITLE: OPTIONAL BOW THRUSTER SCHEMATIC	
DRAWING NO.: 4268064G-2	REVISION NO.: None
DRAWN BY: ENG	DATE: 08/15/02

This document discloses information for which HUNTER MARINE CORP. has proprietary rights.

HUNTER

PANEL COMPONENTS SHOWN AS VIEWED WHEN PANEL IS OPEN

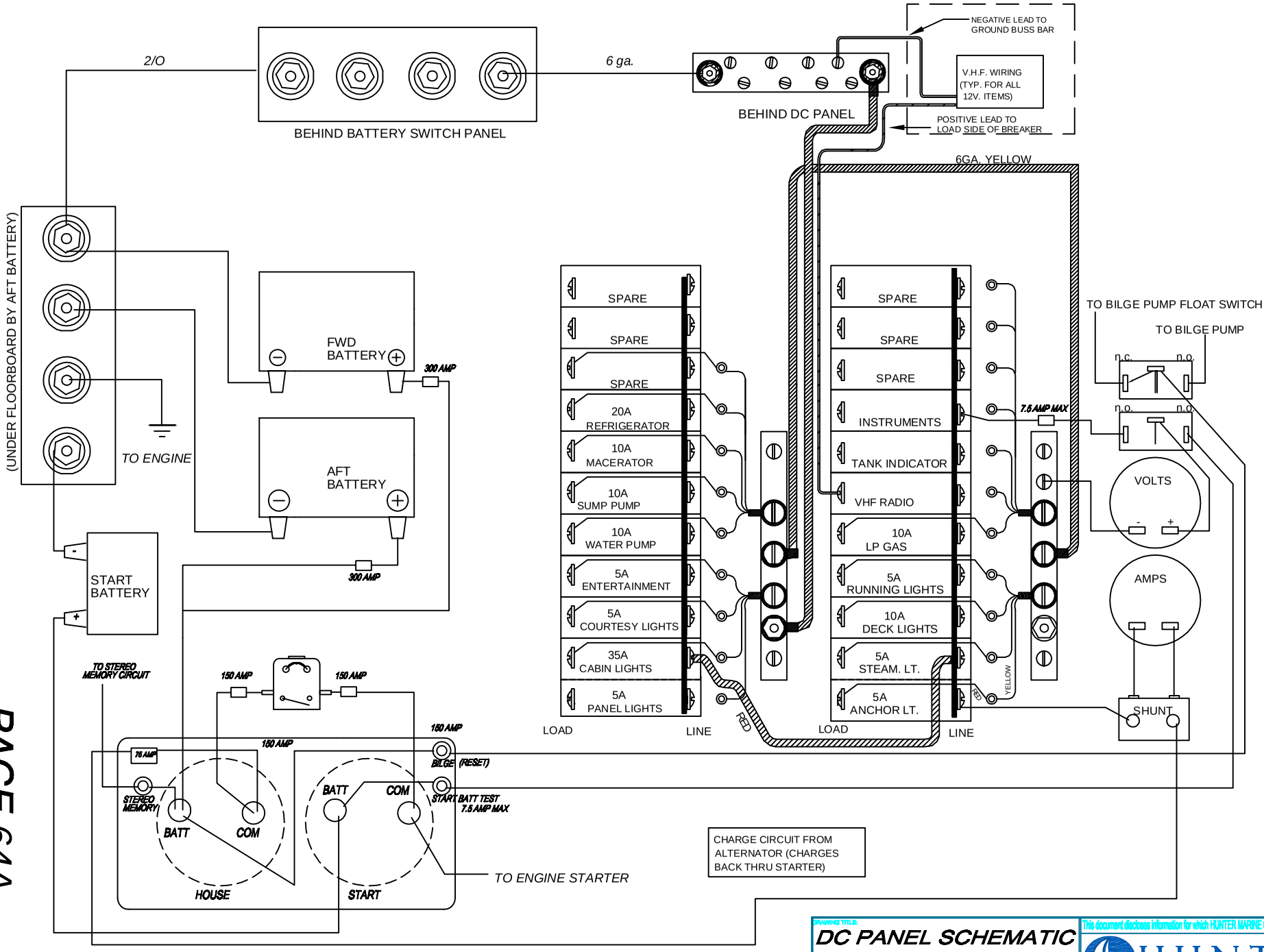

PAGE 64A

DRAWING TITLE: DC PANEL SCHEMATIC

DRAWING NO.	REVISION NO.
4268064A	None
DRAWN BY: ENG	DATE: 08/15/02

This document discloses information for which HUNTER MARINE CORP. has proprietary rights.

HUNTER

EXAMPLE SWITCH PANEL WIRING (PARALLEL CIRCUITS)

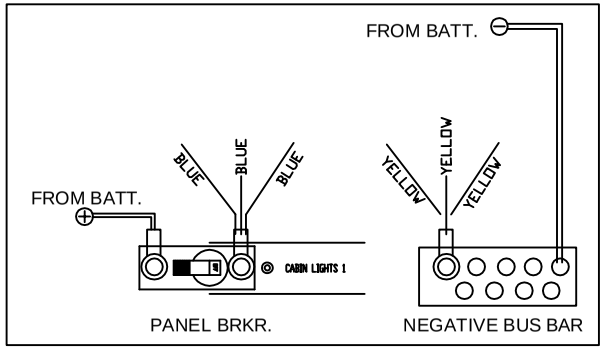

EACH CIRCUIT IN PARALLEL, BLUE (LOAD TO BREAKER) AND –YELLOW NEGATIVE TO NEGATIVE BUS BAR (SEE EX.)

- SWIVEL LIGHTS
- DOME LIGHTS
- RECESSED LIGHTS
- MAP LIGHT
- FLUORESCENTS
- C COURTESY LIGHTS
- VANITY LIGHTS
- LIGHT SWITCH

EXAMPLE LIGHT WIRING (PARALLEL CIRCUIT)

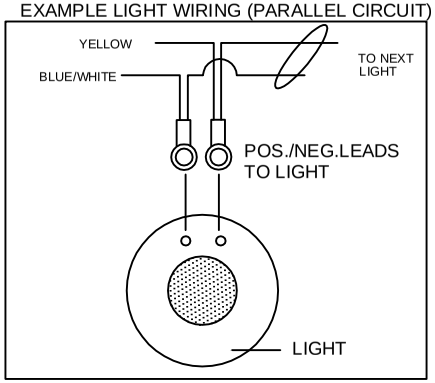

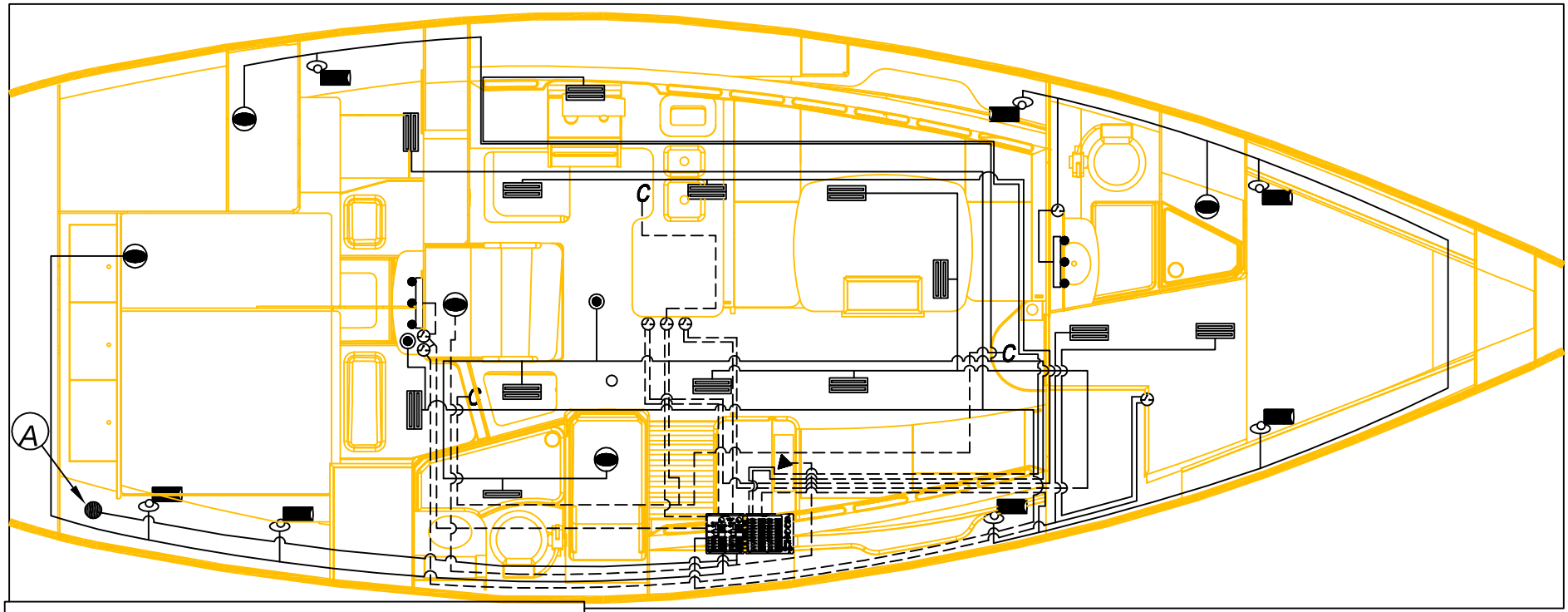

PAGE 64B

WIRE RUNS THROUGH HEADLINER

WIRE RUNS THROUGH HULL

A TO ARCH LIGHT (PROVIDED WITH COCKPIT STEREO OPTION)

V-BERTH LIGHTS
Q-BERTH LIGHTS
GALLEY LIGHTS

MAIN SALON LIGHTS
MISC. LIGHTS
COURTESY LIGHTS

DRAWING TITLE: 12VDC LIGHTING LAYOUT

DRAWING NO.: 4268064B | REVISION NO.: NONE

DRAWN BY: ENG | DATE: 7/16/02

This document discloses information for which HUNTER MARINE CORP. has proprietary rights.

HUNTER

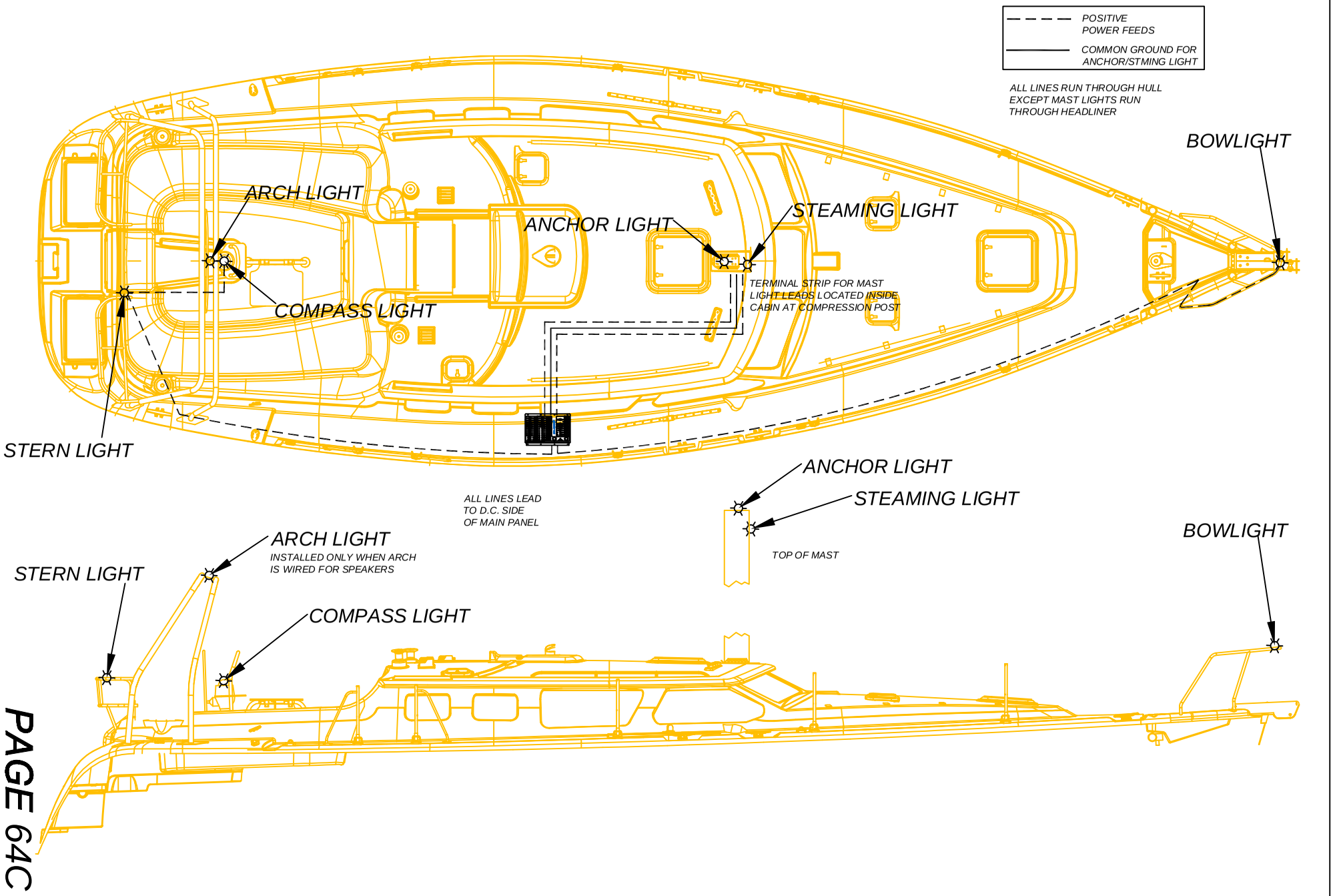

PAGE 64C

DRAWING TITLE: 12V.D.C. EXTERIOR LIGHTS LAYOUT	
DRAWING NO. 4268064C	REVISION NO. None
DRAWN BY: ENG	DATE: 07/11/02

This document discloses information for which HUNTER MARINE CORP. has proprietary rights.

HUNTER

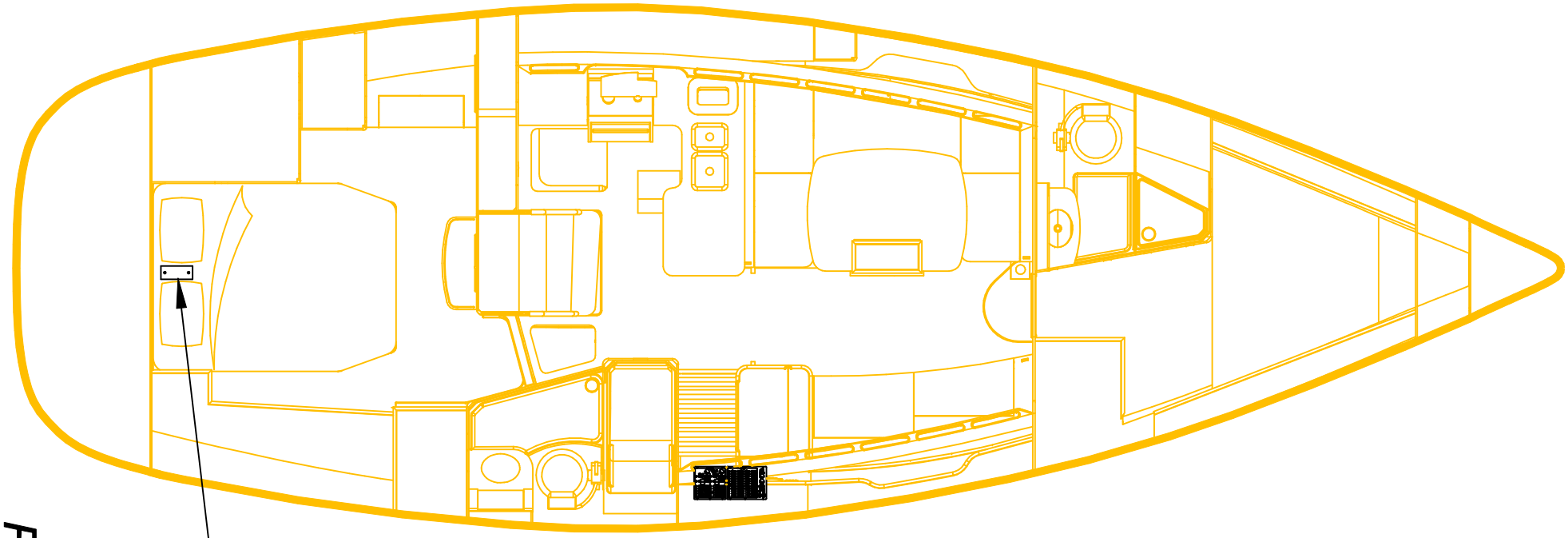

PAGE 64D

DRAWING TITLE: OPTIONAL DYNAPLATE GROUND LAYOUT	
DRAWING NO. 4268064D	REVISION NO. None
DRAWN BY: ENG	DATE: 8/15/02

This document discloses information for which HUNTER MARINE CORP. has proprietary rights.

HUNTER

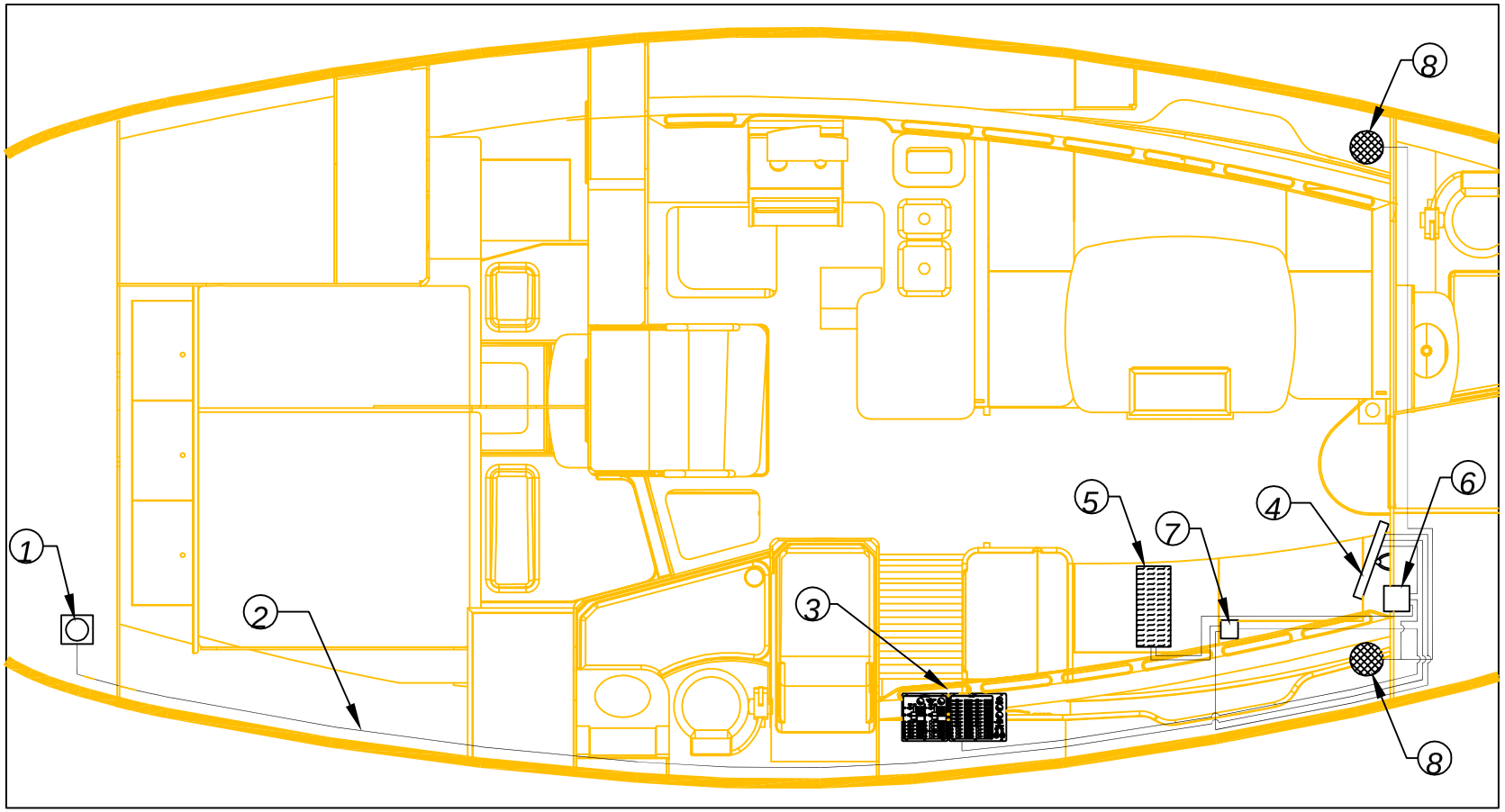

① CABLE/PHONE INLET	⑤ SUB-WOOFER
② CABLE LEAD	⑥ BOSE 3-2-1
③ AC/DC MAIN PANEL	⑦ 400 WATT INVERTER
④ 15" FLAT SCREEN MONITOR	⑧ STEREO SPEAKERS

PAGE 64E-1

DRAWING TITLE: BOSE 3-2-1 LAYOUT		This document discloses information for which HUNTER MARINE CORP. has proprietary rights.
DRAWING NO. 4268064E-1	REVISION NO. None	HUNTER
DRAWN BY: ENG	DATE: 09/03/02	

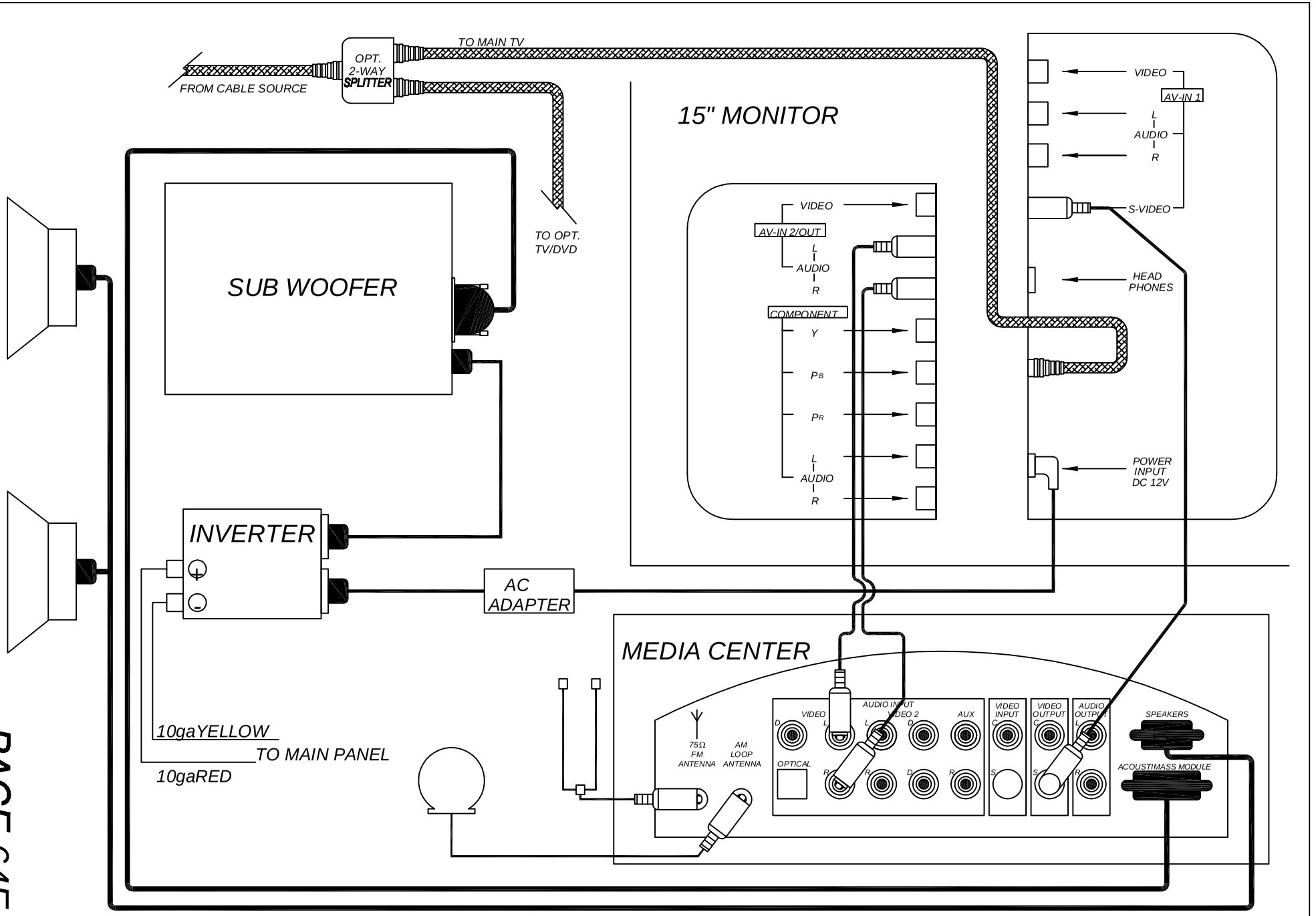

PAGE 64E-2

DRAWING TITLE: BOSE 3-2-1/TV SCHEMATIC

DRAWING NO. 4268064E-2 | REVISION NO. None

DRAWN BY: ENG | DATE: 09/04/02

This document discloses information for which HUNTER MARINE CORP. has proprietary rights.

HUNTER

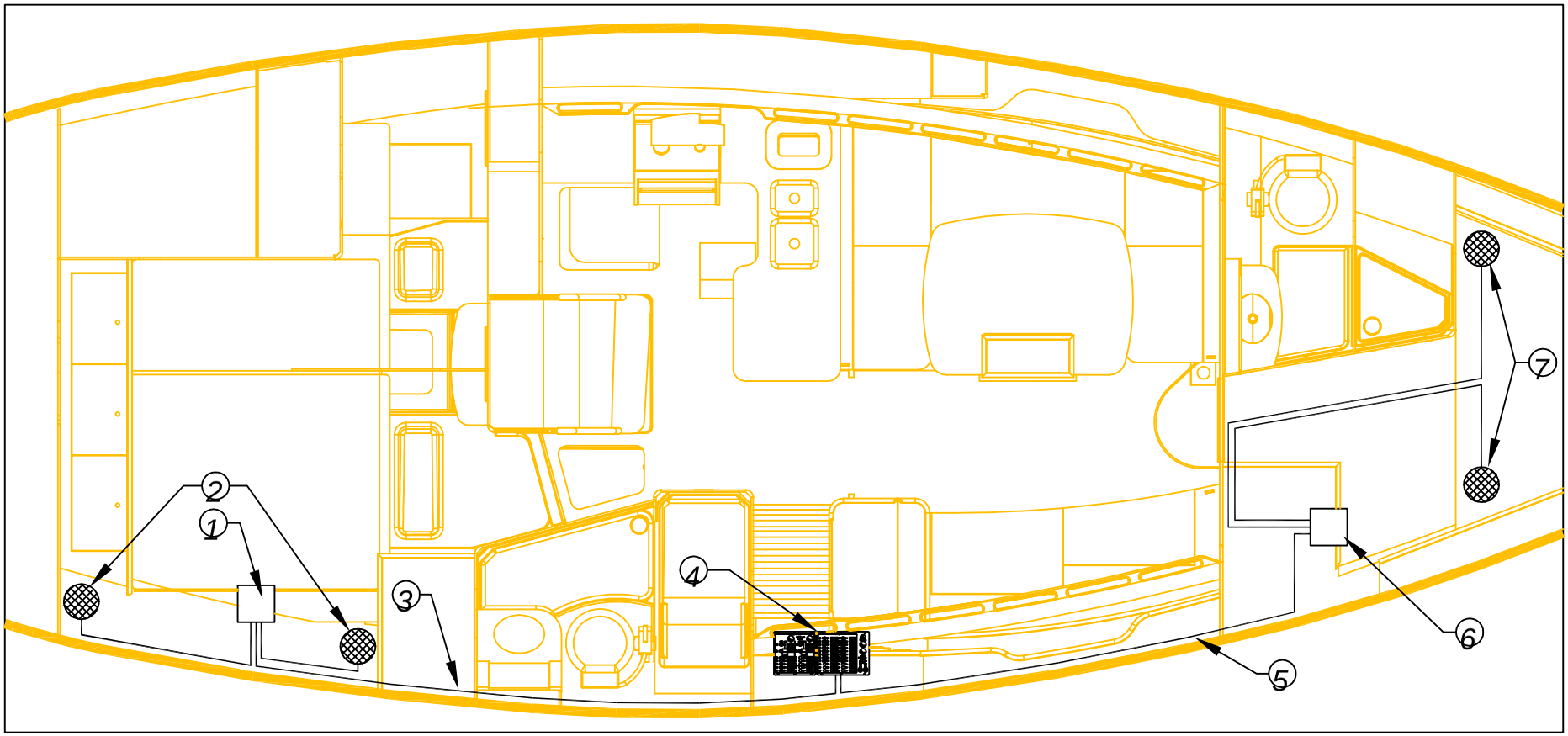

1. AFT STEREO CD PLAYER
2. AFT STEREO SPEAKERS (MOUNTED IN BULKHEADS)
3. AFT STEREO POWER LEAD
4. AC/DC MAIN PANEL
5. FWD STEREO POWER LEAD
6. FWD STEREO CD PLAYER
7. FWD STEREO SPEAKERS (MOUNTED IN HEADLINER)

DRAWING TITLE: OPTIONAL FWD/AFT STEREO LAYOUT		
DRAWING NO. 4268064E-3	REVISION NO. None	
DRAWN BY: ENG	DATE: 09/03/02	

This document discloses information for which HUNTER MARINE CORP. has proprietary rights.

HUNTER

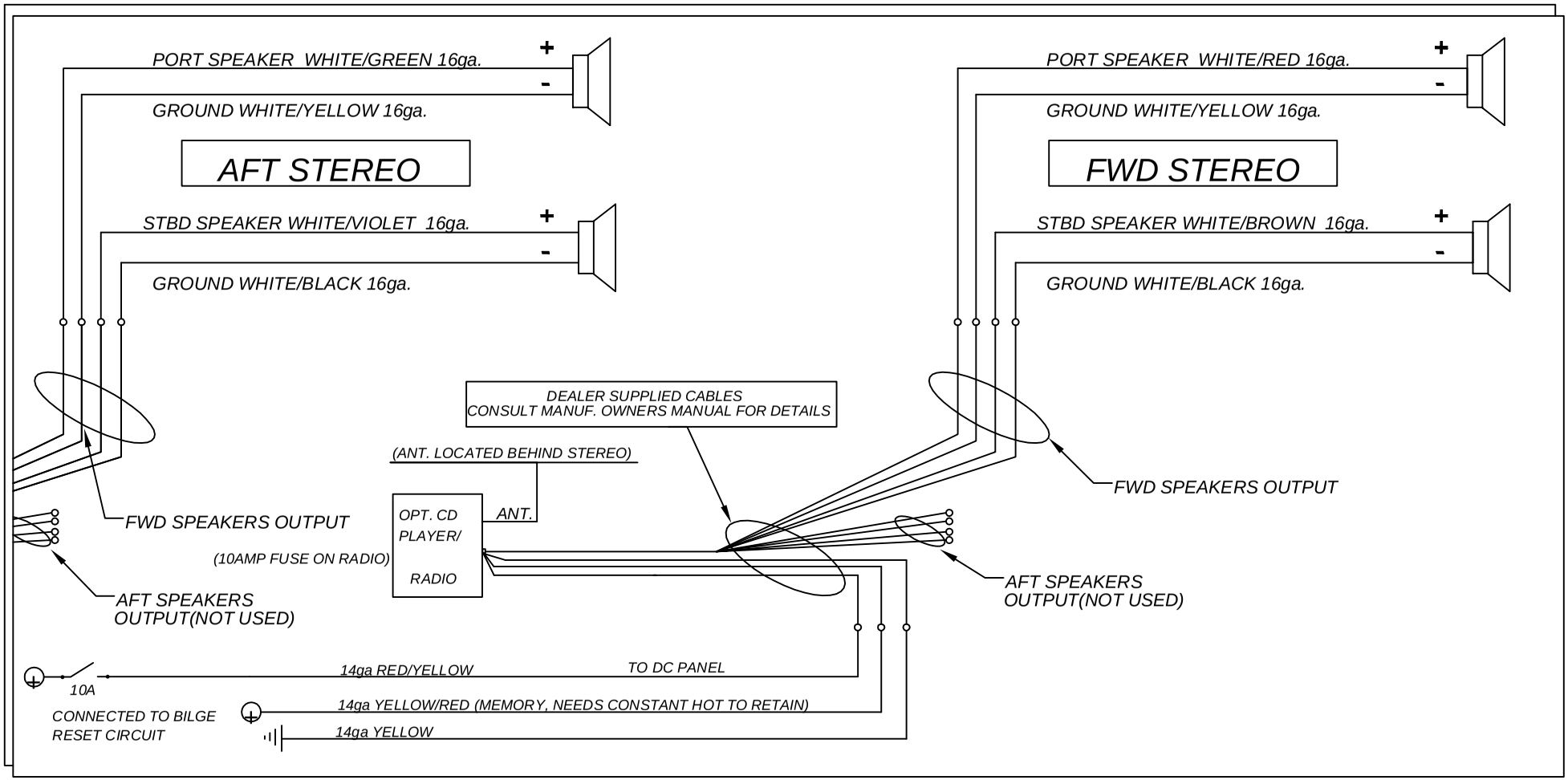

NOTE:

THE FWD AND THE AFT STEREOS ARE WIRED THE SAME. THE ONLY DIFFERENCE IS THE COLOR OF THE POSITIVE SPEAKER LEAD.

DRAWING TITLE:	OPTIONAL FWD/AFT CD STEREO WIRING SCHEMATIC
DRAWING NO.	4268064E-4
REVISION NO.	None
DRAWN BY:	ENG
DATE:	09/09/02

This document discloses information for which HUNTER MARINE CORP. has proprietary rights.

HUNTER

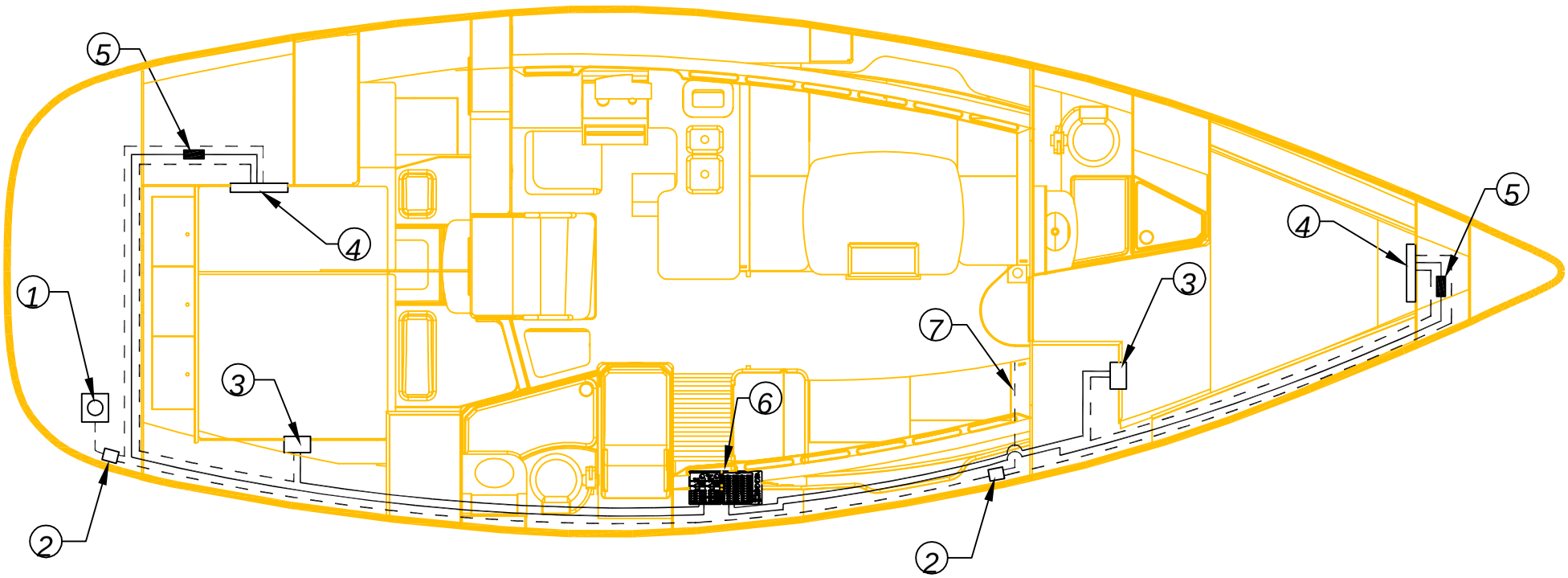

① CABLE/PHONE INLET
② CABLE SPLITTER
③ DVD PLAYER
④ 10" FLAT SCREEN MONITOR
⑤ NOISE REDUCTION FILTER
⑥ AC/DC MAIN PANEL
⑦ TO MAIN TV

CABLE LEADS
POWER LEADS

DRAWING TITLE: OPTIONAL FWD/AFT TV/DVD LAYOUT
DRAWING NO. 4268064E-3
REVISION NO. None
DRAWN BY: ENG
DATE: 09/03/02

This document discloses information for which HUNTER MARINE CORP. has proprietary rights.

HUNTER

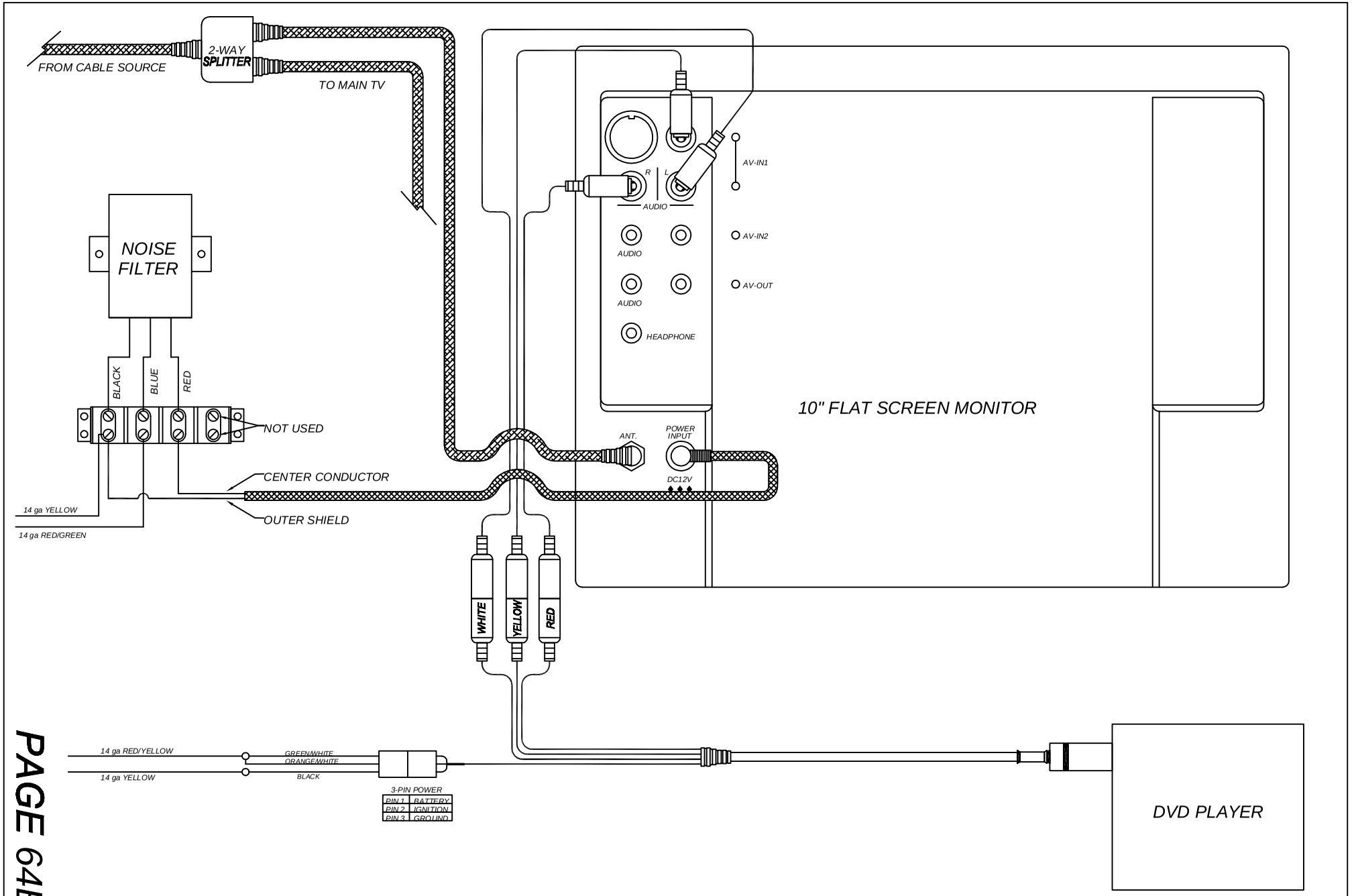

PAGE 64E-6

DRAWING TITLE: OPTIONAL FWD/AFT TV/DVD SCHEMATIC	
DRAWING NO. 4268064E-6	REVISION NO. None
DRAWN BY: ENG	DATE: 09/04/02

This document discloses information for which HUNTER MARINE CORP. has proprietary rights.

HUNTER

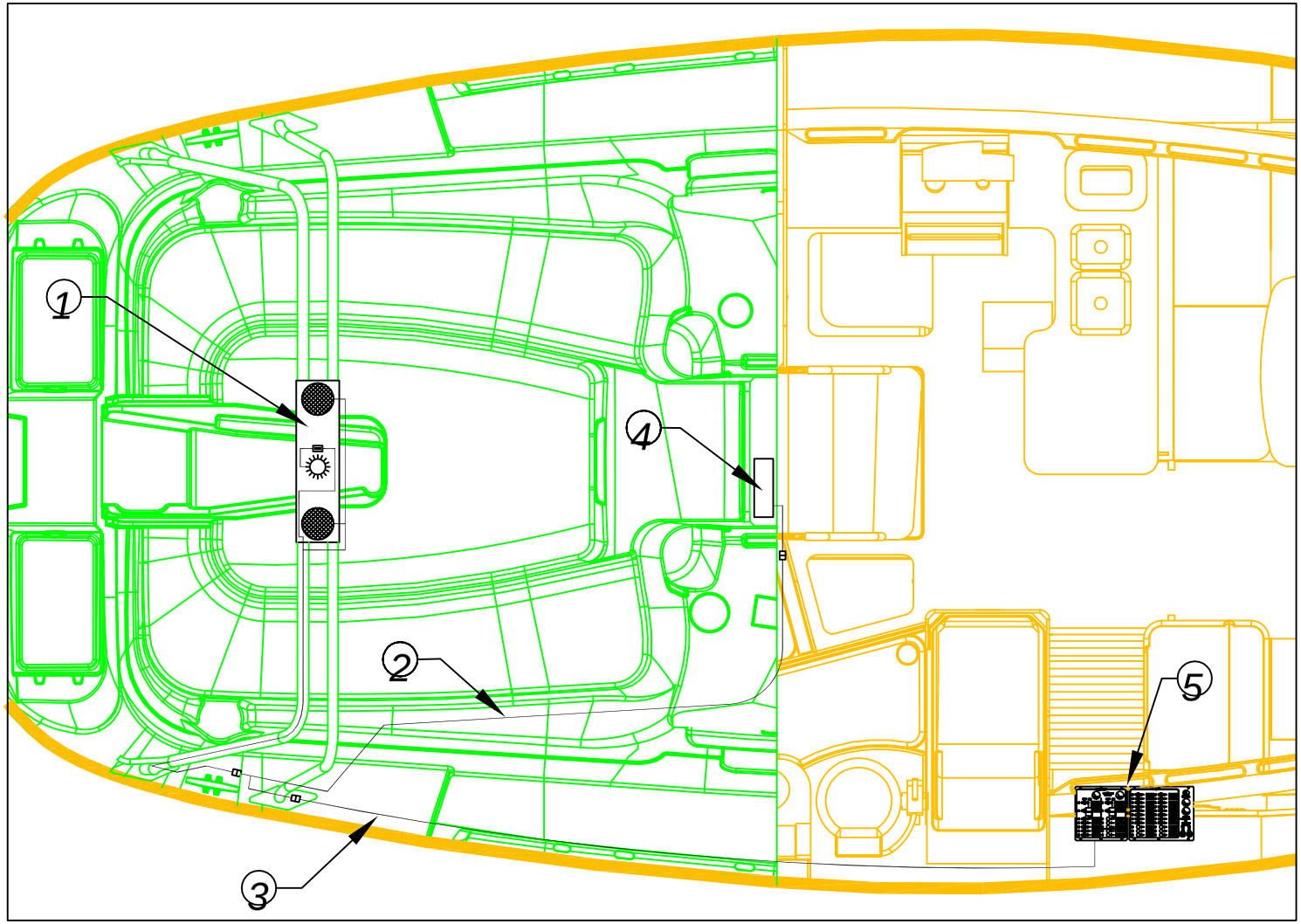

1. SPEAKER POD W/LIGHT (MOUNTED ON ARCH)
2. POWER/SPEAKER WIRE RUN
3. POWER LEADS
4. STEREO CD PLAYER
5. AC/DC MAIN PANEL

DRAWING TITLE: OPTIONAL COCKPIT STEREO

DRAWING NO. 4268064E-7 | REVISION NO. None

DRAWN BY: ENG | DATE: 07/11/02

This document discloses information for which HUNTER MARINE CORP. has proprietary rights.

HUNTER

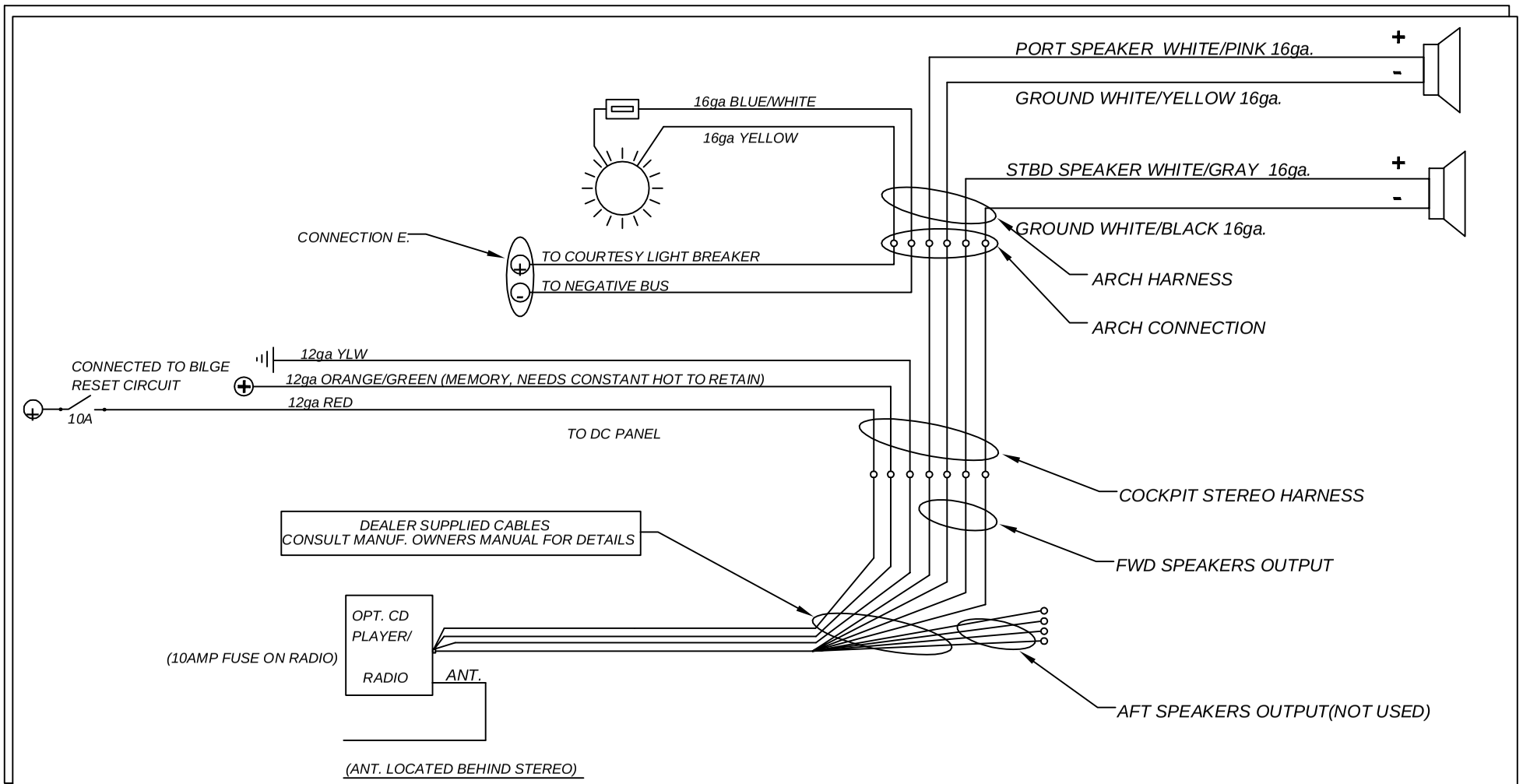

PAGE 64E-8

DRAWING TITLE: OPTIONAL COCKPIT STEREO WIRING SCHEMATIC	
DRAWING NO. 4268064E-8	REVISION NO. None
DRAWN BY: ENG	DATE: 09/09/02

This document discloses information for which HUNTER MARINE CORP. has proprietary rights.

HUNTER

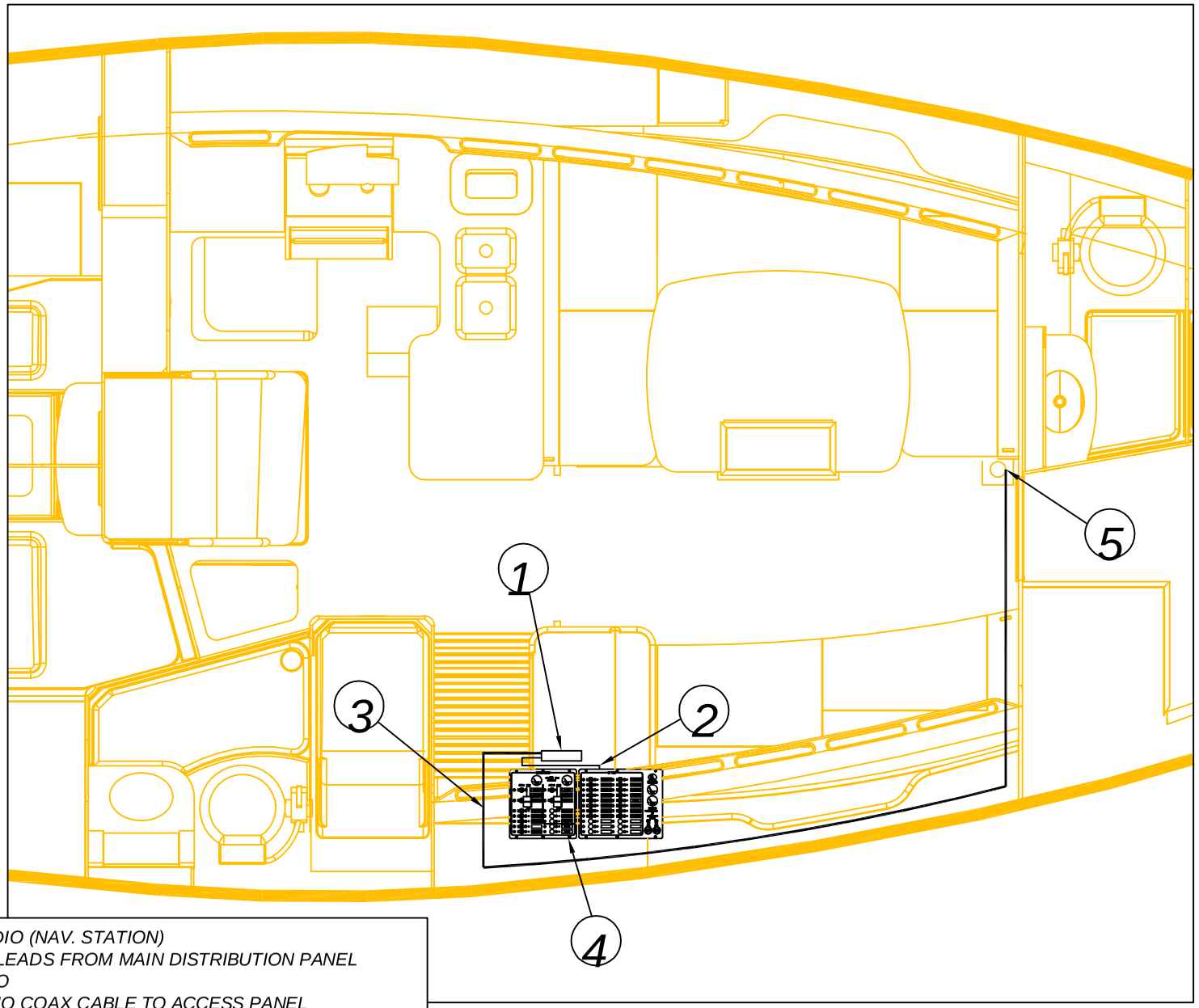

1. V.H.F RADIO (NAV. STATION)
2. POWER LEADS FROM MAIN DISTRIBUTION PANEL TO RADIO
3. VHF RADIO COAX CABLE TO ACCESS PANEL
4. LOCATION OF MAIN DISTRIBUTION PANEL
5. COAX CABLE @ MAST STEP HEADLINER ACCESS PLATE

COAX CABLE RUNS THROUGH THE HEADLINER

PAGE 64F

DRAWING TITLE: VHF RADIO WIRE RUNS LAYOUT

DRAWING NO.	REVISION NO.
4268064F	None
DRAWN BY: ENG	DATE: 07/11/02

This document discloses information for which HUNTER MARINE CORP. has proprietary rights.

HUNTER

A FREEZER UNIT W/ BUILT IN COMPRESSOR
B REFRIGERATOR UNIT
C REFRIGERATION LINES
D REFRIGERATOR COMPRESSOR

NOTE: CONSULT PRODUCT MANUAL FOR OPERATING THE REFRIGERATOR AND FREEZER UNITS.

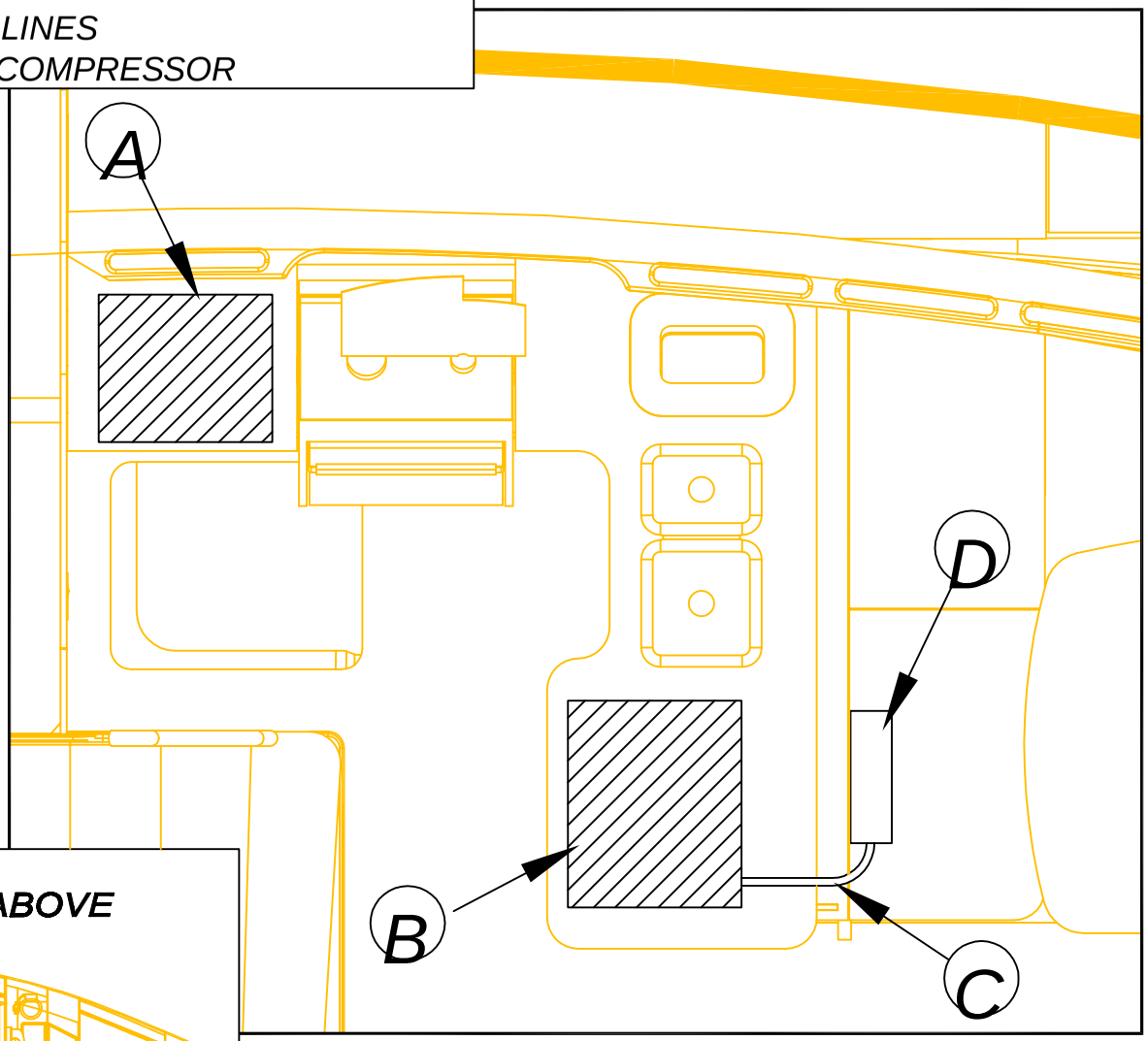

AREA DEPICTED ABOVE

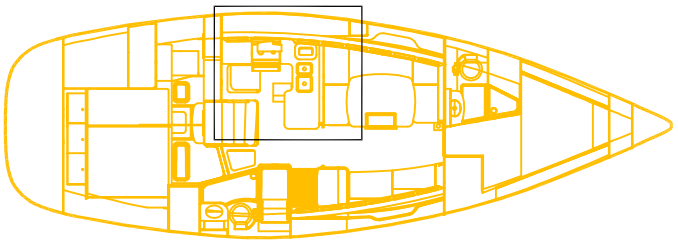

PAGE 64G-1

DRAWING TITLE: REFRIGERATION SYSTEM LAYOUT
DRAWING NO. 4268064G-1
REVISION NO. None
DRAWN BY: ENG
DATE: 07/11/02

This document discloses information for which HUNTER MARINE CORP. has proprietary rights.

HUNTER

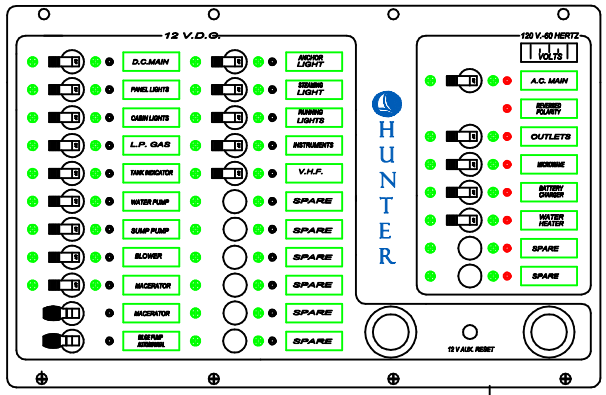

NOTE: SEE REFRIGERATION MANUAL FOR CONTROL BOX HOOKUP DETAILS

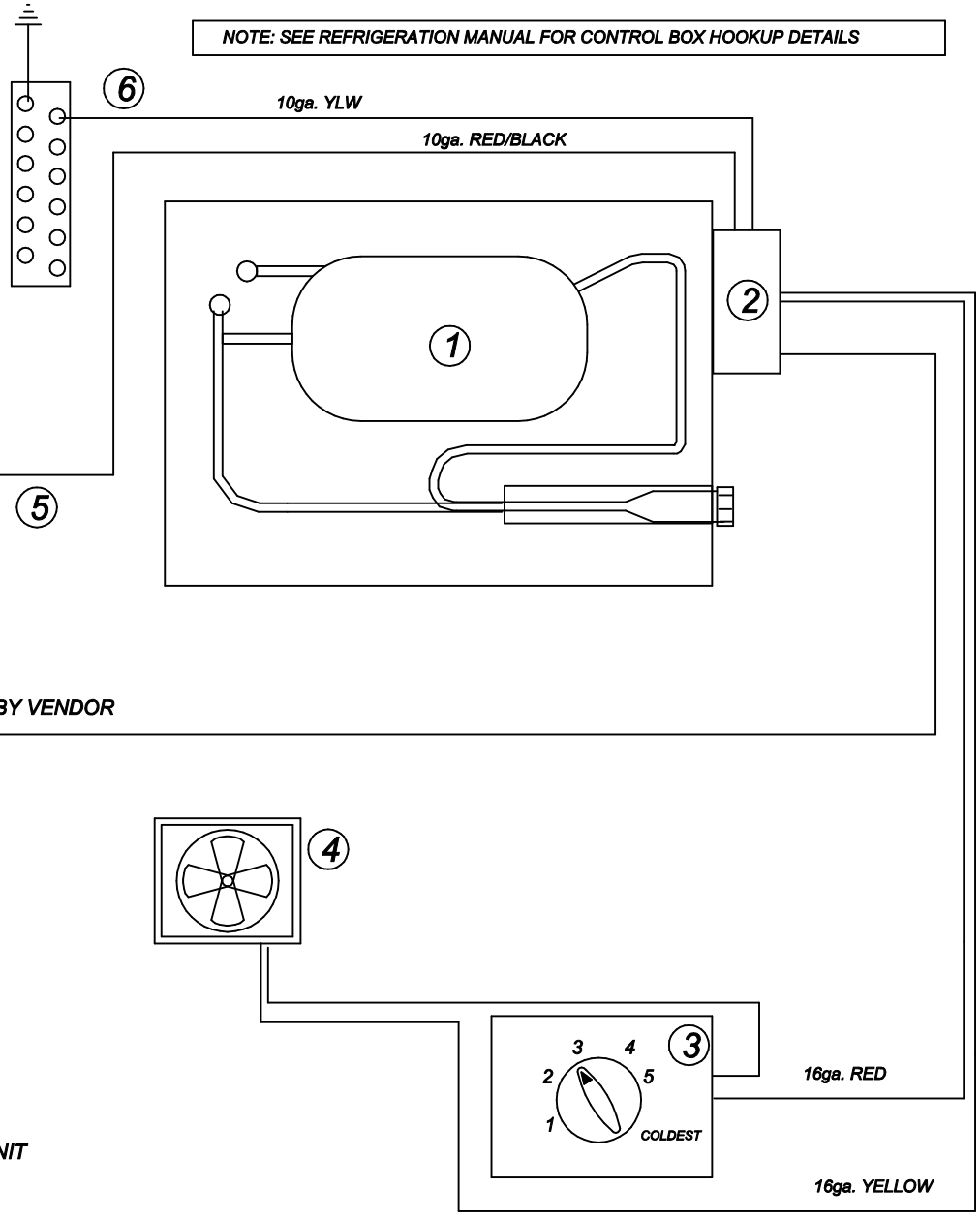

1. REFRIG. COMPRESSOR
2. REF. UNIT CTRL. BOX
3. FRIDGE THERMOSTAT
4. SPILLOVER FAN
5. 12V. + FROM LOAD SIDE OF BRKR. TO REF. UNIT
6. GND. FROM REF. UNIT TO GRD. BUSS BAR
7. EVAPORATOR
8. FREEZER THERMOSTAT
9. EVAPORATOR FAN

PAGE 64G-2

DRAWING TITLE: REFRIGERATION SYSTEM SCHEMATIC	
DRAWING NO. 4268064G-2	REVISION NO. NONE
DRAWN BY: ENG	DATE:

This document discloses information for which HUNTER MARINE CORP. has proprietary rights.

HUNTER

SECTION 64H...OPTIONAL WINDLASS SYSTEM

BASIC OPERATING INSTRUCTIONS:

LOWERING ANCHOR....

①TURN ON BATTERY SWITCH

②TURN ON WINDLASS BRKR. AT MAIN D.C. BREAKER PANEL.

③PUSH WINDLASS "DOWN" BUTTON ON NAV STATION

NOTE: "BUMP" SWITCH UNTIL ANCHOR CLEARS ANCHOR ROLLER AND HULL BEFORE LETTING ANCHOR DOWN FREELY.

RAISING ANCHOR....

①START BOAT ENGINE, THIS WILL ALLOW CONTROL OF BOAT WHEN ANCHOR BECOMES FREE, AS WELL AS REDUCING LOAD ON BATTERY.

③PUSH WINDLASS "UP" BUTTON BEING CAREFUL AS THE ANCHOR APPROACHES THE HULL AND ANCHOR ROLLER. CONTINUE UNTIL THE ANCHOR RESTS IN THE STEMHEAD PROPERLY.

NOTE: IF IT APPEARS THERE IS NO POWER TO THE WINDLASS, CHECK RESET BRKR. IN STBD. AFT COCKPIT LOCKER.
IF WINDLASS BECOMES INOPERABLE ELECTRICALLY, A MANUAL WINCH HANDLE IS SUPPLIED, SEE THE WINDLASS MANUAL SUPPLIED IN YOUR OWNERS MANUAL PACKAGE FOR INSTRUCTIONS.

DRAWING TITLE: WINDLASS OPERATION	
DRAWING NO.: 4268064-1	REVISION NO.: NONE
DRAWN BY: ENG	DATE:

This document discloses information for which HUNTER MARINE CORP. has proprietary rights.

HUNTER

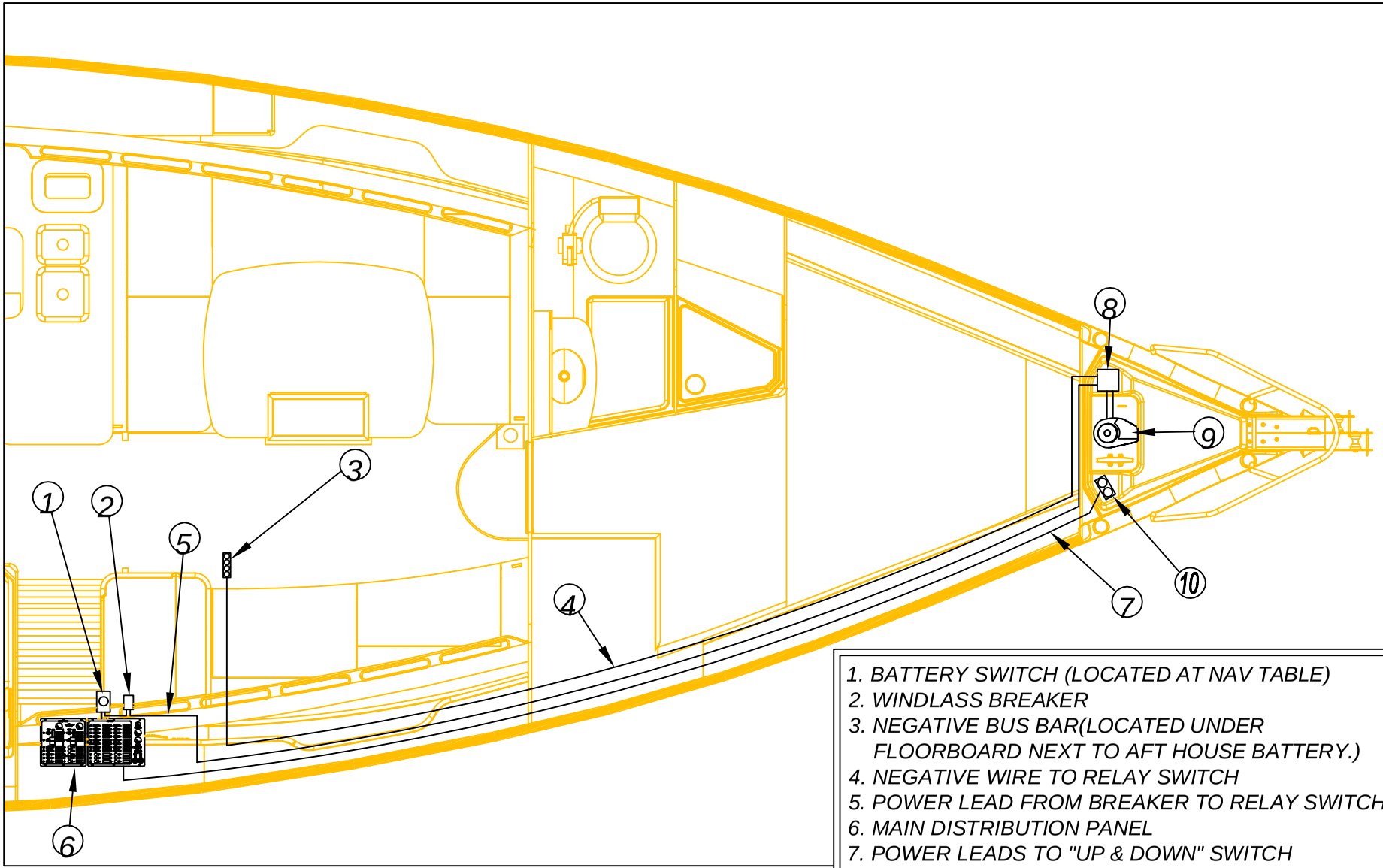

1. BATTERY SWITCH (LOCATED AT NAV TABLE)
2. WINDLASS BREAKER
3. NEGATIVE BUS BAR(LOCATED UNDER FLOORBOARD NEXT TO AFT HOUSE BATTERY.)
4. NEGATIVE WIRE TO RELAY SWITCH
5. POWER LEAD FROM BREAKER TO RELAY SWITCH
6. MAIN DISTRIBUTION PANEL
7. POWER LEADS TO "UP & DOWN" SWITCH
8. WINDLASS RELAY SWITCH
9. WINDLASS LOCATION
10. WINDLASS "UP & DOWN" CONTROLS

NOTE: SEE FOLLOWING PAGE FOR SCHEMATIC AND WIRE SPECS

DRAWING TITLE: OPTIONAL WINDLASS LAYOUT

DRAWING NO.	REVISION NO.
4268063H-2	None
DRAWN BY: ENG	DATE: 07/11/02

This document discloses information for which HUNTER MARINE CORP. has proprietary rights.

HUNTER

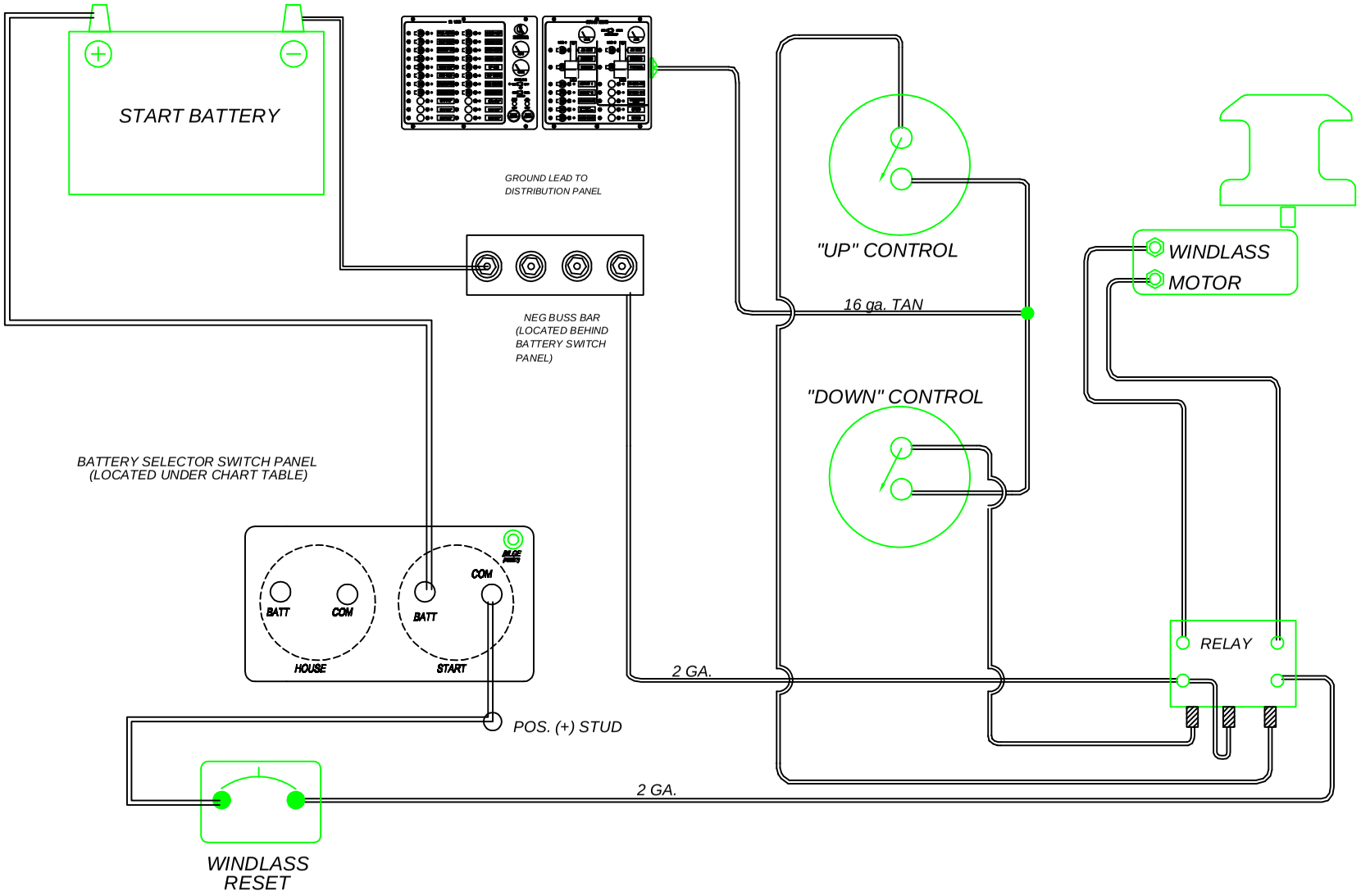

PAGE 64H-3

DRAWING TITLE: WINDLASS WIRING SCHEMATIC

DRAWING NO.: 4268064H-3

REVISION NO.: NONE

DRAWN BY: ENG

DATE:

This document discloses information for which HUNTER MARINE CORP. has proprietary rights.

HUNTER

OPTIONAL ELECTRIC HALYARD WINCH SYSTEM

BASIC OPERATING INSTRUCTIONS:

1. START ENGINE IF NOT ALREADY RUNNING

2. HALYARD SWITCH ON DECK SHOULD NOW OPERATE WINCH

NOTE:

SEE PG 63A-8 FOR RESET FUNCTION

DRAWING TITLE: OPTIONAL ELECTRIC HALYARD OPERATING INSTRUCTIONS	
DRAWING NO. 4268064I-1	REVISION NO. None
DRAWN BY: ENG	DATE: 07/11/02

This document discloses information for which HUNTER MARINE CORP. has proprietary rights.

HUNTER

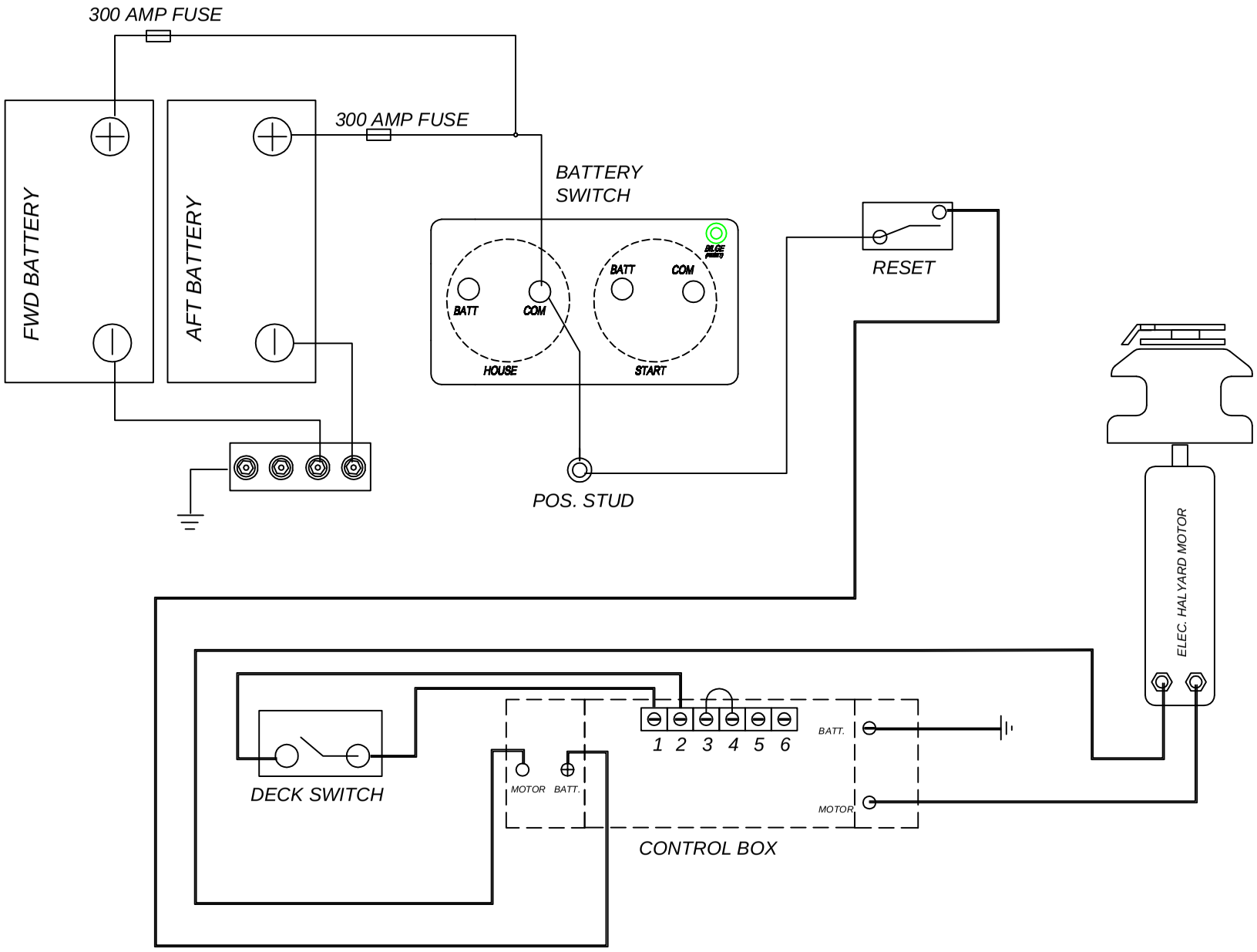

PAGE 64I-2

DRAWING TITLE: OPTIONAL ELECTRIC HALYARD SCHEMATIC	
DRAWING NO. 4268064I–2	REVISION NO. None
DRAWN BY: ENG	DATE: 08/15/02

This document discloses information for which HUNTER MARINE CORP. has proprietary rights.

HUNTER

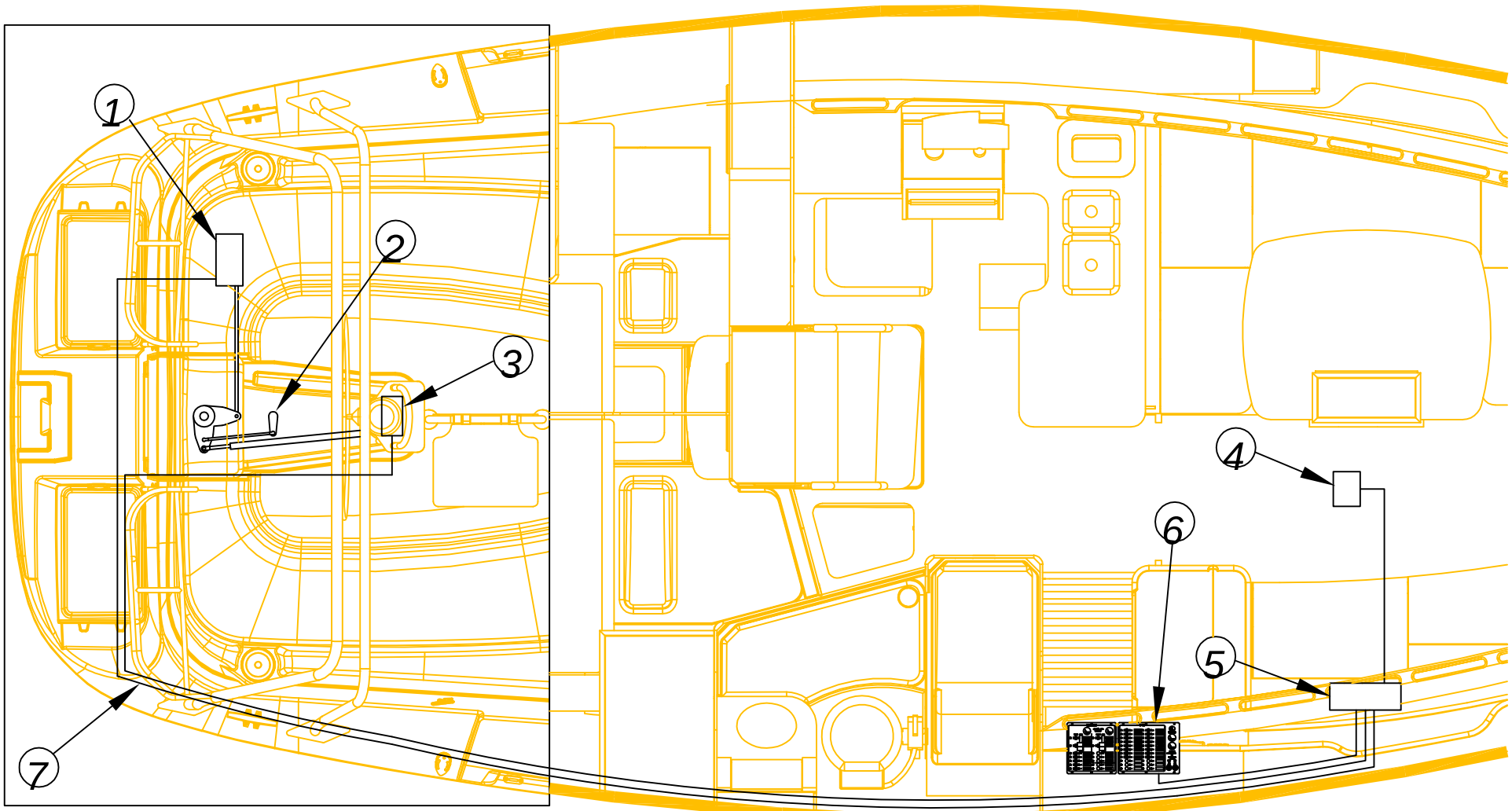

BOXED AREA DEPICTS ABOVE DECK AREA

1. *LINEAR DRIVE UNIT*
2. *RUDDER REFERENCE*
3. *AUTOPILOT DISPLAY (IN STEERING PEDESTAL)*
4. *FLUX GATE COMPASS (UNDER CENTER MAIN BILGE)*
5. *AUTOPILOT COURSE COMPUTER*
6. *MAIN POWER PANEL*
7. *MOTOR CONTROL LEAD*

SEE RAY MARINE MANUAL FOR FURTHER DETAILS

DRAWING TITLE: OPTIONAL AUTOPILOT LAYOUT	
DRAWING NO. 4268064J	REVISION NO. None
DRAWN BY: ENG	DATE: 07/11/02

This document discloses information for which HUNTER MARINE CORP. has proprietary rights.

HUNTER

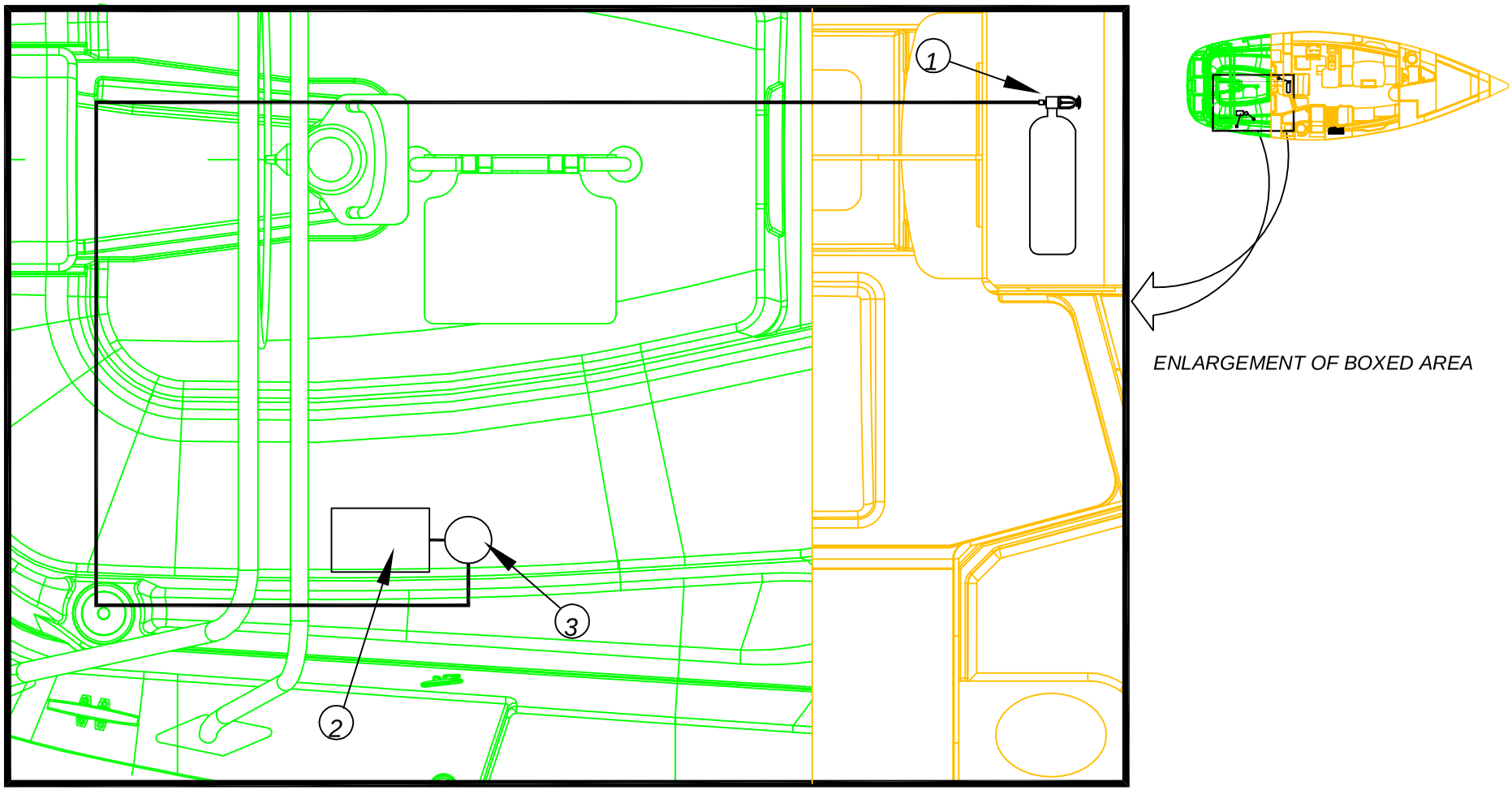

ENLARGEMENT OF BOXED AREA

1. AUTOMATIC FIRE EXTINGUISHER (LOCATED IN ENGINE BOX)
2. ENGINE PANAL (PORT COCKPIT COAMING)
3. DISPLAY (PORT COCKPIT COAMING)

DRAWING TITLE: AUTOMATIC FIRE EXTINGUISHER LAYOUT		This document discloses information for which HUNTER MARINE CORP. has proprietary rights.
DRAWING NO. 4268064K-1	REVISION NO. None	HUNTER
DRAWN BY: ENG	DATE: 8/15/02	

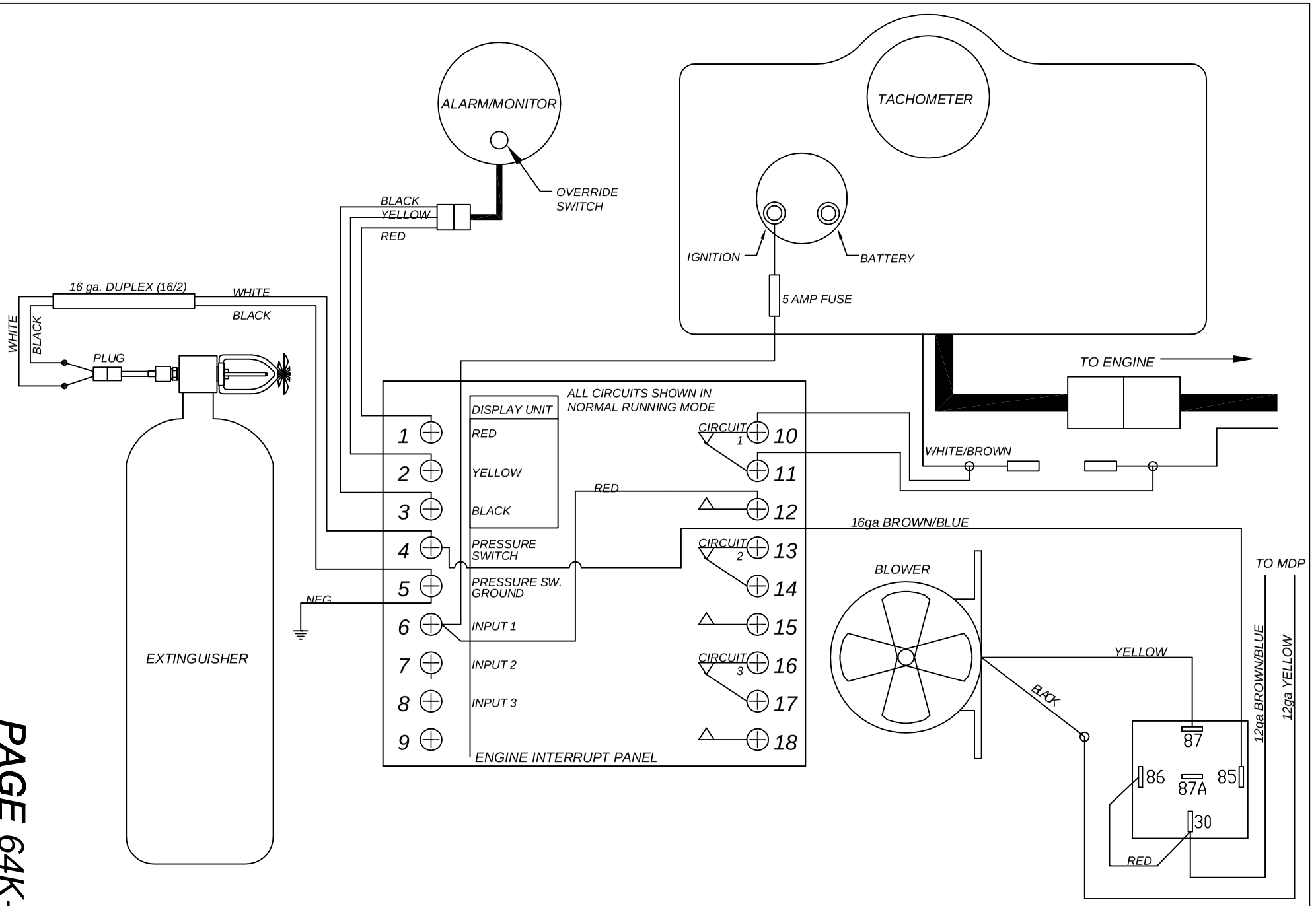

PAGE 64K-2

DRAWING TITLE: AUTOMATIC FIRE EXTINGUISHER SCHEMATIC	
DRAWING NO.: 4268064K-2	REVISION NO.: None
DRAWN BY: ENG	DATE: 08/15/02

This document discloses information for which HUNTER MARINE CORP. has proprietary rights.

HUNTER

426 MASTER ELECTRICAL AMPERAGE DATA

12V.D.C. SYSTEM	
CIRCUIT/BREAKER	**AMPERAGE**
D.C. MAIN	75amp
PANEL LIGHTS	5amp
CABIN LIGHTS	35amp
COURTESY LIGHTS	10amp
TANK INDICATOR	5amp
WATER PRESSURE	10amp
SHOWER SUMP	20amp
MACERATOR	20amp
FREEZER	15amp
ENTERTAINMENT	25amp
REFRIGERATION	15amp
L.P. GAS	5amp
WINDLASS (SWITCH)	5amp
INSTRUMENTS	5amp
G.P.S.	5amp
V.H.F.	10amp
AUTO-PILOT	25 amp
ANCHOR LIGHT	5amp
STEAMING LIGHT	5amp
DECK LIGHT	15amp
RUNNING LIGHTS	10amp
COMPASS (TIES TO RUN. LIGHTS)	
HOUSE BATTERY CABLES	300amp
ENGINE STARTER CABLE	NONE
WINDLASS (MOTOR) CABLE	70 amp

110V.A.C. SYSTEM	
SHORE POWER A.C. MAIN/S	30 amp
OUTLETS	15amp
MICROWAVE OVEN	15amp
WATER HEATER	20amp
BATTERY CHARGER	15amp
INVERTER	INTERNAL
AIR CONDITIONING	25amp

220V.A.C. SYSTEM (ON SELECT OVERSEAS MODELS ONLY)	
SHORE POWER A.C. MAIN/S	15 amp
OUTLETS	10amp
MICROWAVE OVEN	10amp
WATER HEATER	10amp
BATTERY CHARGER	10amp
INVERTER	N/A
AIR CONDITIONING	15amp

MASTER ELECTRICAL WIRING/CABLE DATA

DESCRIPTION	WIRE SIZE	WIRE COLOR
LPG SWITCH/POWER	16 gauge	ORANGE/RED
TANK DISPLAY	16 gauge	RED/ORANGE
FUEL SENDER	16 gauge	PINK,ORANGE/WHITE
NEGATIVE	16 gauge	YELLOW
FWD WATER SENDER	16 gauge	ORANGE/BLUE, PINK/BLACK
NEGATIVE	16 gauge	YELLOW
WATER PUMP	12 gauge	BROWN
NEGATIVE	12 gauge	YELLOW
VACCU FLUSH	10 gauge	BROWN/PINK
NEGATIVE	16 gauge	YELLOW
AFT WASTE SENDER	16 gauge	ORANGE/GREEN, PINK/GRAY
NEGATIVE	16 gauge	YELLOW
AFT SUMP PUMP	12 gauge	BROWN/BLACK
NEGATIVE	12 gauge	YELLOW
FWD MACERATOR	10 gauge	BROWN/WHITE
NEGATIVE	16 gauge	YELLOW
VHF	16 gauge	RED/WHITE
NEGATIVE	16 gauge	YELLOW
COURTESY LIGHTS	16 gauge	BLUE/WHITE
NEGATIVE	16 gauge	YELLOW
CABIN LIGHTS	10-14 gauge	BLUE
NEGATIVE	16 gauge	YELLOW
PORT FWD SPEAKERS	16 gauge	WHITE/RED
STBD FWD SPEAKERS	16 gauge	WHITE/BROWN
PORT AFT SPEAKER	16 gauge	WHITE/GREEN
STBD AFT SPEAKER	16 gauge	WHITE/VIOLET
PORT ARCH SPEAKER	16 gauge	WHITE/PINK
PORT NEGATIVE	16 gauge	WHITE/YELLOW
STBD ARCH SPEAKER	16 gauge	WHITE/GRAY
STBD NEGATIVE	16 gauge	WHITE/BLACK
COMPASS BOW LIGHT	16 gauge	GRAY/WHITE
STERN LIGHT	16 gauge	GRAY/YELLOW
NEGATIVE	16 gauge	YELLOW
MAST LIGHT	16 gauge	GRAY
STEAMING LIGHT	16 gauge	GRAY/GREEN
ANCHOR LIGHT	16 gauge	GRAY/RED
HOUSE BATTERY	2/O	RED
NEGATIVE	2/O	YELLOW
AC/DC PANEL	6 gauge	ORANGE/RED
NEGATIVE	6 gauge	YELLOW
ENGINE	2 gauge	RED
HALYARD	2 gauge	YELLOW
T.V.	10 gauge	RED
NEGATIVE	10 gauge	YELLOW
REFRIGERATION	10 gauge	RED/BLACK
FREEZER	10 gauge	RED/WHITE
NEGATIVE	10 gauge	YELLOW
STEREO/DVD	12 gauge	ORANGE/GREEN
STEREO POWER	12 gauge	RED
NEGATIVE	12 gauge	YELLOW
INVERTER GROUND	4 gauge	GREEN/YELLOW
WINDLASS SWITCH	16 gauge	TAN
MANUAL BILGE	12 gauge	BROWN/RED
AUTO BILGE	12 gauge	BROWN/ORANGE
NEGATIVE	12 gauge	YELLOW
AFT SUMP PUMP	12 gauge	BROWN/BLACK
FWD SUMP PUMP	12 gauge	BROWN/YELLOW
AUTO PILOT	8 gauge	RED
NEGATIVE	8 gauge	YELLOW
CHAINPLATE GROUND	4 gauge	GREEN/YELLOW
BATTERY CHARGER # 1	8 gauge	ORANGE/RED
BATTERY CHARGER # 2	8 gauge	ORANGE/GREEN

STEERING CONSOLE HOLDS INSTRUMENTS SUCH AS KNOTMETER, DEPTH GAUGE, WIND INDICATOR, ETC. CONFIGURATIONS MAY VARY WITH DIFFERENT OPTIONS.

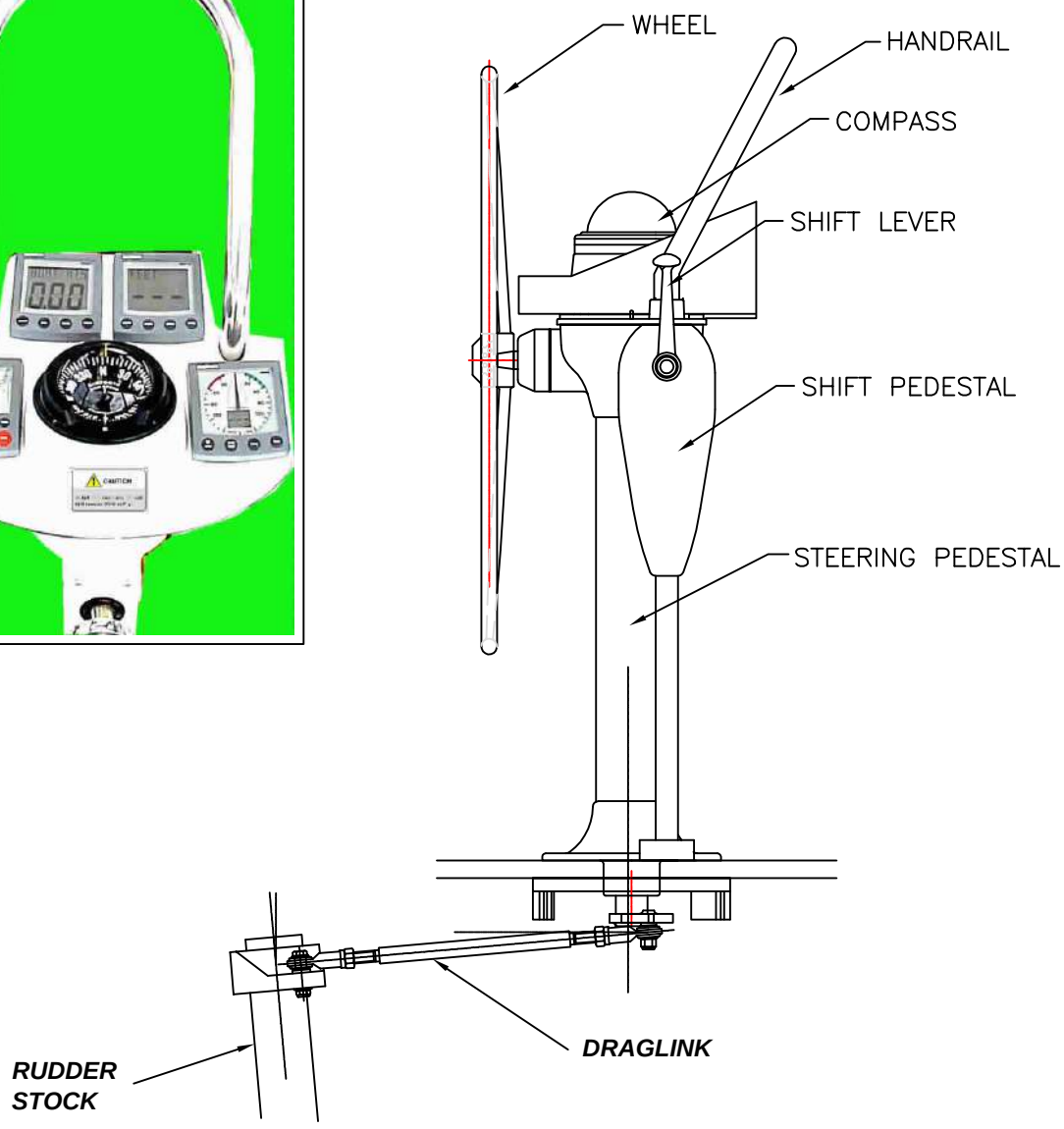

SEE WHITLOCK PROVIDED MATERIAL FOR DETAILED INFORMATION ON COMPONENTS, MAINTENANCE, ETC

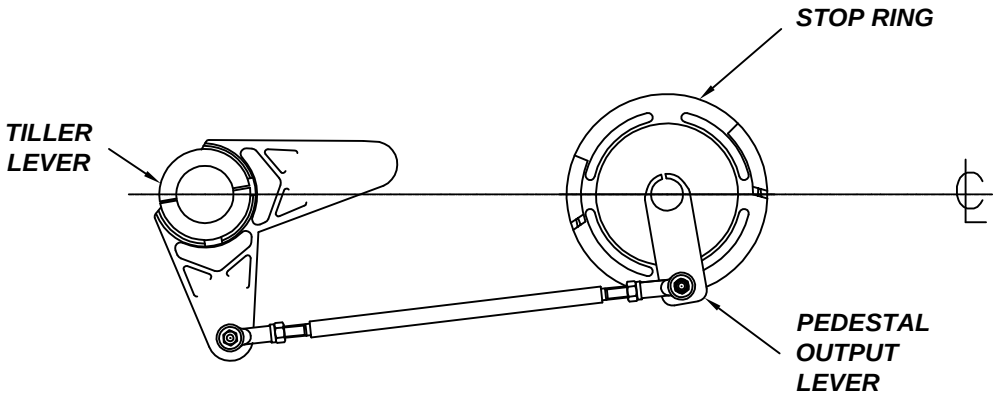

This document discloses information for which HUNTER MARINE OWNS the proprietary rights.

HUNTER

DRAWING TITLE: STEERING PEDESTAL

DRAWING NO.	REVISION NO.	DATE
4268066	None	07/11/02

DRAWN BY: ENG

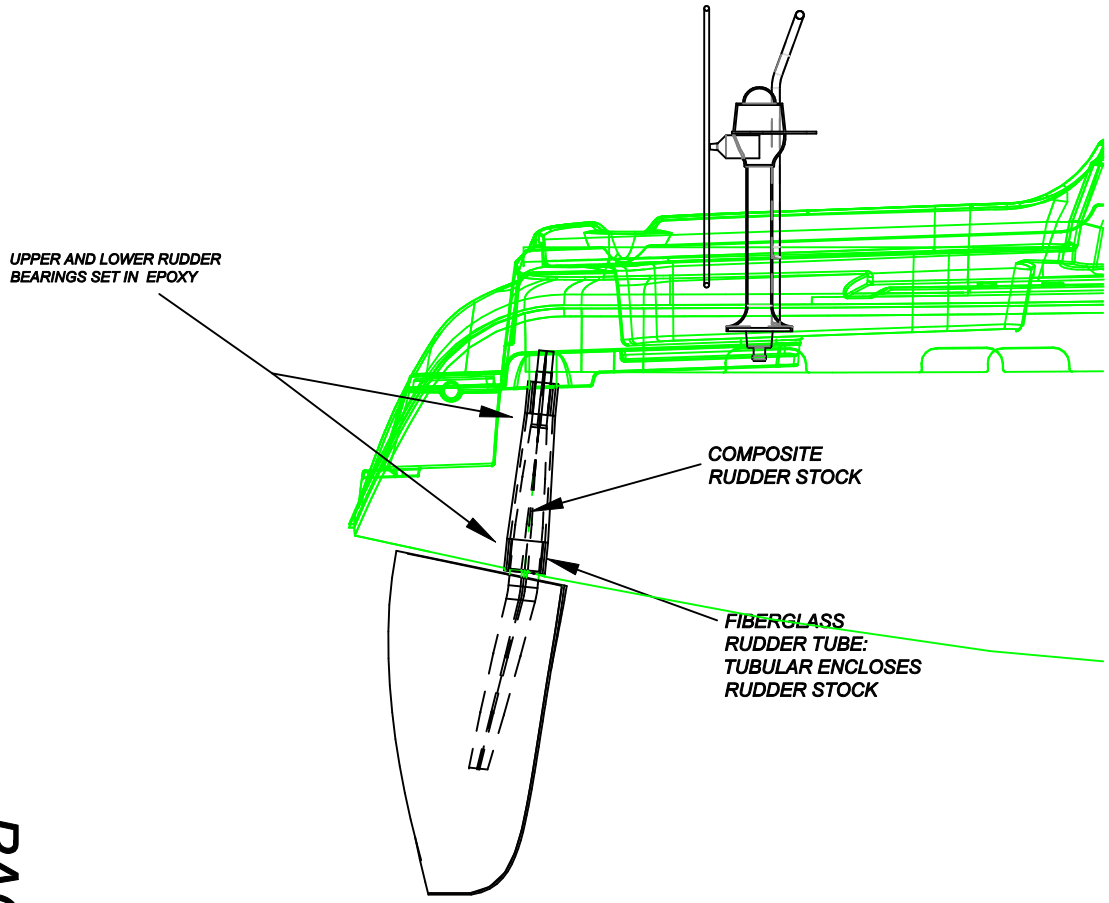

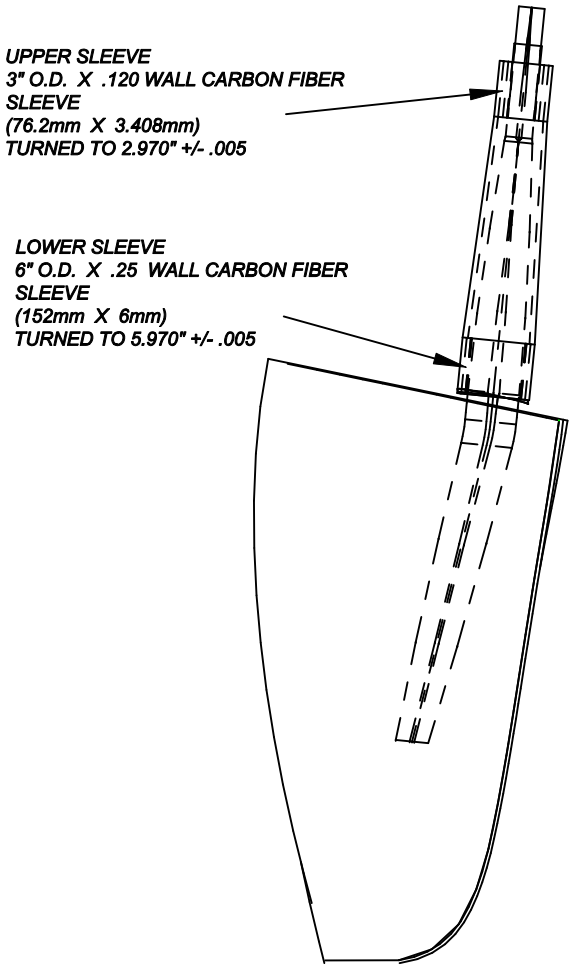

PAGE 67

DRAWING TITLE: RUDDER AND STOCK DETAILS	
DRAWING NO. 4268067	REVISION NO. None
DRAWN BY: ENG	DATE: 07/11/02

This document discloses information for which HUNTER MARINE CORP. has proprietory rights.

HUNTER

this document discloses information for which HUNTER MARINE CORP. has proprietary rights.

HUNTER

DRAWING TITLE: EMERGENCY TILLER ARM

DRAWING NO.	REVISION NO.	DATE:
4268068	None	07/11/02

DRAWN BY: ENG

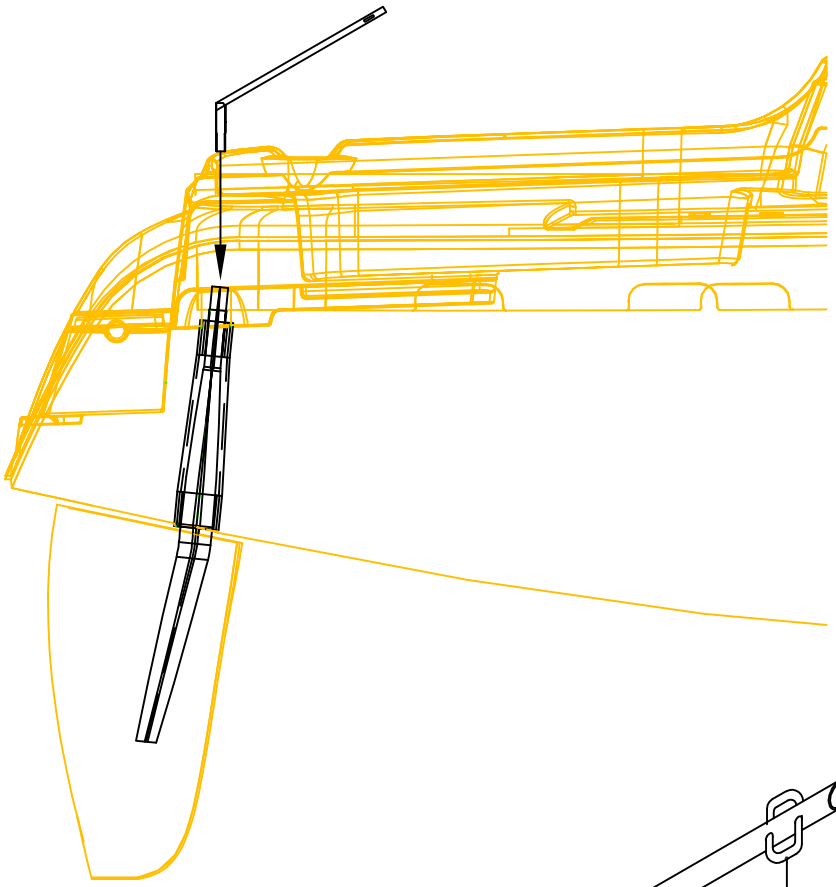

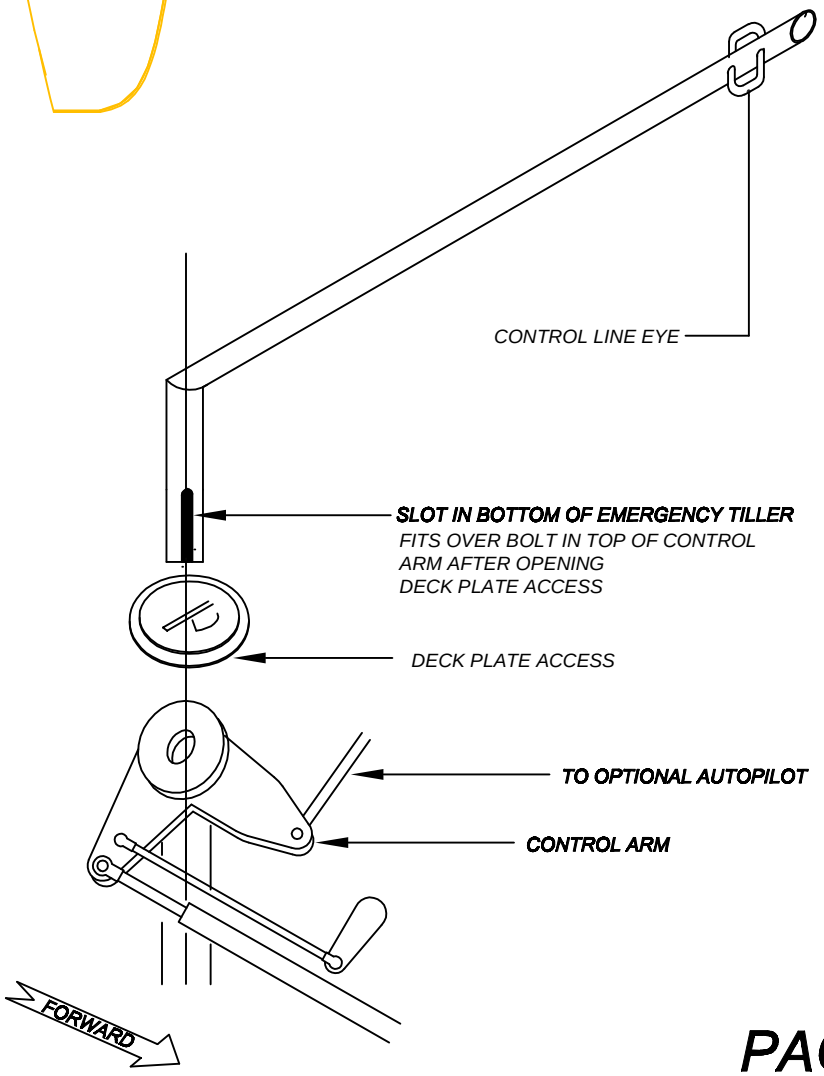

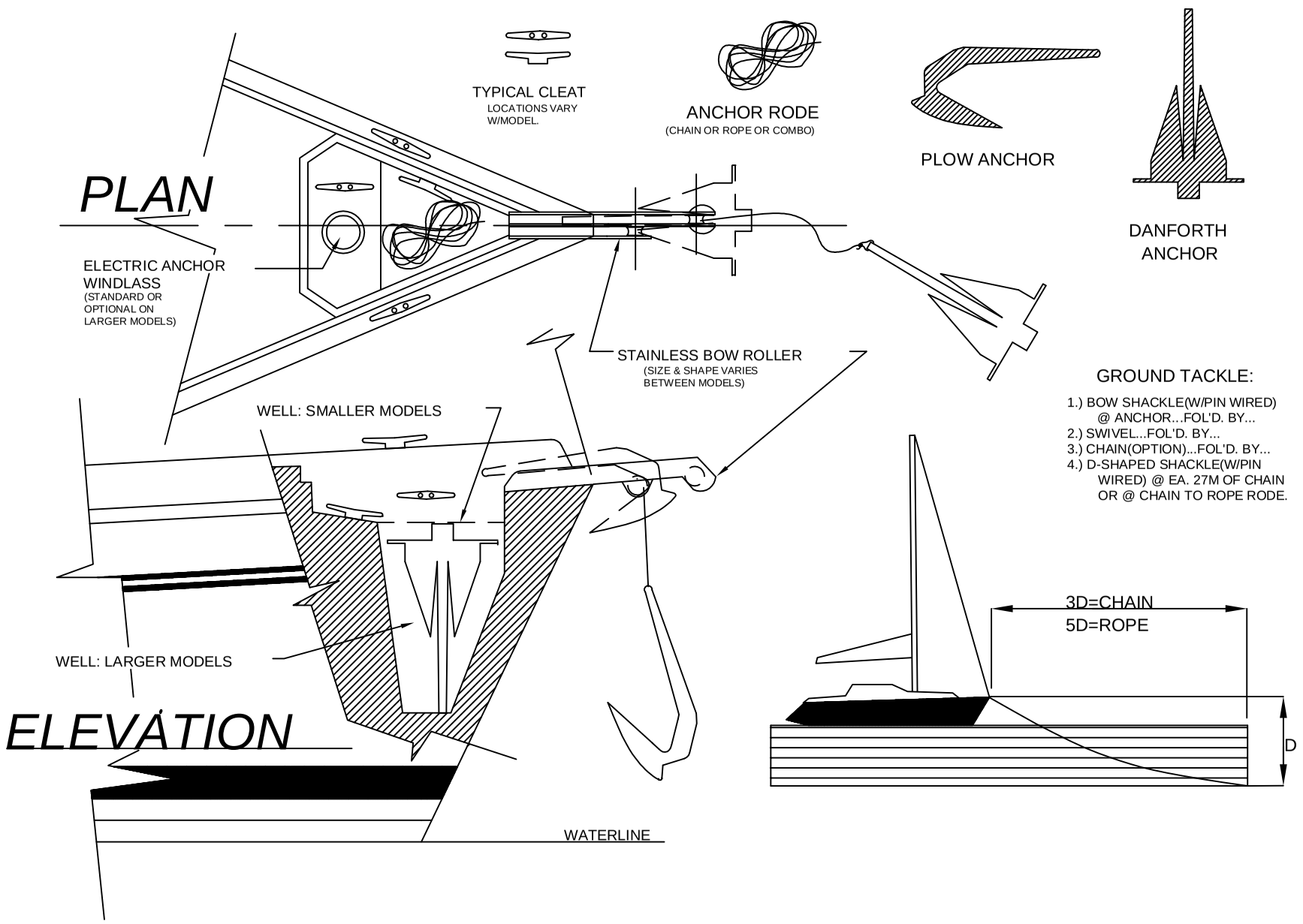

DRAWING TITLE: BASIC ANCHORING DIAGRAM

DRAWING NO. 4268069 | REVISION NO. NONE

DRAWN BY: ENG | DATE:

This document discloses information for which HUNTER MARINE CORP. has proprietary rights.

HUNTER

INDEX

AIR CONDITIONING SYSTEM ..... 63B-1 THRU 63 B-4
ANCHORING..... 69
ARCH INSTALLATION..... 44
AUTOPILOT (LAYOUT)..... 64J
BILGE PUMP (SCHEMATIC FOR ELECTRIC PUMP)..... 59B
BILGE PUMPS (LAYOUT)..... 59A
BOOM..... 45A
DECK HARDWARE..... 38,39,42A-1,42A-2,54
DIMENSIONS, CAPACITIES, ETC..... 37
DINETTE TABLE OPERATION..... 41A
ELECTRICAL PANELS (NAV STATION DESCRIPTIONS)..... 63A-7
ELECTRICAL PANELS (SCHEMATICS)..... 63A-12,64-A
ELECTRICAL SYSTEM..... 63A-1 THRU 65A-2
ELECTRICAL SYSTEM TABLE OF CONTENTS..... 63A-1
ELECTRICAL SYSTEM (AMPERAGE TABLE)..... 65A-1
ELECTRICAL SYSTEM (OPERATING INSTRUCTIONS)..... 55A
ELECTRICAL SYSTEM (WIRING COLORS,GAUGES)..... 65A-2
EMERGENCY TILLER..... 68
ENGINE (COMPARTMENT LAYOUT)..... 55B
ENGINE (EXHAUST SYSTEM)..... 55C
ENGINE (OPERATING INSTRUCTIONS)..... 55A
ENGINE (PROPELLER AND SHAFT)..... 56
FUEL SYSTEM..... 61
HALYARD (OPTIONAL ELECTRIC)..... 64-I
INTERIOR LAYOUT..... 40A,40B,40C
JIB FURLING LINES LAYOUT..... 42D
LAZYJACK..... 45C,45D
LIFTING POINTS..... 41B
MAINSHEET CONFIGURATIONS..... 43A,43C
PROPANE SYSTEM..... 62A,62B
REEFING..... 45A,45B
REFRIGERATION SYSTEM..... 64G-1,64G-2
RUDDER DETAILS..... 67
RUNNING RIGGING (LAYOUTS)..... 42A-43C
RUNNING RIGGING (LENGTHS)..... 46A,46B
SAILPLAN..... 36
SEACOCKS/THRUHULL FITTINGS..... 60C
STANDING RIGGING (ATTACHMENTS)..... 51
STANDING RIGGING (DESCRIPTION)..... 47
STANDING RIGGING (LAYOUT)..... 48A-1,48A-2
STANDING RIGGING (SPREADERS)..... 49A,49B
STANDING RIGGING (STRUT ASSEMBLY)..... 48B
STANDING RIGGING (TUNING)..... 52,53
STEERING PEDESTAL..... 66
SUMP PUMP (LAYOUT)..... 59C
THRUDECK LOCATIONS..... 60B
THRUHULL LOCATIONS..... 60A
VANG SYSTEMS..... 42B,42C
WASTE SYSTEM (LAYOUT)..... 58A-1
WASTE SYSTEM (MACERATOR SCHEMATIC)..... 58B
WASTE SYSTEM (OVERBOARD DISCHARGE SYSTEM)..... 58A-3
WASTE SYSTEM (VACCUFLUSH)..... 58A-2
WATER (MANIFOLD)..... 57C
WATER (POTABLE SYSTEM LAYOUT)..... 57B
WATER (SYSTEM OPERATION)..... 57A
WINDLASS..... 64H