Welcome to

THE HUNTER MARINE FAMILY

Congratulations on your new sailing yacht manufactured by Hunter Marine. We have engineered and constructed your boat to be as fine a yacht as any afloat. In order to get the best performance and most enjoyment from your boat you should be familiar with its various elements and their functions. For your sailing pleasure and safety, please take time to study this manual.

We stand behind the quality of your boat with a warranty, which you should review. To in-sure the validity of your warranty, please complete the attached card and send it to us within ten (10) days of the purchase date. Section 15 of the U.S. Federal Boat Safety Act requires registration of a boat's first owner. The warranty data should also be recorded in the space below for your own reference.

This manual has been compiled to help you operate your craft with safety and pleasure. It contains details of the craft; equipment supplied or fitted, systems, and information on operation and maintenance. Please read it carefully, and familiarize yourself with the craft before using it. If this is your first sailboat or you are changing to a type of craft you are not familiar with, please ensure that you obtain proper handling and operating experience before you assume command of the craft. Your dealer or national sailing federation or yacht club will be pleased to advise you of local sea schools or competent instructors.

PLEASE KEEP THIS MANUAL IN A SAFE PLACE AND HAND IT OVER TO THE NEW OWNER IF YOU SELL THE CRAFT.

You should also complete the warranty cards for your engine, stove, head, electric water pump and other accessories. These are enclosed in the manufacturers' manuals that are packaged with your owner's manual.

OWNER INFORMATION CARD

HULL IDENTIFICATION NUMBER IS ON THE STARBOARD AFT SIDE OF THE HULL OR TRANSOM. THIS NUMBER MUST BE GIVEN IN ALL NECESSARY CORRESPONDENCE.

HULL NO. *DATE DELIVERED TO OWNER*

YACHT NAME

OWNER NAME

STREET ADDRESS

CITY *STA TE/COUNTRY* *ZIP CODE*

HOME PORT

ENGINE MODEL *SERIAL NO.* *PROPELLER SIZE*

DEALER *PHONE*

STREET ADDRESS

CITY *STA TE/COUNTRY* *ZIP CODE*

HUNTER MARINE LIMITED WARRANTY

LIMITED ONE-YEAR WARRANTY

Hunter Marine warrants to the first-use purchaser and any subsequent owner during the warranty period, that any part manufactured by Hunter will be free of defects caused by faulty workmanship or materials for a period of twelve (12) months from the date of delivery to the first-use purchaser under normal use and service. During this period, Hunter will repair or replace any part judged to be defective by Hunter.

LIMITED FIVE-Y E AR HULL STRUCTURE

Hunter warrants to the first-use purchaser and any subsequent owner during the warranty period that the hull of each boat will be free from structural defects in materials and workmanship for a period of five (5) years from the date of delivery to the first-use purchaser under normal use and service.

This limited warranty applies only to the structural integrity of the hull and supporting pan/grid or stringer system. The obligation of Hunter under this limited warranty is restricted to the repair or replacement of hulls that are determined to be structurally defective.

RESTRICTIONS APPLICABLE TO WARRANTIES

These limited warranties *do not cover* the following:

(1) Problems caused by improper maintenance, storage, cradling, blocking, normal wear and tear, misuse, neglect, accident, corrosion, electrolysis or improper operation.

THIS WARRANTY IS EXPRESSLY IN LIEU OF ANY AND ALL OTHER REMEDIES AND WARRANTIES EXPRESSED AND IMPLIED, INCLUDING THE WARRANTIES OF MERCHANTABILITY AND FITNESS. SOME STATES OR COUNTRIES DO NOT ALLOW LIMITATIONS ON HOW LONG AN IMPLIED WARRANTY LASTS, SO THE ABOVE LIMITATION MAY NOT APPLY TO YOU. THE PURCHASER ACKNOWLEDGES THAT NO OTHER REPRESENTATIONS WERE MADE TO HIM OR HER WITH RESPECT TO THE QUALITY AND FUNCTION OF THE BOAT. ANY CONSEQUENTIAL DAMAGES THAT MAY BE INCURRED ARE EXCLUDED AND JUDGES DEFECTIVE BY HUNTER. SOMESTATES OR COUNTRIES DO NOT ALLOW THE EXCLUSION OF INCIDENTAL OR CONSEQUENTIAL DAMAGES, SO THE ABOVE LIMITATION OR EXCLUSION MAY NOT APPLY TO YOU. THIS WARRANTY GIVES YOU SPECIFIC LEGAL RIGHTS, AND YOU MAY ALSO HAVE OTHER RIGHTS THAT VARY FROM STATE TO STATE OR COUNTRY TO COUNTRY.

HUNTER MARINE LIMITED WARRANTY

WARRANTY REGISTRATION

These limited warranties shall not be effective unless the Hunter Warranty Registration Form and Pre-Delivery Service Record, which are furnished with each new boat, are filled out completely and returned to Hunter within fifteen (15) days of delivery. Responsibility for sending the completed Registration Form remains with the dealer.

It is critical that the Warranty Registration Form is signed by both the dealer and the owner and returned to Hunter. Warranty coverage cannot be initiated until Hunter receives the completed form. All repairs and/or replacements will be made by an authorized Hunter dealer, or at the option of Hunter, at the Hunter plant. If the repairs are of such a nature that the warranty work must be performed at the Hunter plant, the owner shall pay transportation costs to and from the Hunter plant. The labor cost reimbursement will be based on a labor allowance schedule established by Hunter and where not applicable, on a reason-able number of hours as determined by Hunter. An authorized Hunter service representative must approve any repairs and replacements in advance.

TRANSFER OF LIMITED WARRANTIES

Limited warranties will be transferred to a subsequent purchaser of the boat if:

(1) A notice of the transfer of ownership of the boat is given by the subsequent purchaser in writing to Hunter within thirty (30) days of the transfer.

(2) The notice shall include the name, address and telephone number of the subsequent purchaser, the date of purchase, the hull number, and the name of the seller of the boat.

Hunter will mail notice of expiration dates of the limited warranties to the subsequent owner. The transfer of the ownership of the will not extend the expiration dates of the limited warranties.

CUSTOMER SATISFACTION SURVEY

During the first year of ownership, the first purchaser will receive two Customer Satisfaction Surveys: the first (CSS #1) will be received shortly after taking delivery and focuses on the customer's experience with the dealer and commissioning of the boat, and the owner's initial satisfaction.

The second survey (CSS #2) is given nine to ten months into ownership, and primarily gives the customer an opportunity to evaluate dealer service capability and the boat's functional systems and characteristics. Both surveys are contingent upon receipt of the first purchaser's Warranty Registration form.

HUNTER MARINE'S OWNER AND FOUNDER

WARREN R. LUHRS

BRIEF BACKGROUND

Warren Luhrs was born in East Orange, New Jersey in 1944 into a family with an established tradition in the maritime and transportation industries. His great-grandfather, Henry, was a railroad and clipper-shipping pioneer in America, while his great-uncle John helped build the famous St. Petersburg to Moscow railroad for Czar Alexander II.

Henry Luhrs owned shares in twenty-two different ocean-going vessels – barks, brigs, and schooners - and was the principal owner of the bark *Sophia R. Luhrs,* named for his wife. He was also a partner with Albert Sprout, who managed the shipyard where the *Sophia R. Luhrs* was built in Melbridge, Maine.

Warren Luhrs' father Henry worked at a small boat manufacturer in Morgan, New Jersey, and later started his own company, continuing the Luhrs' family sea tradition during the great depression. During World War II he repaired boats and installed ice sheathing on their bows for the Coast Guard.

After the War, Henry built 27-foot fishing boats and in 1948 began to construct custom-built pleasure craft. He then turned to skiffs and in 1952 incorporated as Henry Luhrs Sea Skiffs, where he constructed lapstrake sea skiffs using assembly-line techniques. Henry personally "shook down" his prototypes on family trips up the Hudson River to Lake Champlain.

The sea skiff is a class of boat that has been very popular, owing to its seaworthiness. It features a sharp bow, which reduces pounding in surf or choppy seas, and a hull whose forward section is rounded below the waterline to increase stability in rough water or a following sea. Such skiffs can either be smooth sided or of a lapstrake construction.

Inspired by Henry Ford, Henry Luhrs' aimed to give the average man the opportunity to enjoy the luxury of boating by building an affordable and reliable boat. He was both designer and engineer, and his progressive new models exhibited his talent for innovation. He successfully changed the line of the bow from straight to curved at a time when the industry trend was a straight square effect, and he is believed to be the first designer-builder to popularize a small boat with a fly bridge.

In 1960, Luhrs acquired the Ulrichsen Boat Company of Marlboro, New Jersey. It was here that Luhrs' Alura fiberglass division was located. In 1965, Henry sold his company to Bangor Arrostook Railroad, which was to become the recreational conglomerate Bangor-Punta. It was also during this period that Silverton of Tom's River, New Jersey was purchased by John and Warren Luhrs.

Today, Warren R. Luhrs and his brother John own the Luhrs Group of marine manufacturers, which consists of Silverton Marine, Mainship Motor Yachts, and Luhrs Fishing Boats with its Alura division, as well as Hunter Marine, which exclusively manufactures sailboats.

In January of 1996, the Luhrs family transferred a portion of the Luhrs Group to its employees through an ESOP program.

LAUNCHING & RETRIEVING PROCEDURES

LAUNCHING

1. Remove any and all tie down straps and ropes securing the boat to the trailer, as well as any lines securing the rudder in the upright position or on centerline. The only attachment of the boat to the trailer should be the strap from the bow eye to the trailer winch.

2. The spar can be raised before or after launch, depending on the time available before and the docking facilities available after launch. **Beware of nearby power lines before raising spar.**

3. Attach the necessary bow and stern mooring lines and fenders if necessary. Do not lower the fenders over the side until the boat is clear of the trailer.

4. Initially slacken the trailer winch and familiarize yourself with its gear switch action and return the winch to the locked position.

6. Load all loose gear and provisions aboard by lowering the swim ladder in the transom.

7. Back the boat and trailer down the ramp until the back wheels of the vehicle are just clear of the water, Retrieve the bow and stern lines as necessary. Loosen the trailer winch and bow strap.

8. Once the boat is floating free, push the boat clear of the trailer guides to the available dock, maintaining control with the mooring lines.

9. Slowly pull the empty trailer out of the water, being careful that boat and people stay clear.

10. Park the trailer and vehicle and return to the boat.

RETRIEVING

1. Raise centerboard and rudder.

2. Back trailer into water, remembering boat will be floating lower with ballast tank full than when it was launched.

3. Maneuver boat between trailer guides and up to the winch.

4. Connect bow strap and with winch in correct gear, winch boat up and snug against bow stop.

5. Center boat between upright aft trailer guides.

6. Slowly pull boat from water until the weight of the boat is on the trailer.

7. Confirm alignment on trailer. Put trailer back in water if necessary to realign boat.

8. Make sure that rudder is pinned or tied in upright position so that the tip doesn't drag on ground.

9.De-rig and unstep mast if not already done. **Beware of nearby power lines when lowering mast.**

10. Tie boat to trailer, and secure mast.

ACP

ADVANCED COMPOSITE PROCESS

by JY Sailboats: the future of sailing
5 Colton Rd. • East Lyme, CT 06333 • (860) 739 3033

ACP: the most innovative boatbuilding process today

ACP is a plastic based process which uses an outer plastic skin, a central foam core and an inner fiberglass skin. The outer plastic skin is 1/8" thick and is a co-extrusion of high impact resistant ABS and UV resistant Plexiglas. The plastic components are formed by using a process known as thermoforming which uses a vacuum to draw heated plastic onto a mold.

Because ACP is so much stronger than fiberglass, JYs can take a great deal more abuse before damage occurs. Should you puncture or crack the hull, the foam core will keep the damage from spreading and provides a backing surface to work with.

Repairs can be made quickly, cleanly and easily using our two part patch kit which costs only $15. Should you have any questions, a JY service consultant can walk you through almost any repair over the phone.

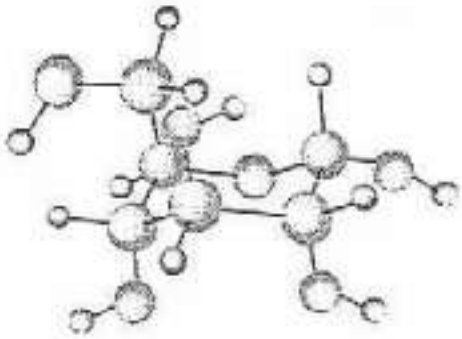

Send in the reinforcements

This plastic skin is then reinforced with a foam core by placing the plastic hull in a matched mold with a 1" gap between the plastic and the mold. Liquid foam is then injected into the void under high pressure. The foam expands, conforming to the shape of the hull, and becomes the middle layer of the composite.

The third strata consists of fiberglass cloth. The cloth is attached to the mold during the foaming process and is integrated into the hull as the foam expands.

Benefits

Strength	ACP is five times stronger than fiberglass and because there are no fibers to breakdown, the hull won't become "soft."
Uniformity Rigidity	The ACP process provides more product uniformity and rigidity, vital to a one design class.
Cost	The ACP process is less labor intensive resulting in a lower priced boat.
Environmentally Friendly	The ACP process is much more environmentally friendly than fiberglass production. The Amended Clean Air Act, which takes effect in 1996, will greatly restrict all fiberglass manufacturing by putting a severe limit on styrene emissions.

GENERAL CARE

NOTICE

Your new Hunter is built using the ACP process. This is not a Fiberglass® boat!

The outer skin is a weatherable ABS plastic known as Loran® S and is built by BASF. The outer plastic skin is approximately .170” thick.

CLEANING LURAN® S SURFACES

Luran® S (acrylonitrile/styrene/acrylate) should be cleaned regularly. Normal accumulations of dirt can be removed simply by occasional rinsings with water. If your boat is operated in salt water, more frequent rinsing will be required. To remove dirt, grease or oil, use soap and water or isopropyl alcohol. For stubborn stains, you can use mineral spirits but never leave a rag with mineral spirits on it lying on your boat.

You can wax the surface if you would like, but be aware this will make the boat slippery. For light scratches you can use a wax with a light rubbing compound or a mirror glaze which is available at any hardware store.

For more extensive repairs, contact the factory.

When storing, please open the drain plugs so the boat can breathe. When trailering make sure the boat is well supported so as not to dent the hull.

! CAUTION

Never leave a rag with mineral spirits sitting on the boat as this will attack the plastic and void the warranty. Never use acetone or other solvents. They will damage the finish on your boat.

CLEANING ACRYLIC

Use only mild soap and water to clean acrylics. Do not use products containing solvents such as ammonia, which is found in many window cleaners.

! CAUTION

Use care when cleaning acrylic. Dry cloth and many glass cleaners will scratch. Solvents will attack the surface.

! WARNING

Cleaning agents and paint ingredients may be flammable and/or explosive, or dangerous to inhale. Be sure to use adequate ventilation, and appropriate safety clothing (gloves, safety glasses, respirator, etc.).

GENERAL CARE

SHALLOW SURFACE SCRATCHES

Remove the scratches by lightly hand wet sanding the surface with 600 grit sandpaper. Sand in one direction only and only until the scratches are removed (to retain as much thickness as possible). This will create a dull surface. To improve the surface gloss, sand the area with 1000 grit, then 1500 grit sandpaper. The surface should be starting to recover some of the gloss. To further increase the gloss level, polish the area with ultra fine polish (automotive polishes suitable for clear-coat).

MINOR DAMAGE

Minor damage is defined as a problem that does not affect the overall structure of the part or area. They are usually appearance concerns, such as scratches, surface mars, and minor dents. It is very important to ascertain the full extent of the damaged area. If any jagged edges or cracks are present, see the major damage section.

Mask off the damaged area, lightly hand sand (220 grit) the damaged area to remove any surface ridges and to promote adhesion. Sand in one direction only. In a well-ventilated area, apply a thin layer of Plexus adhesive in a 1:1 ratio to the damaged area. After the Plexus has dried, smooth the area with a fine (220 grit) sandpaper. Now, apply a thin layer of automotive body filler (Bondo) to fill in any imperfections, and allow to dry. Lightly sand with a 220 grit sandpaper, followed by a 400 grit sandpaper, then a 600 grit sandpaper. Finally, apply an automotive paint to match the color.

MAJOR DAMAGE

This type of damage can be holes, cracks, or large dents. Cracks, even those found around holes, must be prevented from growing. To do this, the ends must be found and blunted (by drilling small holes). Once this is done, the crack can be ground or routed into a V groove. This allows it to be filled easily and promotes a good bond. We suggest using a Dremel tool, being sure to work in a well-ventilated area.

Mask off the damaged area and lay down a bead of Plexus adhesive in a 1:1 ratio into the damaged area, slightly under filling the V groove. The Plexus will expand as it hardens. Skim the excess Plexus (if any) from the repair area keeping it level with the surrounding area. Allow to dry for 1 hour. Sand the damaged area until the surface is flush with the surrounding area. Apply a thin layer of automotive body filler to fill any voids. Allow the filler to dry, then wet sand with 220, 400, then 600 grit sandpaper.

After sanding the repaired area flush to the surrounding area, paint can then be applied. Recommended paints are spray enamels and oil based enamel brush-ons (Rustoleum).

Safety C onsiderations:

Use of solvents requires adequate ventilation, keeping in mind that they are usually highly flammable. Use proper procedures to avoid injury. In some instances, the use of these materials is controlled. Check all regulations prior to using.

Keep in mind that a repair can only attempt to match the performance predicted in the original part. The repair may not be quite as strong or stiff as the original part. The overall part/system behavior has probably changed.

Always follow all warnings and instructions given by the manufacturers of the products used for repairs.

This information is provided for your guidance only. We urge you to make all tests you deem appropriate prior to use. No warranties, either expressed or implied, including warranties or merchantability or fitness for a particular purpose, are made regarding products described or information set forth, or that such products or information may be used without infringing patents of others.

MAXIMUM CAPACITIES

6 PERSONS OR 990 LBS.

1122 POUNDS, PERSONS, GEAR

THIS BOAT COMPLIES WITH US COAST GUARD SAFETY STANDARDS IN EFFECT ON THE DATE OF CERTIFICATION

MANUFACTURER: HUNTER MARINE ALACHUA, FL

MODEL: H170

DESIGN COMPLIANCE WITH NMMA REQUIREMENTS BELOW IS VERIFIED. MFGR RESPONSIBLE FOR PRODUCTION CONTROL

LOAD CAPACITY * COMPARTMENT VENTILATION
STEERING, FUEL AND ELECTRICAL SYSTEMS
INTERNATIONAL LIGHTS* BASIC FLOTATION
MANEUVERABILITY

NATIONAL MARINE MANUFACTURES ASSSN.

HUNTER

H170 NMMA CAPACITIES CERTIFICATION PLATE

170503		None	01/28/03
ENG			

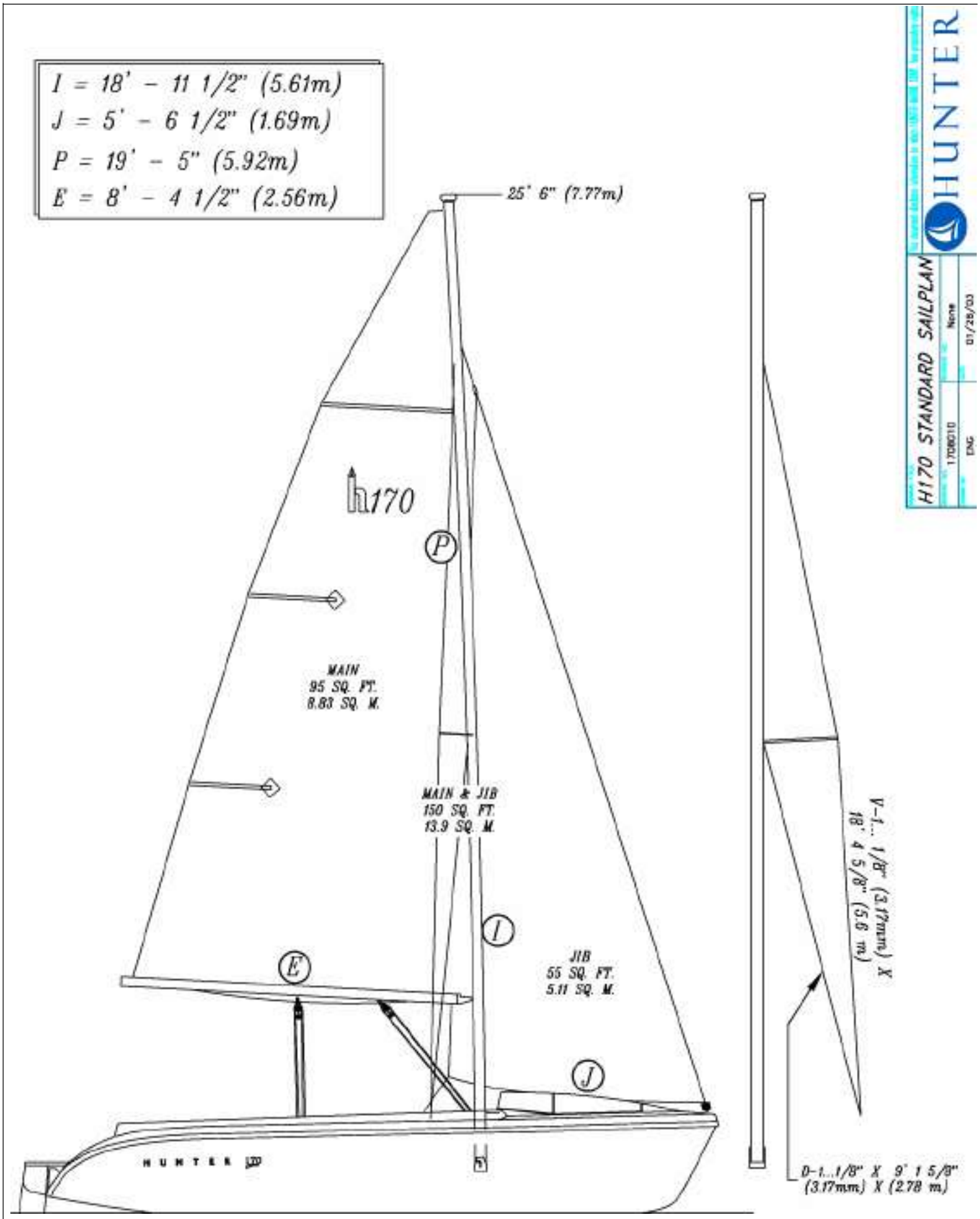
I = 18' - 11 1/2" (5.61m)
J = 5' - 6 1/2" (1.69m)
P = 19' - 5" (5.92m)
E = 8' - 4 1/2" (2.56m)
25' 6" (7.77m)
h170
P
MAIN
95 SQ. FT.
8.83 SQ. M.
MAIN & JIB
150 SQ. FT.
13.9 SQ. M.
I
E
JIB
55 SQ. FT.
5.11 SQ. M.
J
HUNTER
V-1... 1/8" (3.17mm) X
18' 4 5/8" (5.6 m)
D-1...1/8" X 9' 1 5/8"
(3.17mm) X (2.78 m)
HUNTER
H170 STANDARD SAILPLAN
1706010
None
03/28/03
ENG

DIMENSIONS, CAPACITIES, ETC.

DESCRIPTION: H170

Lenght overall (LOA)	16' 10" (
Beam (MAX)	7' 0" (2.
Draft: Centerboard up	6" (0.15
Centerboard down	4' 11"(1.
Displacement	480lbs (
Sail Area (TOTAL)	150sq.
Mast height	25' 6" (7
Engine (not supplied) size recom	3 H.P. M
Maximum loading (Persons/Luggage)	6 Perso = 1389l

▼ CAUTION ▼

Use a light colored material (white, tan, light grey) to cover your boat in order to minimize heat buildup and potential sun damage. Do not use a dark cover or dark shrinkwrap for storage.

HUNTER

H170 DIMENSIONS AND CAPACITIES

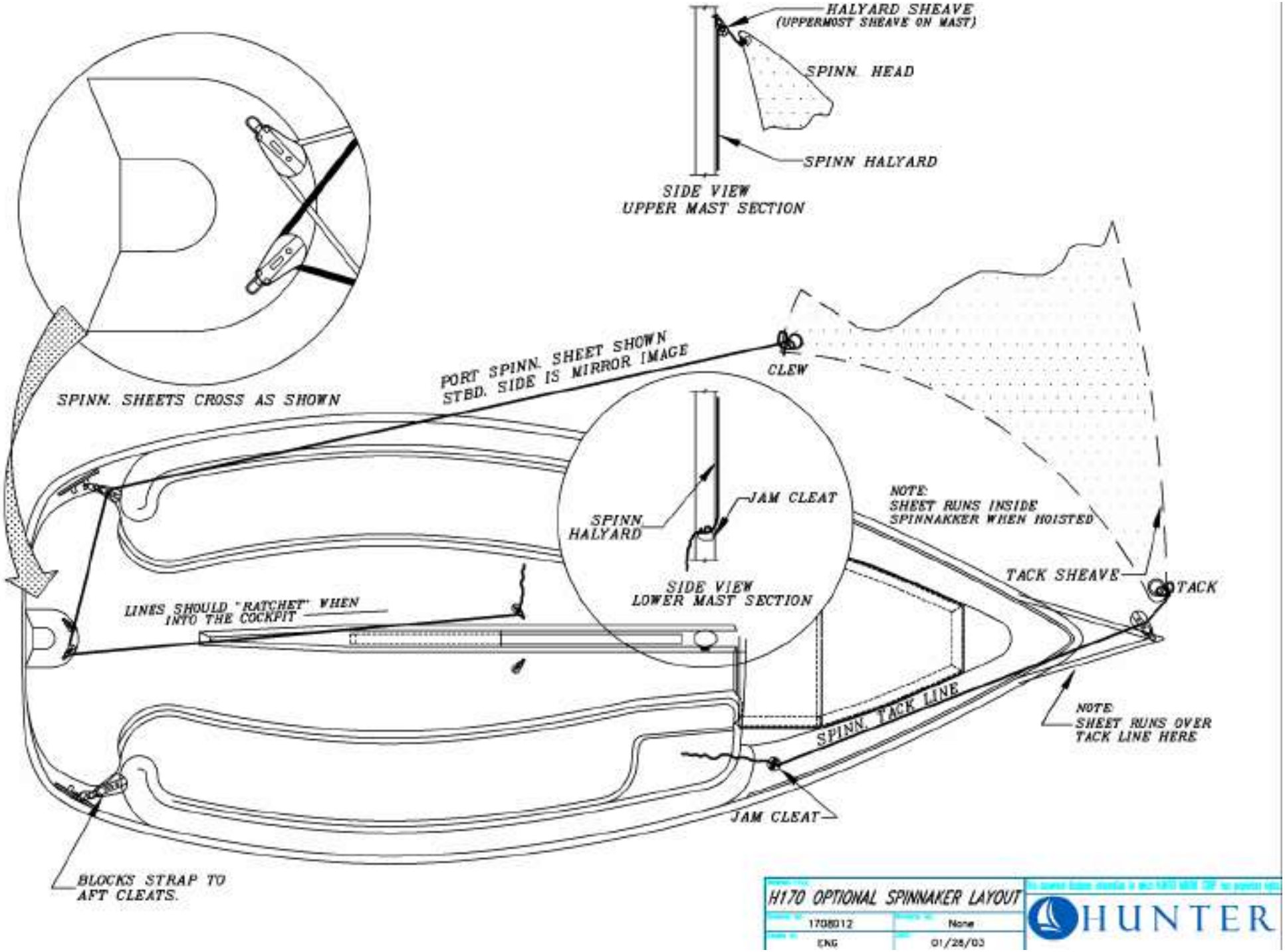
HALYARD SHEAVE
(UPPERMOST SHEAVE ON MAST)
SPINN. HEAD
SPINN HALYARD
SIDE VIEW
UPPER MAST SECTION
SPINN. SHEETS CROSS AS SHOWN
PORT SPINN. SHEET SHOWN
STBD. SIDE IS MIRROR IMAGE
CLEW
JAM CLEAT
SPINN. HALYARD
SIDE VIEW
LOWER MAST SECTION
NOTE:
SHEET RUNS INSIDE
SPINNAKKER WHEN HOISTED
TACK SHEAVE
TACK
LINES SHOULD "RATCHET" WHEN
INTO THE COCKPIT
SPINN. TACK LINE
NOTE:
SHEET RUNS OVER
TACK LINE HERE
JAM CLEAT
BLOCKS STRAP TO
AFT CLEATS.
H170 OPTIONAL SPINNAKER LAYOUT
1708012
None
ENG
01/28/03
HUNTER

HUNTER 170 OPTIONAL SPINNAKER KIT

INCLUDED:

1. BOW SPRIT FITTING WITH 5 # 12 X 2" STAINLESS STEEL PAN HEAD SCREWS.
2. TACK LINE SWIVEL CLEAT WITH 3 #10 X 1 1/2" STAINLESS STEEL FLAT HEAD SCREWS.
3. SPINNAKER HALYARD ARTICULA TING CLEAT FOR THE MAST WITH POP RIVETS.
4. 2 RATCHET BLOCKS WITH LANYARDS.
5. 4 SWIVEL BULLET BLOCKS WITH SPRING AND EYESTRAPS ASSEMBLY AND 8 #10 X 1" STAINLESS STEEL PAN HEAD SCREWS.
6. TACK LINE: 5mm X 15'.
7. SPINNAKER HALYARD: 1/4" X 45'.
8. SPINNAKER SHEETS: 1/4" X 70'.

TOOLS NECESSARY:

1. 1/16" DRILL BIT
2. PHILLIPS HEAD SCREW DRIVER
3. SIKAFLEX 291 OR 3M 5200

INSTALLATION:

THE BOW SPRIT FITTING IS DESIGNED TO BE REMOVED FOR TRAILERING OR NON-USE BY REMOVING THE SET SCREWS IN THE SOCKETS AND UNSHACKLING THE WIRE TAIL FROM THE BOW EYE. THE BOW SPRIT WILL HAVE A LITTLE PLAY IN THE ASSEMBLY WHEN THE SPINNAKER IS NOT SET. THE ASSEMBLY WILL FLEX DOWNWARD BUT WILL BECOME TAUGHT AS THE SPINNAKER FILLS AND THE WIRE TAIL COUNTERACTS THE UPWARD FORCE. DO NOT USE THE BOW SPRIT TO PICK THE BOAT UP OR MANUVER THE BOAT AROUND...AND DO BE CONSCIOUS OF ITS OVERHANG WHEN DOCKING THE BOA T!

1. PLACE THE BOW SPRIT ON THE BOW OF THE BOAT ABOVE THE PROFILE SUCH THAT THE CENTER MOUNTING HOLE ON THE BOW SPRIT IS ALIGNED WITH THE STEM HEAD FITTING. THE BOW STRAP SHOULD BE MOUNTED APPROXIMATELY 1/4" TO 1/2" ABOVE THE PROFILE SO THAT THE SET SCREWS IN THE SOCKETS DO NOT BOTTOM OUT ON THE PROFILE. THE BOW STRAP IS FLEXIBLE AND INWARD PRESSURE SHOULD BE APPLIED WHEN LINING UP THE SPRIT TO ASSURE THE "BEST" FIT TO THE CONTOUR OF THE BOW. MARK THE CENTER HOLE IN THE BOW STRAP AND THE 4 HOLES IN THE SOCKET FITTINGS. THE GOAL IS TO MOUNT THE SPRIT LEVEL AND WITH AS LITTLE GAP AS POSSIBLE BETWEEN THE BOW STRAP AND THE BOW OF THE BOAT. PRE-DRILL THE HOLES WITH THE 1/16" DRILL BIT AND APPLY A VERY GENEROUS AMOUNT OF SEALANT AROUND THE PILOT HOLES AND THE ENTIRE BOW STRAP SURFACE. SCREW IN THE FOWARD MOUNTING SCREW AND SNUG THE SCREW. INSTALL THE 4 AFT SCREWS IN A SIMILAR FASHION. AGAIN, THE GOAL IS TO MOUNT THE STRAP AS FLUSH AND SNUG TO THE BOW AS POSSIBLE.

3. MOUNT THE TACK LINE BLOCK ON THE STARBOARD DECK AT THE LOCATION PER THE PREVIOUS PAGE, BY PRE DRILLING AND CAULKING THE HOLES.

4. MOUNT THE 4 BULLET BLOCKS WITH SPRINGS IN GIVEN LOCATIONS.

5. MOUNT THE SPINNAKER HALYARD BLOCK TO THE MAST 4" BELOW THE GOOSENECK ON EITHER THE STARBOARD OR PORT SIDE OF THE MAST.

6. ATTACH THE RATCHET BLOCKS TO THE CENTER OPENING OF THE AFT MOORING CLEAT AT POSITION LOOPING THE LANYARD THROUGH THE BLOCK AND CLEAT SEVERAL TIMES TO AVOID EXCESSIVE CHAFFING OF THE LINE.

THE SPINNAKER HALYARD IS LEAD TO THE SWIVEL BLOCK ON THE MAST ABOVE THE UPPERS AND JIB A TTA CHMENT. THE TACK LINES RUN FROM THE CLEAT, THROUGH THE BLOCK ON THE TIP OF THE SPRIT AND TO THE TACK OF THE SAIL. THE SPINNAKER SHEETS ARE CONTINUOUS AND RIGGED PER THE PREVIOUS DIAGRAM.

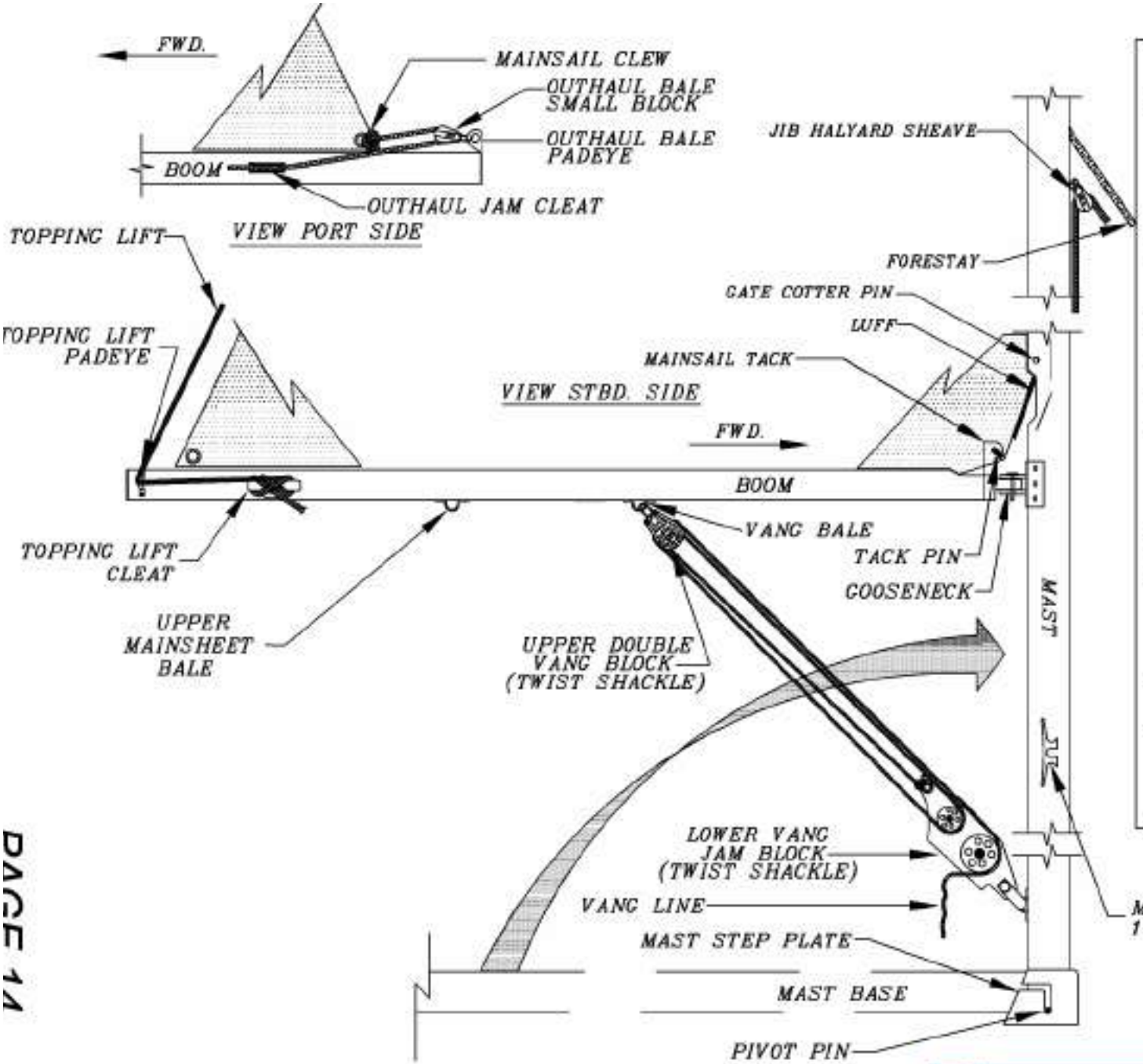

ASSEMBLY ORDER

1. AFTER ATTACHING THE SHROUDS & FORESTAY TO THE MAST & THE BOOM TOPPING LIFT TO THE TOP OF THE MAST, INSTALL THE MAST BASE INTO THE MAST STEP. RAISE THE MAST AND ATTACH ATTACH THE FORESTAY AND THE SHROUDS TO THEIR APPROPRIATE DECK FITTINGS.
2. ATTACH THE BOOM TO THE GOOSENECK.
3. ATTACH THE TOPPING LIFT TO THE BOOM.
4. ATTACH THE MAINSHEET PURCHASE.
5. ATTACH THE VANG.
6. SLIDE THE MAINSAIL CLEW INTO THE GROOVE ON THE BOOM AND ATTACH THE OUTHAUL. BEGIN EXTENDING THE SAIL AFT BY PULLING THE OUTHAUL LINE.
7. REMOVE THE GATE COTTER PIN.
8. SLIDE THE MAINSAIL LUFF UP INTO THE LUFF GROOVE ON THE MAST. RAISE THE MAINSAIL WHILE "FEEDING" THE LUFF INTO THE LUFF GATE TO AVOID "BINDING" THE SAIL.
9. ATTACH THE MAINSAIL TACK TO THE GOOSENECK TACK PIN.
10. RAISE THE MAINSAIL BY PULLING ON THE HALYARD WHILE CONTINUING TO GUIDE THE SAIL LUFF INTO THE LUFF GROOVE OF THE MAST.
11. INSTALL THE GATE COTTER PIN.

H170 MAINSHEET/BOOM DETAILS		HUNTER
1708014	None	
ENG	01/28/03	

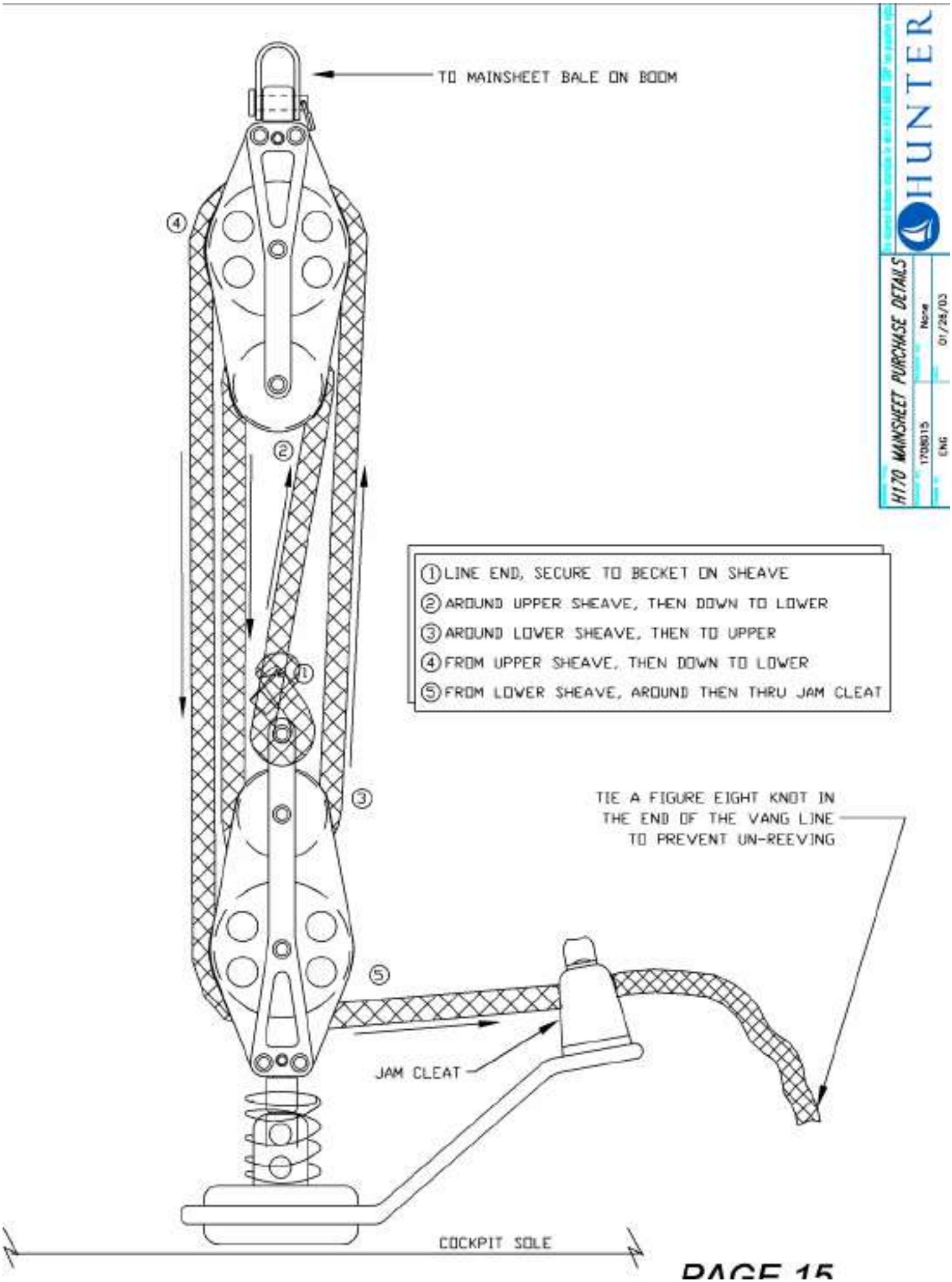
TO MAINSHEET BALE ON BOOM
④
②
①
③
⑤
① LINE END, SECURE TO BECKET ON SHEAVE
② AROUND UPPER SHEAVE, THEN DOWN TO LOWER
③ AROUND LOWER SHEAVE, THEN TO UPPER
④ FROM UPPER SHEAVE, THEN DOWN TO LOWER
⑤ FROM LOWER SHEAVE, AROUND THEN THRU JAM CLEAT
TIE A FIGURE EIGHT KNOT IN THE END OF THE VANG LINE TO PREVENT UN-REEVING
JAM CLEAT
COCKPIT SOLE
HUNTER
H170 MAINSHEET PURCHASE DETAILS
1708015
None
ENG
01/28/03

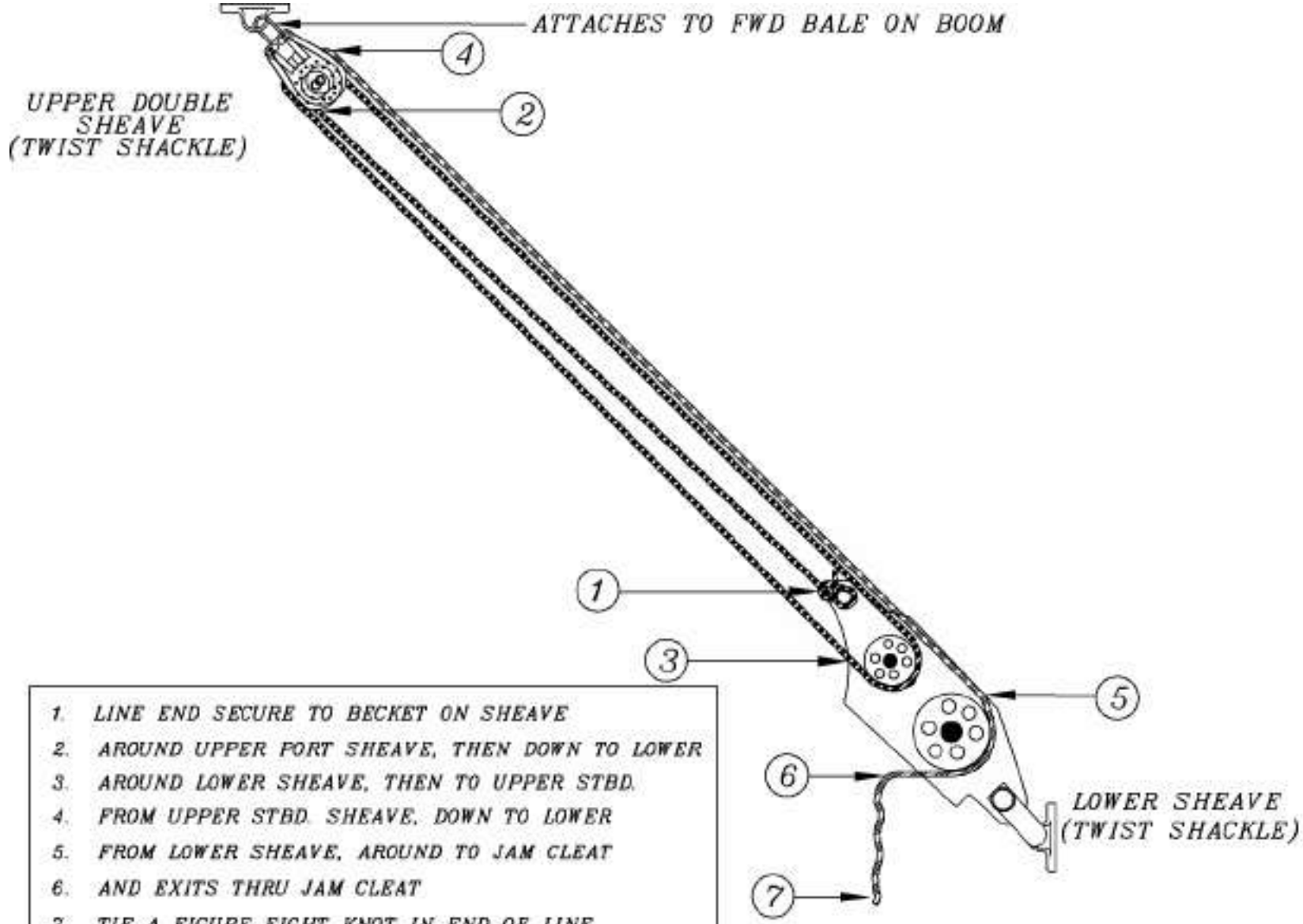

1. LINE END SECURE TO BECKET ON SHEAVE
2. AROUND UPPER PORT SHEAVE, THEN DOWN TO LOWER
3. AROUND LOWER SHEAVE, THEN TO UPPER STBD.
4. FROM UPPER STBD. SHEAVE, DOWN TO LOWER
5. FROM LOWER SHEAVE, AROUND TO JAM CLEAT
6. AND EXITS THRU JAM CLEAT
7. TIE A FIGURE EIGHT KNOT IN END OF LINE TO PREVENT UN-REEVING

H170 BOOM VANG DETAILS		HUNTER
1708016	None	
ENG	01/28/03	

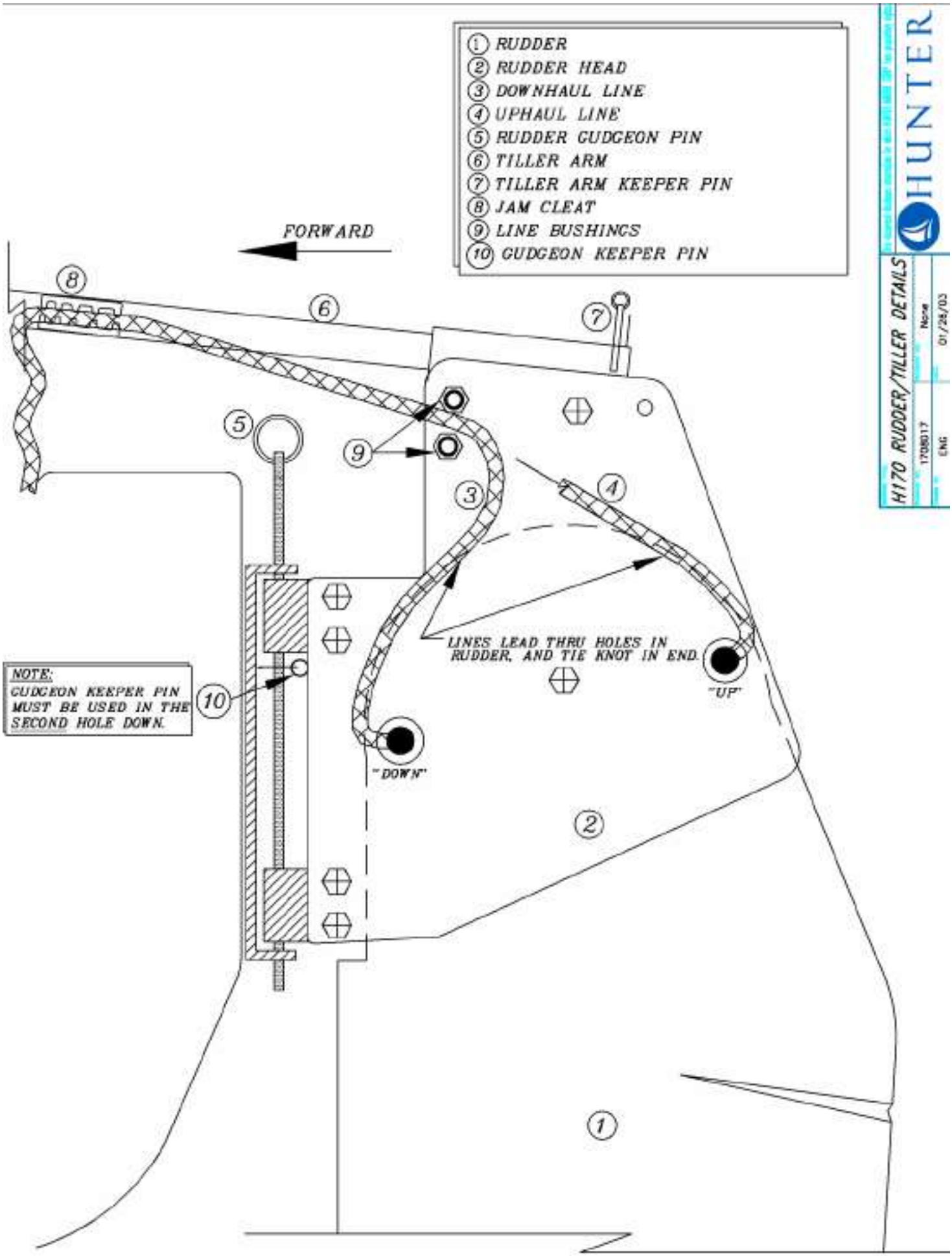
1 RUDDER
2 RUDDER HEAD
3 DOWNHAUL LINE
4 UPHAUL LINE
5 RUDDER GUDGEON PIN
6 TILLER ARM
7 TILLER ARM KEEPER PIN
8 JAM CLEAT
9 LINE BUSHINGS
10 GUDGEON KEEPER PIN
FORWARD
NOTE:
GUDGEON KEEPER PIN MUST BE USED IN THE SECOND HOLE DOWN.
LINES LEAD THRU HOLES IN RUDDER, AND TIE KNOT IN END.
"UP"
"DOWN"
HUNTER
H170 RUDDER/TILLER DETAILS
None
01/28/03
170B017
ENG

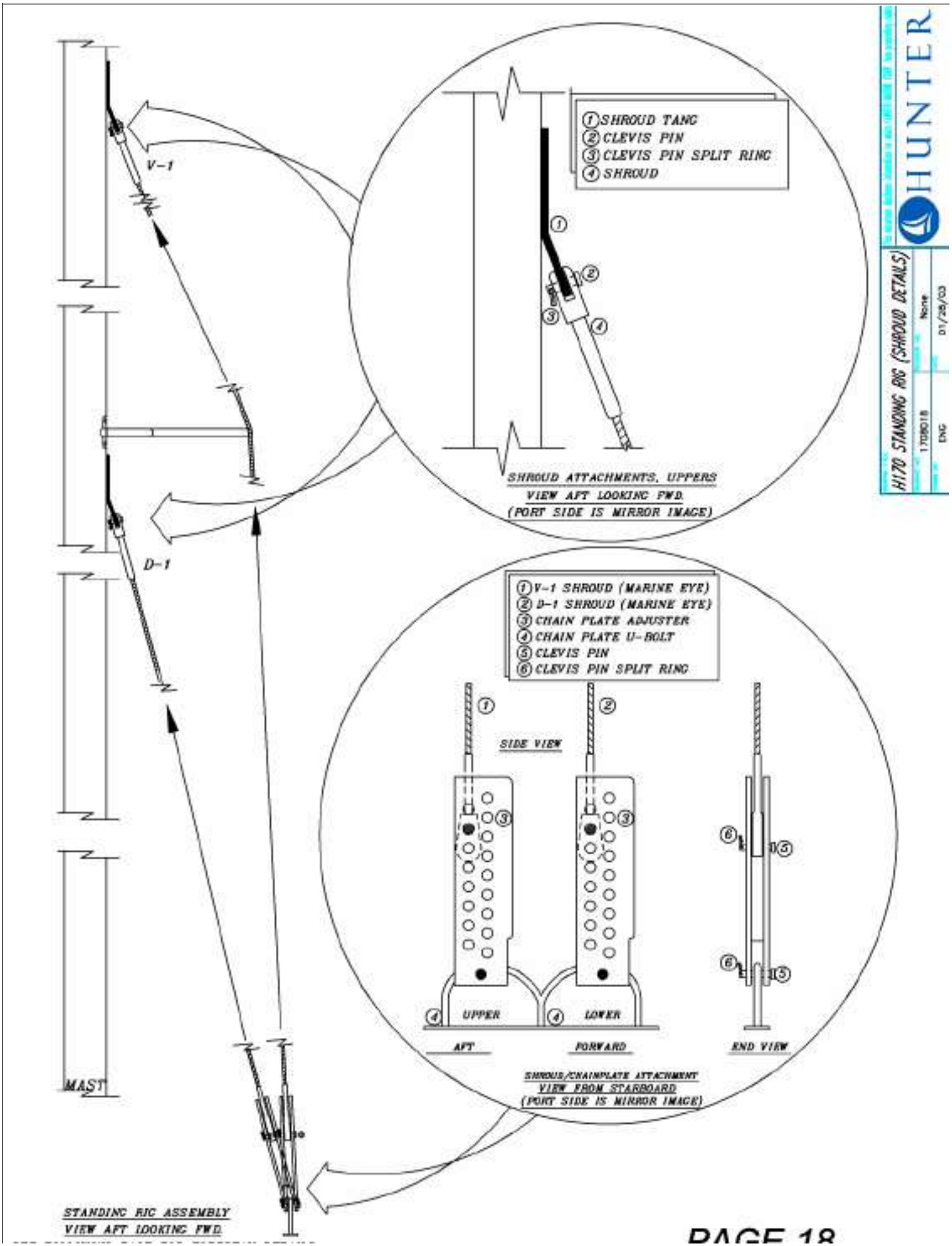
HUNTER
H170 STANDING RIG (SHROUD DETAILS)
1708018
None
ENG
01/28/03
V-1
D-1
MAST
1 SHROUD TANG
2 CLEVIS PIN
3 CLEVIS PIN SPLIT RING
4 SHROUD
SHROUD ATTACHMENTS, UPPERS
VIEW AFT LOOKING FWD.
(PORT SIDE IS MIRROR IMAGE)
1 V-1 SHROUD (MARINE EYE)
2 D-1 SHROUD (MARINE EYE)
3 CHAIN PLATE ADJUSTER
4 CHAIN PLATE U-BOLT
5 CLEVIS PIN
6 CLEVIS PIN SPLIT RING
SIDE VIEW
UPPER
LOWER
AFT
FORWARD
END VIEW
SHROUD/CHAINPLATE ATTACHMENT
VIEW FROM STARBOARD
(PORT SIDE IS MIRROR IMAGE)
STANDING RIG ASSEMBLY
VIEW AFT LOOKING FWD.

UPPER FORESTAY/SHROUD/TOPPING LIFT ATTACHMENT

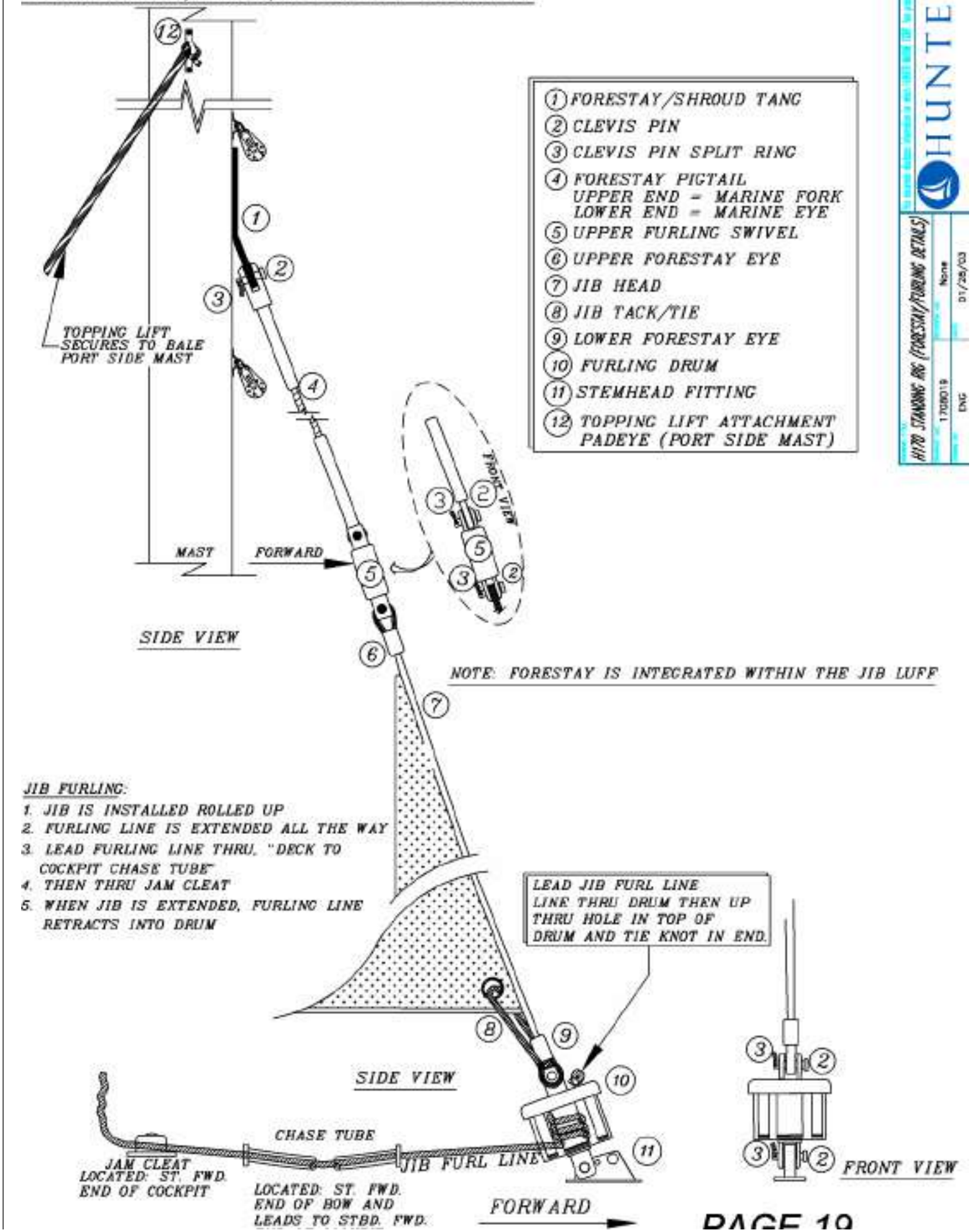

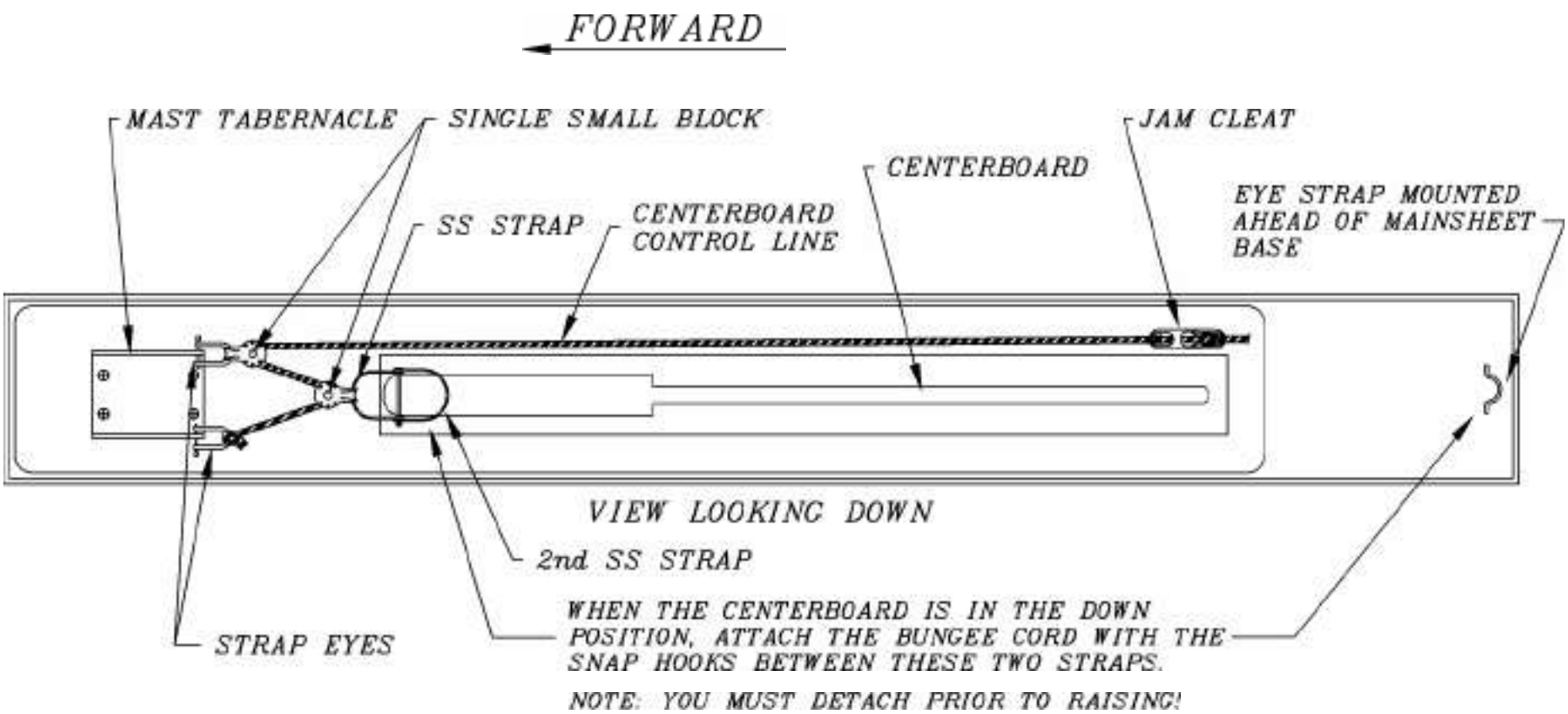

CENTERBOARD OPERATIONS:

TO RAISE: PULL CONTROL LINE AFT AND SECURE IN JAM CLEAT.

TO LOWER: RELEASE LINE FROM JAM CLEAT, AND LET DOWN SLOWLY

H170 CENTERBOARD DETAIL

1708021	None
ENG	01/28/03

HUNTER

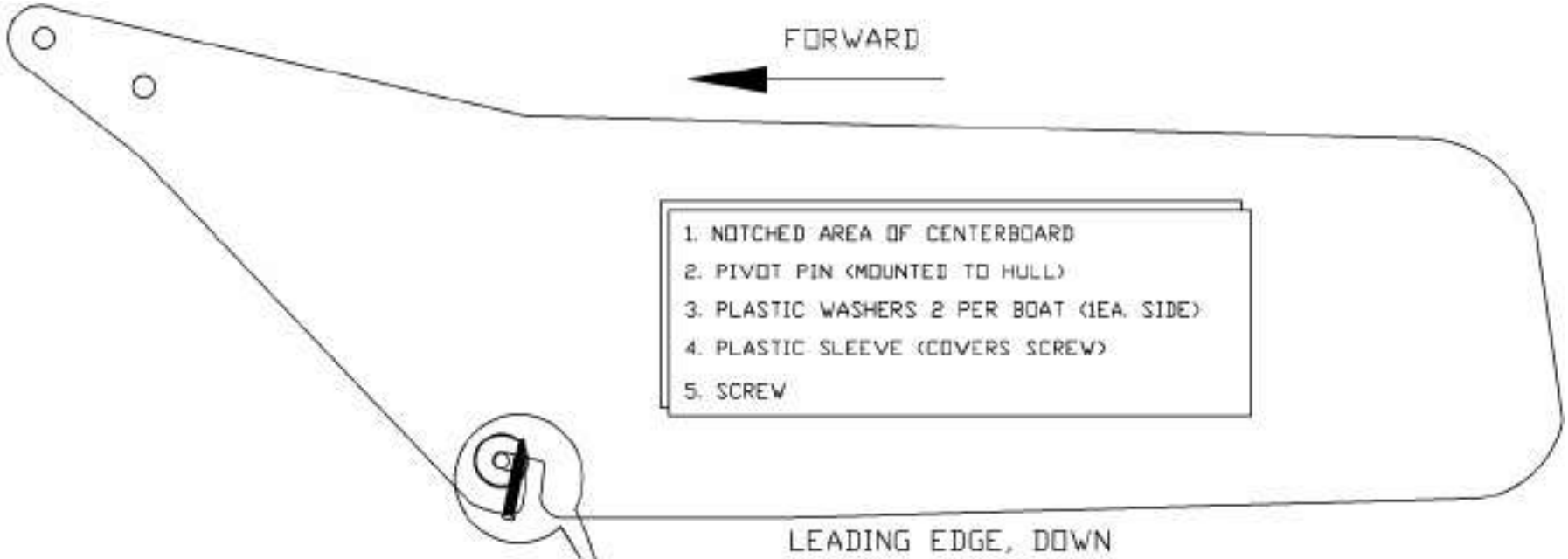

1. NOTCHED AREA OF CENTERBOARD
2. PIVOT PIN (MOUNTED TO HULL)
3. PLASTIC WASHERS 2 PER BOAT (1EA. SIDE)
4. PLASTIC SLEEVE (COVERS SCREW)
5. SCREW

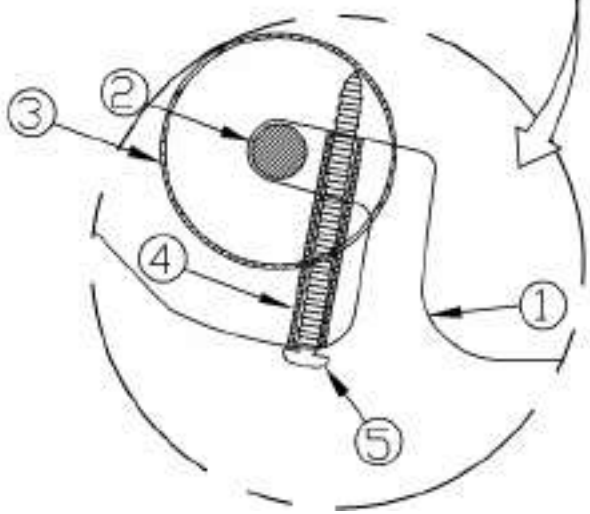

SIDE VIEW OF INSTALLED CENTERBOARD

CENTERBOARD INSTALLATION INSTUCTIONS:

1. REMOVE THE SCREW AND PLASTIC SLEEVE FWD. LOWER CENTERBOARD.

2. INSERT CENTERBOARD INTO THE TRUNK AND FIT NOTCH IN CENTERBOARD OVER THE PIVOT PIN INSIDE OF THE CENTERBOARD TRUNK. BE SURE THE CENTERBOARD IS IN BETWEEN THE PLASTIC WASHERS ON THE PIVOT PIN.

3. TURN THE BOAT ON ITS SIDE TO INSPECT THE INSTALLATION AND INSTALL THE SECURING SCREW AND THE PLASTIC SLEEVE. THIS WILL ENSURE THE CENTERBOARD IS SECURED ONTO THE PIVOT PIN.

H170 CENTERBOARD ASSEMBLY	
1708022	None
ENG	01/28/03

HUNTER