Owners Manual

Compromis 34

1 General

1.1 How to use the manual

This manual is meant to allow better and safer use of your **COMPROMIS.** We are convinced that this will enhance the pleasure you get out of our quality product.
This manual contains specific information concerning the boat, the equipment provided or installed, as well as its use and maintenance.
Read this manual carefully and get yourself acquainted with your boat before sailing.

We are happy to hear from you if there are any questions, comments or suggestions regarding these instructions, since good feedback will allow us not only to improve our service, but also - hopefully - to satisfy many other **COMPROMIS** owners in the future.

"Keep this manual in a safe place on board and pass it on to the new owner if you sell the boat".

1.2 Manufacturer

Sales:

Yachtswerf Zaadnoordijk bv.
Lagendijk 7
NL - 1911 MT Uitgeest

Shipyard:

Friesland Polyester bv
Leeuwarderstraatweg 119[b]
NL - 8441 PK Heerenveen

1.3 Type

COMPROMIS 34 Class

1.4 Category

In accordance with the valid European directives, your boat belongs to category A (ocean). This means that it is:

Designed for long passages, primarily of independently operating boats; where the wind force may be more than 8 (Beaufort) and the characteristic wave height exceeds 4 meters.

2 Description of the boat

2.1 Specifications

Description	Ab-breviation	Value	Unit
Overall length	Loa	10,30	m
Hull length	Lr	10,00	m
Length of the water line	LWL	8,30	m
Beam	Boa	3,47	m
Draught long keel		1,75	m
Draught short keel*		1,50	m
Overhead clearance with standing mast (excl the antennae),		15,00	m
Displacement / mass	Disp	5500	kg
Ballast		2200	kg
Lightship plus ballast (incl. equipment)		5400	kg
Maximum crew		6	
Berths		4/5	
Headroom in the main saloon		1,90	m
Headroom in the passageway to the galley		1,71	m
Headroom in the aft cabin		1,65	m
Headroom in the forecabin		1,77	m
Tanks			
Fuel tank stainless steel		100	l
Drinking water tank		200	l
Sewage tank HDPE		60	l
Gas bottle		5.2	kg
Sail area (length of the mast 15,40 m)			
Mainsail		26,45	m²
Mainsail Stowaway		23,2	m²
Roller-reefing genoa I		36,00	m²
Roller-reefing genoa II		31,20	m²
Storm jib		6,0	m²
Genoa I		31,20	m²
Balloon sail		55,30	m²
Spinnaker		82,00	m²

2.2 Technical specifications

Component	Make	Type / description
Engine		
Manufacturer / type	Yanmar	3GM30
Power		20,1 kW / 3400 rpm
Fuel		Diesel
Drive	Yanmar	Saildrive SD20
Screw propeller		2 blades, 16x13 LH (fixed)
Electrical installation		
-On-board mains supply (DC)		12 V
Fuse		125 A
Battery (starting)	Delco	1x105 Ah
Battery (load)	Delco	1x105 Ah
-On-board mains supply (AC)*		220 V
Earth leakage circuit breaker		16 A
Loader	Philippi	BL12/32-2

*= Option

2.3 Drawings

Several drawings are enclosed at the end of this chapter:

3 Installations

The following paragraphs provide an overview over all installations found on board of your Compromis. At the end of this chapter you will find diagrams showing the individual installations.

3.1 Shut-off valves, cocks and skin pipe fittings

Your COMPROMIS is equipped with two categories of shut-off valves - seacocks and other cocks.

3.1.1 Skin pipe fittings

The diagrams found in the appendix show all locations where the pipes communicate with the outside. Apart from all metal skin pipe fittings for the seacocks, this includes the drainage points of the anchor locker, the gas locker and the aeration points of the various tanks as well as the engine exhaust.

3.1.2 Seacocks

The appendix shows details concerning the location of the seacocks. It is recommended to close the seacocks during the owner's absence. The following figure shows a ball valve. A lever oriented in the direction of the tube (stand A) is open; while a lever position perpendicularly to the tube means that the passage is closed (B).

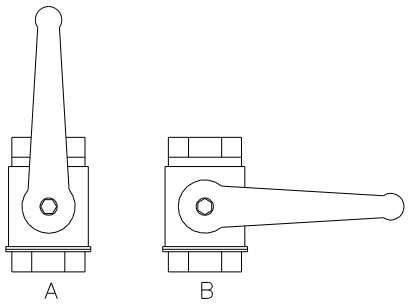

Fig: Ball shut-off valve

ATTENTION: Do not close the seacocks of the self-draining cockpit system unless there is a leakage.

Caution: If you close the cooling water shut-off valve of the saildrive when leaving the boat, make sure to open it again **immediately** upon your return. Starting the engine without opening this cock will cause considerable damage on board.

ATTENTION: Before you go sailing, make sure to close the shut-off valves (seacocks) of the sink (in the galley), the washbasin and the toilet.

3.1.3 Cocks and shut-off valves

The diagrams showing the individual systems also include cocks and shut-off valves. In this case, too, make sure to comply with the following maintenance suggestions.

3.1.4 Maintenance

Completely open and close all shut-off valves several times per year to verify that they function well. This is to prevent them from getting stuck and thus to cause problems just when they are needed most.
Carefully fasten or put away all loose equipment in the ship to keep it from sliding (to prevent damage).

Attention: Before laying up for the winter, completely open and close the shut-off valves repeatedly to drain off all water. Then leave the shut-off valve half open to minimize the risk of freezing.

One a year, check the shut-off valves for damage and leakages and make sure that they function well. This should preferably be done before taking the ship out of winter storage and launching it again.

3.2 Fire extinguishers, fire prevention and escape routes

Fires are classified according to the following categories:

Category	Description
A	Solid fires (wood, paper etc.)
B	Liquid fires (oil, gas etc.)
C	Gas fires
D	Metal fires

Your COMPROMIS is equipped with portable fire extinguishers with the following fire extinguishing capacity, located in the following places:

Number	Location	Fire classification	Filling volume / capacity
1	Behind the stairs, next to work top partition	A,B,C	Powder, 2 kg
2 option	Sink cupboard above the engine compartment. **Attention**: fixed arrangement !	A,B,C	Powder, 2 kg
3	Aft cabin, corner between the bed and the main partition	A,B,C	Powder, 2 kg

The owner is responsible for:

- regularly checking the fire extinguishers in accordance with the manufacturer's instructions or according to your insurance company's guidelines.
- replacing old or outdated fire extinguishing equipment by the same type or by one with a higher capacity.
- pointing out to the crew:
  - the location and function of the fire extinguishers.
  - the locations of the escape hatches.
- making sure that the fire extinguishers are easily accessible while the boat is in use.

CAUTION:

Make sure:

- that the exit route through the companionway respectively the escape hatches is never blocked.
- that the safety control levers, such as fuel cocks, gas cocks (ed.) and switches for the electrical system, are never blocked.
- access to the portable fire extinguishers in the boxes is never obstructed.
- never to leave the boat while any cooking equipment or heating systems are activated.
- never to use gas lamps on the boat.
- never to modify any systems inside the boat (particularly not the electrical, fuel and gas systems).
- never to refuel or to exchange gas bottles while the engines are in motion or while the cooking or heating systems are active.
- never to smoke while handling fuel or gas.

Keep the bilges clean and regularly check for possible gas and fuel leakage.

If you exhange parts of the fire extinguishing system, use only matching parts with the same connection specifications resp. with the same technical data and fire-resisting capacities as the original parts.

Never hang up loose curtains or other textiles in the immediate vicinity of the gas stove or above the gas stove or other equipment with open flames.

Flammable materials should never, under any circumstances, be stored in the engine compartment. When storing non-flammable materials in the engine compartment, make sure that these materials are protected to keep them from falling into the machines; they may not create an impediment either to the access or the exit.

Fire extinguishing

If there is a fire use one of the fire extinguishers. Remove the locking pin and direct the fire extinguisher with the nozzle facing the seat of the fire. Squeeze the handle and spray the extinguishing powder over the seat of the fire. Stop immediately as soon as the fire is extinguished. One extinguisher contains enough powder to extinguish an incipient fire.

In the case of a fire inside the engine compartment, keep fresh air from entering and prevent the fire from blazing up. Use the fire extinguisher (2), if installed, to extinguish the fire without having to open the portholes. Pull the locking pin out of the fire extinguisher (leaving the fire extinguisher itself inside the holder!) and then squeeze the handle. As a result, the extinguishing agent - through a pipe - is injection directly into the engine compartment.

Do not forget to read the instructions on the fire extinguisher!

Caution: Remember that hazardous flue gases may be released during a fire!
Prevent suffocation !

Escape routes

In an emergency situation, choose the nearest emergency exit, for instance one of the escape hatches (marked with an ISO symbol) or escape through the companionway. In almost all cases, the escape routes allow you to escape without having to pass the seat of a fire.

3.3 The fuel system

Your Compromis is equipped with a Yanmar diesel engine that serves as a power supply. The diagram found in the appendix shows the primary components of this engine. For further details please see the Yanmar documentation.

3.3.1 Refuelling

When refilling diesel fuel, use the opening with the red filler neck (labeled DIESEL).
The inlet opening is located on the starboard side in the gangway near the sheet winches. The tank is located at the center of the ship, underneath the galley work top, in front of the engine compartment.

While refuelling, closely monitor the fuel level in the tank by reading the corresponding meter on the instrument panel. Never fill up the tank more than approx. 90%. At high summer temperatures or while cruising, fuel may penetrate into the bleed pipe. The bleed pipe is equipped with a little tank that serves as a "buffer" to trap this fuel overflow. If you fill in too much fuel, this buffer tank capacity may be insufficient and fuel may escape via the bleed pipe to be released into the environment. The bleed pipe exits at starboard, underneath the stretcher near the tank cap.
If you happen to spill any fuel onto the water, immediately add dishwashing liquid (detergent) to trap the fuel as soon as possible and thus to limit the ecological damage.

Use only tanks designated for recreational use. Professional installations have a much larger capacity which may lead to diesel fuel spillage, thus damaging the tank and the filler pipe!
All metal parts of the fuel pipes have an earth connection to prevent fires caused by static discharge.

After refuelling, close the tank cap carefully to prevent water from leaking into the tank.

3.3.2 Maintenance

Regularly check the coarse filter / water separator for dirt and water. Drain off the water by opening the screw underneath the filter. For details on how to deaerate the system please see the engine documentation.
Each year, check the couplings and tubing for tears and leakage. In the case of severe damage, replace the defect parts by new ones with the same specifications. Details are available at your shipyard.
The tubing and the components should only be replaced by original, approved parts.

The fuel tank is not equipped with a water drainage valve. If water gets into the tank (by contaminated fuel or an insufficiently closed feed opening), use the (supplied) hand pump to remove this water from the tank. To this end, push a tube through the feed opening into the tank and pump up water until you see diesel appearing once more.

3.4 The engine and the engine compartment

3.4.1 The engine

This manual includes the original Yanmar manuals containing thorough information about the built-in diesels and the saildrive. Observe these instructions carefully; they are supplemented by the instructions in this paragraph. In conjunction with the engine warranty please contact the nearest Yanmar dealer. For details please see the refuelling instructions in the paragraph describing the "fuel system".

Starting the engine.

1) Check the engine oil level, the coolant level and the fuel level.
1) Check whether the fuel and cooling water cock (saildrive) are open.
2) Turn on the main switch.
3) Turn the contact key in clockwise direction; you will hear the alarm sound for the engine oil pressure.
4) Press the black starter button until the motor starts

Do not allow the starting motor to run for more than 5 seconds without interruption (so as not to overheat the starting motor). You may try again after several seconds. If the motor cannot be started even after repeated attempts, check:

1) Whether the strater button is fully pressed
2) Whether the engine fuel supply is functioning well (air in the pipes; blocked filter).
3) Or consult a specialist.

In cold conditions it might be impossible to start the engine right away. In this case inject extra fuel while starting. Press the red (free-standing) button of the morse handle on the steering column and push the lever forward (accelerating).

Turning off the engine.

1) Turn the morse handle on the steering column to neutral and reduce the engine speed until it runs idle.
2) Then pull the black stop button, the alarm.sounds
3) Turn the contact key to the left (anti-clockwise).
4) Press the stop button

If you accelerate very rapidly (quickly increasing the engine speed), the oil cannot burn completely - especially if the engine is still cold; in this case it will give off black smoke.

ATTENTION: Never switch directly from full speed ahead into reverse; instead, reduce the engine speed first until it runs idle to prevent damaging the reverse gear.

3.4.2 Engine maintenance

The Yanmar manual contains full information regarding the maintenance of the engine. Follow these instructions carefully.

Before using the engine, check whether the weed filter is contaminated and, if necessary, clean it.

Regularly check the liquid level in the expansion tank of the engine cooling system. Air may be released in the intercooler system, thus reducing the coolant level - especially in new boats. If your boat is equipped with a hot water supply, this phenomenon is likely to occur more frequently.
Thus, pay attention, especially if the engine or the boiler have recently been repaired.

Laying up for the winter

Drain the outboard water cooling system and fill it with antifreeze:
1 Let the engine run warm at operating temperature and then turn it off.
2 Close the cooling water tap of the saildrive.
3 Remove the tube from the water tap and immerse it in the antifreeze mixture (1 part antifreeze per 2 parts of water: a total of 5-6 liters).
4 Now start the engine and let it run until the mixture is used up.
5 Reconnect the tubing to the water tap.
6 NOTE: The saildrive will drain by itself.

After the winter:
1 Open the cooling water tap and start the engine.
2 Check the cooling water discharge after ± 5 minutes.

For further details please see the manufacturer's documentation.

3.4.3 The lay-out of the engine compartment

The following diagram shows the individual components of the engine compartment, including the primary parts. The options are marked with a (*). The bottom of the engine compartment is an impermeable save-all. Possible oil leakages are trapped here and are thus prevented from reaching the bilge. The save-all is completely smooth and easy to clean.

Spilled oil and antifreeze should never be discharged as regular waste; they are to be treated as chemical waste.

Fig: The lay-out of the engine compartment

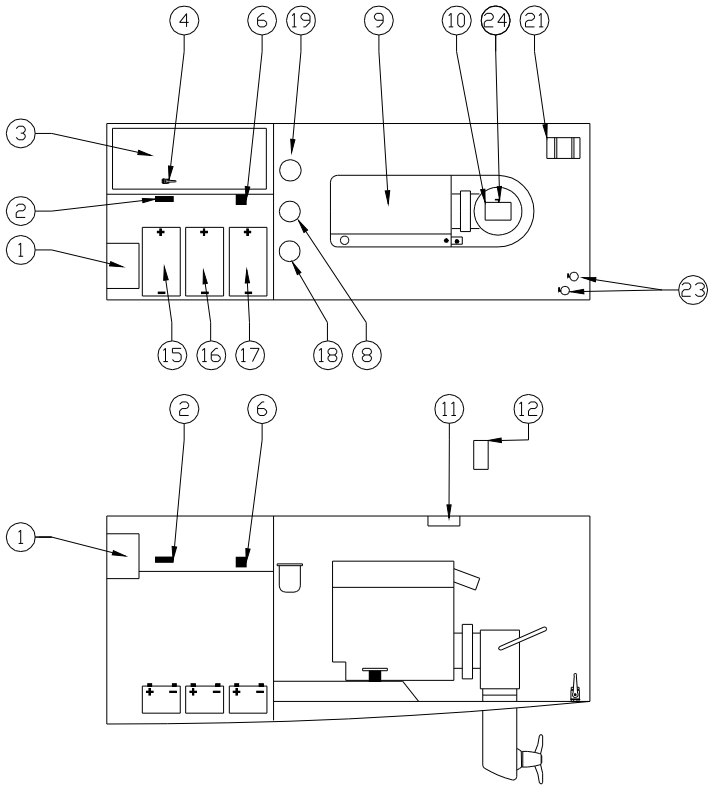

1 Battery charger
2 Main fuse
3 Fuel tank
4 Fuel shut-off valve
6 Diode
8 Fuel filter
9 Motor
10 Saildrive
11 Lamp
12 Aeration tank water lock

15 Load battery
16 Extra load battery *
17 Starting battery
18 Settling tank
19 Expansion tank for the cooling water

21 Water lock

23 Shut-off valves of the cockpit self-draining system
24 Cooling water shut-off valve Saildrive

* = Option

3.5 The gas installation

The gas installation was designed with considerable care. The system was thoroughly checked and complies with the valid legal requirements. Gas may be hazardous if handled negligently or if the installation receives insufficient maintenance.

The gas system contains propane. Never exchange the content of the bottles for butane or LPG. The pressure reduction valve is set to an operating pressure of 50 mbar. Never change it to any other pressure; if the valve is to be replaced, always select a new one with the same pressure value.

The diagram of the gas system shows the most important parts, together with their respective positions and the routing of the tubes throughout the inside of the boat.

The gas bottle (volume: 12.1 liters) is located in a separate gas locker. Each bottle contains enough gas for one sailing season (at average use). When planning a long passage, make sure to leave with a full bottle respectively take a full back-up bottle with you; this second bottle may also be stored in the gas locker.
The opening of the gas bottle is equipped with a safety valve in combination with a reducing valve.
The gas locker is accessible from the deck and offers enough space for bottles in use as well as back-up bottles. The bottom has an discharge opening to the outside to ensure that any gas leakages can escape directly. This is why it is important to keep this opening free at all times! Do not use the gas locker to store other objects in it.

ATTENTION: Keep the discharge opening of the gas locker free at all times!

Caution: Handle with care. Always count on possible leakages. Air concentrations of a mere 2% may create an explosive mixture.

3.5.1 Instructions for use

Make sure that the instrument shut-off valves are closed before opening the shut-off valve of the cylinder.

Never block the access to the gas system or its parts.

Keep the shut-off valves of empty gas bottles closed and disconnect them. Leave all covers, caps and plugs in place. Empty gas bottles are to be stored in the gas locker.

Keep the shut-off valves in the supply pipes and the shut-off valve of the gas cylinder closed as long as the the gas instruments are not in use. In an emergency situation the shut-off valves must be closed without delay. The precise locations of the shut-off valves are shown in the diagram.

ATTENTION: Never leave the boat alone as long as the gas system is still in use. Before going on shore, make sure that the main shut-off valve is closed.

All instruments, as long as they are active, use oxygen and emit combustion products. Good ventilation while using these instruments is therefore vital. Never ever use the stove to heat the cabin. Never close the vent holes located in the ceiling above the work top. For more information, please see the manual accompanying your stove.

A suitable ambient temperature for propane is between -10 and 50 °C.

Caution: If you smell gas, close the main valve, ask everyone to leave the boat, warn everyone in the neighborhood, extinguish all open fires and open the hatches.
You may reenter the boat once the gas smell is gone. Never take any risks with gas !

3.5.2 The safety valve

This safety valve is used to disconnect the gas supply in the following cases:
1) The ambient temperature rises above 120 °C. (For instance if there is a fire in the vicinity of the gas bottle).
2) A tube broke or the tube or the regulator has been disconnected.

In the first case, the safety valve cannot be reused. In the second case, the safety valve may be reused after repairing the tube fracture or reconnecting the tube. To activate the safety valve, press the reset button on the side (silver-colored button, perpendicularly underneath the pressure regulator).

After opening the bottle shut-off valve, wait for at least one minute before activating any consumer equipment.
The safety valve may also be used to check the system for possible leakages (for details please see the paragraph on "leakage tests").

3.5.3 The reducing valve

The reducing valve ensures a constant gas pressure (50 mbar) throughout the low-pressure part of the gas system.

Caution: Never change the operating pressure of the reducing valve, since this may damage the gas equipment and create life-threatening situations (explosions).

3.5.4 The gas shut-off valve (12V) *

As an additional option you may equip your Compromis with an electric gas bottle shut-off valve which allows you to close the gas bottle from a distance if you wish to stop the gas supply. The corresponding switch is installed next to the box above the work top. The

reducing valve carries a solenoid shut-off valve. The 12V power supply reaches the instrument panel via a separate switch.
Before leaving the boat (to go on shore), make sure to close the bottle shut-off valve.

3.5.5 The stove

All stoves supplied by us are thoroughly protected against overheating. The COMPROMIS features semi-gimballed stoves. If the stove is not in use, it should preferably be kept from moving. Before using it, first open the shut-off valve of the gas bottle. The open the shut-off valve for the stove, making sure that the arrow points in the direction of the tube. Now the stove is ready for use.
Turn the selected button into the desired position. Press it and ignite the burner. Keep the button pressed for approx. 1/2 minute and then let go slowly. The stove should keep burning.

After use, always make sure to close the shut-off valve of the stove (in the evenings, also close the shut-off valve of the gas bottle).
Please also consult the enclosed manufacturer's documentation.

3.5.6 Maintenance

The safety of a given gas installation depends entirely on the quality of maintenance. This is why it is so important to carefully comply with the manufacturer's instructions and to remain alert at all times.

Tubing, couplings and discharge openings
Every two years - when getting ready for the season - replace the gas tubing on the stove and the gas bottle, preferably by original tubing. Approved tubing is at least labeled with the following data:
- Year of production
- Internal diameter of the tubing (8 mm)
- Admissible maximum operating pressure.
- ISO 10293.2 or ISO 2928

- While exchanging the tubing, mind the left-turning nut.
- Always check all connections for leakages (see instructions under "leakage test").
- The tubing must be checked regularly, at least once a year. Tubing that is damaged in any way must be replaced.
- Flue gas discharge opening pipes must be checked at least once a year. Immediately replace any pipes that are damaged or punctured.
- The membrane of the reducing valve will slowly age with time. It should be replaced once every four years.

Exchanging a gas bottle
Your COMPROMIS is equipped with a propane system. Exchange the used bottles for new propane bottles only. Use exclusively propane to refill the old ones - **never ever use butane**!

ATTENTION: Smoking and open fires are prohibited while exhanging gas bottles.

Instructions concerning the exchange of a gas bottle.
1) Close the shut-off valve on the gas bottle

2) Now open the safety valve of the bottle. Note that the nut is fastened by turning it anti-clockwise (to the left) and loosened by turning it clockwise (to the right). Leave the reducing valve well attached to the safety valve.
3) Loosen the rope, exchange the bottle, and fasten it again carefully.
4) Check whether the sealing surfaces are smooth and clean.
5) Install the safety valve and check the sealing. Do not turn the nut too far to prevent damage to the rubber sealing. For a good sealing effect, check the aspects mentioned under "leakage test"
6) Press the reset button.

TIP
Ask your ship's chandlers, your local gas supplier or the camping shop whether they can refill your gas bottle for you. This will save you precious searching time once you need it unexpectedly.

The back-up gas bottle may also be kept in the gas locker.

Leakage test
Regularly check the entire system for leakages using the pressure gauge on the safety valve. Proceed as follows:
1) Open all shut-off valves in the instrument pipes.
2) Open the bottle shut-off valve and press the reset button (on the side underneath the pressure gauge) on the safety valve.
3) Align the red pointer on the manometer with the black pointer (screwdriver).
4) Close the bottle shut-off valve.
5) If the black pointer remains where it is (for 10 minutes), you have no leakage in your system.
   If, however, the black pointer on the pressure gauge drops to 0, you have a leakage in your system, in which case it must be put out of use until it is repaired.

The described technique, however, provides merely an indication. For details concerning a thorough leakage test, please contact a company possessing the HISWA "gas technology"certificate.

Finding leakages.
If you detect a pressure drop, try and find the leak by using soap water or liquid detergent.

ATTENTION: Ammonia, a component of some soaps and detergents, affects brass! Although the effect initially remains invisible, it is highly possible that the corresponding fittings begin to tear and leak with time.

Never try to repair the gas system on your own; make sure to ask an expert.

3.6 The electrical system (12 V)

3.6.1 General

Safety was one of the key aspects in designing this system. Hazardous situations may arise from inexpert modifications. Comply with the following instructions:

- Never work on the installation as long as it is in use.
- Never modify the electrical installation and the pertinent drawings in any way, unless this is done by a qualified electrical technician (for boats).
- Never change the nominal current or the overload protection.
- Never install any equipment, instruments or parts with a higher power value than the one listed on the on-board mains supply.
- Never leave the boat alone while the on-board mains supply is activated.

If you are not sufficiently acquainted with weak-current engineering, ask an expert for information before modifying or extending the system.
Never connect any other instrument to the engine battery - with the exception of the VHF-radiotelephone.

The control panel of your Compromis is a Mastervolt one; it is equipped with combined fuses / switches to protect the installation against shortages and overload. As soon as the corresponding group is activated, the little lamp in the switch will light up.
If a group is turned off by the automatic fuse, first try and find the underlying cause and alleviate the problem. Then turn the switch on again. For details please see the specific instructions in the paragraph about "fuses".
To prevent short-circuits while working on the system, make sure that the main switches are turned off respectively that the minus cables are detached from the batteries.

If any equipment (sender) is installed, never earth it on the keel, the stays or the steering gear to prevent electrolysis.

3.6.2 Batteries

Two batteries are used for the power supply of your COMPROMIS. These batteries are stored in the engine compartment. The battery at the back supplies the starting motor and the VHF-radiotelephone; the front battery (and the optional third battery) supplies the remaining loads.

The boat is normally equipped with Delco Voyager Marine M27MF (105Ah) type batteries. These are gas-tight, 'maintenance-free' batteries. The batteries cannot be refilled with electrolyte and have no vent holes communicating with the outside air (they do have an overpressure protection). Always make sure to replace the batteries by new batteries of the same type.
All Delco batteries possess a built-in charge indicator with a display on the battery lid.

Condition table DELCO charge indicator			
Color indicator	RED	BLACK	GREEN
Loading condition [%]	< 50	50-70	> 70

The classical liquid battery (not used) allows ventilation; the released gases must be discharged to the outside air. These batteries must be checked regularly to supervise the liquid level, the battery acid content and the acidity.
Battery acid is highly corrosive and very dangerous, and it should never come into contact with the eyes, skin or clothing. Any spillage is to be washed off immediately with plenty of fresh water. If necessary, contact a physician without delay.

3.6.2.1 Charging and discharging batteries

Attention: Always remember that the gas that is released while loading normal batteries is highly flammable! Good ventilation is therefore essential. Your Compromis is equipped with gas-tight, maintenance-free batteries. Always replace these batteries by new ones of the same type.

If the battery voltage is too low, the battery may be recharged using a battery charger. If this is done at low voltage (less than 14 V), the connection cables of the on-board mains supply may remain connected. If, however, a high-speed charger is used, disconnect both connection cables first.

If you use a high-speed charger, make sure to disconnect both connection cables. Always remember to disconnect the minus cable (the black one) first and then unplug the plus cable (the red one). When reconnecting the cables, always plug in the plus cable (the red one) first and then connect the minus cable (the black one). Never mix up the battery cables !!! You may start a fire by doing so.

Caution: A very low-voltage battery may already freeze at -10 °C. Frozen batteries should always be defrosted before being recharged, since they may otherwise explode!

3.6.2.2 Maintenance

The batteries are normally almost maintenance-free. At very high respectively very low temperatures, however, when the starter battery is exposed to very heavy loads, the batteries should be regularly checked. Delco batteries may remain on the boat during the winter, provided that:

1) The on-board loader remains active. In this case the battery set maintains its voltage and is in optimum condition when the sailing season begins in the spring.
2) If this is impossible in your case, you may disconnect the cables or remove the batteries to prevent a possible leakage current from discharging the batteries. The best option is to discharge the batteries and then to recharge them.

For details please see the instructions regarding "charging and discharging".

Exchanging batteries
Make sure not to cause short-circuits when disconnecting the connection cables by creating a metallic contact between your tools and the two poles. Disconnect the cables as follows:
1 Turn the main switches off.
2 Remove the minus cable (black).
3 Remove the plus cable (red).
4 Loosen the lashing gear.
Proceed in reverse order to install the new battery.

3.6.3 Main switches

The main switches in the **COMPROMIS 34 Class** are located near the stairs. The starboard switch activates the starter battery of the engine. The portside one activates the rest of the installation.
Turning the switch on: Press the switch and turn it a quarter of a turn in clockwise direction to arrest the key.
Turning the switch off: Turn it a quarter of a turn in anti-clockwise direction; now the key may be removed.

While sailing, <u>always</u> activate both switches. When leaving the boat (to go on shore), turn both switches off. Also make sure that the VHF-radiotelephone is totally switched off, since it may otherwise use up the starter battery.

3.6.4 The fuses

The on-board mains supply is equipped with automatic fuses that act as overload circuit-breakers. If nothing happens after activating a given group, the following overview will help you to detect the cause of malfunction.

- Turn off all loads in the group.
- Turn on the group (by using the switch):
If the automatic device immediately shows a malfunction, this points to a short-circuit in the group. In this case please consult an expert.
If it persists, activate the loads one by one to locate the defect.
If the automatic device only shows a malfunction when the last load is activated, reset it and repeat the procedure in reverse order. If the automatic device once more shows a malfunction when the last load is activated, this points to an overload. Otherwise the last load is short-circuited.
In the engine compartment space (near the batteries) there is a fuse holder for the electrical equipment to be connected directly to the battery. The following table shows the corresponding fuse values of the individual loads. If the new replacement fuse is blown once more, the equipment must be immediately inspected by an official agency.
Never replace a defect fuse by a new one with a higher value. Never use screwdrivers or other metal objects to remove a fuse (short-circuits!). Before replacing a fuse, first turn off the power by pressing the main switches.

Fuse holder charger compartment (plug-in fuses)		
Position	**Load**	**Ampère [A]**
1	VHF-radiotelephone	15
2	Operating hour counter*	5
3	Radio continuous supply*	5
4	WCD-12 V steering column*	10
5	Voltmeter starter battery*	5

The electrical circuit for the loads is protected by a main fuse (connected directly after the battery) which is located in the charger compartment. This is a cutter fuse of 125 A.

If your boat is equipped with a diesel heating, you will find a plug-in fuse holder behind the instrument panel.

3.6.5 Lighting

The lighting is divided into four different groups:

a)	LIGHTING	Main saloon
b)	LIGHTING	Galley,
c)	LIGHTING	Engine compartment, shower, sail locker
d)	LIGHTING	Forecabin, aft cabin
e)	INSTRUMENT LIGHTING	Instrument panel, console and compass
f)	NAVIGATION INSTRUMENTS	Instruments in console
g)	THREE-COLOR BEACON LIGHT	
h)	ANCHOR LIGHT	
i)	NAVIGATION LIGHTING	Steaming light, stern light and two-color beacon light

3.6.5.1 Interior lighting

The lamps are protected well to prevent human contact and damage.
The halogen light is the only one to communicate with the ambient air to provide a sufficient cooling effect.

ATTENTION: While burning, halogen lamps heat up considerably which necessitates caution, particularly in the presence of children on board.

3.6.5.2 Navigation lights

The required navigation lights depend on the area.
When SAILING in the dark, you need a THREE-COLOR BEACON LIGHT.
While MOTORING, you will have to have a TWO-COLOR BEACON LIGHT as well as a STEAM and STERN LIGHT.
While anchoring or mooring, you need an anchor light.
The legal stipulations regarding the lighting must be observed at all times.

3.6.5.3 Replacing the lamps

Defect lamps are easy to replace. The following tables contain corresponding instructions and also list the respective light intensity.

Attention: Any lamp (especially halogen lamps) may be hot. Make sure to let them cool down first.

TYPE OF LIGHTING	CHANGING THE LAMP
Halogen lamp (revolving spotlight)	Directly accessible. **Attention: Never touch the lamp with your hands / fingers!** Use a clean tissue / kitchen towel to avoid all contact.
Halogen lamp (fixed spotlight in the ceiling)	1) Turn the cap to the left until you hit the stop and then remove it (bayonet connector). **Attention: Never touch the lamp with hour hands / fingers!** Use a clean tissue / kitchen towel to avoid all contact.
Navigation lighting	1) Press the safety button unterneath the cap. 2) Simultaneously tilt the cap upward.
Ceiling lighting (round)	1) Press the cap and then turn it to the left until you hit the stop. 2) Press it further and turn to the left. This will release the cap, so that the fluorescent lamp is easily accessible.
Ceiling lighting (square)	1) Place a screwdriver between the cap and the base at the opening in the cap. 2) Loosen the cap.
Neon lamps	1) Hold both ends of the cap. 2) Press them and carefully pull the cap to remove it.

LIGHTING	TYPE OF LAMP	POWER
2-color beacon light	Bayonet connector (2-point)	12V/25W
3-color beacon light	Bayonet connector (2-point)	12V/25W
Halogen spotlight	Halogen	12V/10W
Cabinet lamps	Halogen	12V/ 5W
Stern light	Bayonet connector (2-point)	12V/10W
Map reading lamp	Halogen	12V/ 5W
Ceiling light (square)	Fluorescent lamp	12V/15W
Ceiling light (round)	Fluorescent lamp	12V/15W
Fluorescent light	Tube	12V/ 8W
Top light	Bayonet connector (2-point)	12V/10W
Steaming light	Bayonet connector (2-point)	12V/25W

3.7 The electrical system (220 V)

3.7.1 General

Considerable effort and care went into the installation to make it safe. Since inexpert modifications may create hazardous situations, it is important to comply with the following instructions:

- Never work on the installation as long as it is in use.
- Never modify the electrical installation and the pertinent drawings in any way, unless this is done by a qualified electrical technician (for boats).
- Never change the nominal current of the overload protection.
- Never install any equipment, instruments or parts with a higher power value than the one listed on the on-board mains supply.
- Only use double insulated or three-wire instruments (with an earth connection).
- Use an earth wire (yellow/green) to earth the metal housings of the electrical instruments installed on board.

Technical specifications:

- Combined automatic fuse / earth leakage circuit breaker, maximum load 16 A, maximum leakage current 30 mA. The automatic fuse / earth leakage circuit breaker is located in the sail locker / wet cell.
- Main switch (with control lamp).
- Non-polarized on-board mains supply.
- The AC conductors are surrounded by a gray sheathing and are routed in their own cable duct, separated from the DC conductors (12V).

3.7.2 Use

How to connect the on-board mains cable to the shore.

- Check the main switch (instrument panel); it should be turned "off".
- First connect the shore cable to the boat.
- Then connect the shore cable to the on-shore plug.
- Now turn on the main switch (ON). The red control lamp will light up.

How to disconnect the on-board mains cable.

- Turn off the main switch (OFF).
- Disconnect the cable from the on-shore plug.
- Then disconnect the cable from the plug on the boat.

Caution: Never let the end of the shore cable hang into the water. This may give off electricity into the water, thus injuring or even killing swimmers in the vicinity.

The maximum load of the installation is 16 A. In the case of an overload, short-circuits or leakage current, the earth leakage circuit breaker will automatically shut off the on-board

mains supply. First try and find the cause of the malfunction before once more activating the installation. Power will return by turning the switch on the automatic earth leakage device.

Shock and fire risk
Always make sure to turn off the switch of the shore connection before plugging in or unplugging the shore cable.

Caution: First connect the shore cable with the plug on board the boat and then connect it to the on-shore power source. When discharging, proceed in reverse order. Carefully close the lid of the on-shore power supply.
The on-shore power connections may never the modified; use only appropriate, fitting cables.

3.7.3 Maintenance

Regularly check the on-shore cable and the plug connections for possible damage. If these cables are damaged, replace them immediately to keep on the safe side.
Regularly check the funktion of the earth leakage circuit breaker (at least twice a year):
- Connect the installation as described in the paragraph about "use".
- Now press the yellow button on the earth leakage circuit breaker.
- The black toggle switch should now switch off down.

3.8 The cooler

The cooler is built into the work top. The box is a standard cooling unit; the compressor is installed underneath.

3.8.1 Use

The temperature control device operates automatically. The temperature adjusting button is located inside the cooler.
Make sure never to close the inlet and outlet openings for the cooling air to prevent overheating; in addition, this will dramatically increase power consumption. For details please see the manufacturer's documentation.

3.8.2 Maintenance

The cooler should be cleaned regularly; it needs no additional maintenance. Use no aggressive or scraping cleaning agents.
For further details regarding the maintenance of the installation please see the supplier's documentation.

3.9 The bilge pump

The COMPROMIS is normally equipped with a manual bilge pump. This bilge pump is attached to the inside of the cockpit seat. The lever is located in the locker. It fits to the cockpit side of the pump. Move it up and down to drain the bilge. The pump has a capacity

of approximately 1 liter per stroke. The suction side is connected to a strainer / filter placed on the bottom of the bilge. This is accessible via the hatches in the floor of the main saloon.

In addition there is an electrical bilge pump, constructed without a float-operated switch.This pump is activated by pressing the corresponding switch on the instrument panel.

ATTENTION: Never ever use the bilge pump to remove oil leakages since this will severely contaminate the water. There are special devices available to remove spilled oil!

3.9.1 Maintenance

The bilge pump does not require any special maintenance. Make sure to use the pump several times per year to verify its function. This is to prevent the membrane from drying out; it also shows you that the pump is working well. If any water entered your boat, remember that a small amount of water may remain behind the longitudinal floor plates.

3.10 The steering gear

Your COMPROMIS is equipped with a Whitlock steering gear. This is a quality system which guarantees safe and pleasurable sailing for many years. In case of a malfunction you always have your emergency tiller.

3.10.1 The emergency tiller

You will find the emergency tiller in the cockpit locker on the after deck. Loosen the lid above the rudder shaft (possibly with the winch lever). You can easily push the emergency tiller onto the end of the shaft.
This construction allows you to keep going. Try and assemble the emergency tiller in advance, in all peace and quiet, to make sure that you know how it works.

3.10.2 Maintenance of the steering gear

The steering gear cables must be under a certain tension to make sure that none of the cables breaks loose under load. If this happens, tighten both downhauls to the same extent (underneath the cover board under the mattress of the bed in the aft cabin). Do not forget to thoroughly fasten the lock nuts. The tension, on the other hand, should not be too high, either, since this would increase the resistance and cause serious abrasive wear.

In case of doubt, ask an expert to check the installation!

3.11 The heating system*

The Compromis 34 Class may be equipped with various different heating systems in good condition to guarantee a comfortable interior temperature.

3.11.1.1 The Diesel heating system

The heating unit is located in the sail locker.

Never close off the discharge opening of the exhaust gases (deck).
Attention: The protective shell of the exhaust may be hot!
The combustion air needed by the heater is drawn from the sail locker space. The air can ventilate along the edges of the sail locker hatch. It is therefore important never to seal this opening with a draught strip etc.

Attention: As soon as the room has reached the desired temperature, the heater will initiate its after-cooling cycle. Never attempt to interrupt this cycle to prevent damaging or contaminating the heating element. For the same reason, always make sure that the heater has completely stopped before turning off the main switch (lightings)!

3.11.1.2 The gas heating system

The heating unit is located in the sail locker.
Never seal off the discharge opening of the exhaust gases (deck) so as not to interrupt the supply of combustion air.

3.12 The water supply

The water tank in the COMPROMIS 34 Class is located underneath the bed in the aft cabin. This tank is equipped with an inspection hatch. If necessary, this hatch may be used to clean the inside of the tank. A carbon filter is installed underneath the work top, under the sink. The **COMPROMIS** 34 Class is equipped with an electrical water pressure system with an additional emergency foot pump near the galley block.

3.12.1 Use

Fill up the tank sufficiently to carry enough water for the immediate passage. Then activate the pump by operating the switch on the instrument panel. The pump will build up the required pressure and then stop automatically. You can not tap off water by simply opening the faucet. Attention: Inexperienced persons will often use far too much water.

Tip
Drinking water does not keep forever. Do not fill the tank overly much; make sure merely to carry enough water for the immediate passage. Drain the system if you expect not to use the boat for extended periods of time.

If you find that the pump turns itself on briefly now and again despite the fact that you used no water, see whether:
- one of the faucets was left slightly open.
- the tank is empty.
- the faucet of the foot pump in the sink cupboard is not quite closed.
- the filter or the pump is soiled.
- the systeme leaks.

Find the cause and alleviate the problem.

In case of a power failure or to save electricity on long passages, you can always use the foot pump when busy at the galley work top. In this case, however, make sure to first open the shut-off valve in the sink cupboard.
Always turn off the electrical water pump!

3.12.2 Maintenance

When you first go on board after an extended absence, start by flushing the system with several liters of water. Discard this water. The pump and the connection pieces may give off substances that affect the taste of the water.

Water pump / coarse filter
Make sure to regularly clean the filter attached to the water pump. However, first turn off the electrical water pump!
Prevent freezing by draining the entire system before winter. It may be useful to disconnect the tubing from the pump. In the spring, flush the tank with a special agent or with plenty of vinegar (approx. 2 liters).

The carbon filter
The carbon filter must be replaced **prior to** the start of the season. Open the two hose clips, pull the filter tube out of the two holders and pull the tubes off the tube clamps. Then install the new filter element (available at a yacht shipyard or at a good ships' chandlers) by repeating the procedure in reverse order.

The foot pump
Each year, before starting the season, test the foot pump to prevent the pump mechanism from getting stuck. For details please see the instructions in the paragraph on "use".

The pressure vessel
The pressure vessel must be set to the activating pressure of the used water pump. For a standard water pump this is 1.7 bar (in the case of a pressure-free water system); this value is preset by the shipyard and does not normally need to be checked. If the water pump, however, starts coughing if you tap off a little water (quickly turning the faucet on and off), the membrane in the pressure vessel may be broken, or the pressure is too high / too low. The pressure vessel is equipped with a valve which allows you to regulate and adapt the pressure using a regular tire gauge and pressurized air.

3.13 The hot water supply*

* Option: Your boat is equipped with a boiler, which is located underneath the bed in the aft cabin. A corresponding diagram is found in the appendix. Please read the manufacturer's documentation carefully; instructions are as follows.

There are two techniques to heat the water supply in the boiler (60 l):
1 While motoring, the water is automatically heated by a heat exchanger.
2 While mooring in the marina, the system makes use of the built-in 220 V heating element which may be activated by using the switch above the instrument panel. When this is activated, the red signal lamp will light up.

The system pressure is provided by the pump that also supplies your drinking water.
Make sure that the boiler is completely filled when you heat it. You can check this by widely opening one of the faucets (warm). As soon as there is only water - no air - coming out of the tap, you may safely assume that the boiler is completely filled with water.
Activating an empty boiler by using the on-shore connection cable may damage the electrical heating element. If this happens, the built-in overheating protection will prevent greater damage. You can easily reset the boiler afterwards (for details please see the enclosed supplier's documentation).

3.13.1 Maintenance

After an extended absence, flush the pump with several liters of water and discard this water. The pump and the connection pieces may give off substances that affect the taste of the water.
Protect the system from freezing and drain it thoroughly before winter. Regularly check the function of the pressure relief valve. When taking the boat out of winter storage, check the entire system (tubing and couplings) for leakages.

3.14 The shower pump*

1 Turn on the shower lighting on the instrument panel.
2 Open the shut-off valve
3 Use the push button on the shower unit to activate the pump.

Turn off the pump as soon as the shower basin is drained. Running the pump too long will cause damage.
Regularly clean the strainer basket on the pump's suction tube. The pump capacity may deteriorate due to soiling.

3.15 The toilet

3.15.1 How to use the toilet

The toilet should be used only out on sea. On standing and shallow waters and especially in a marina, the use of toilets discharging into the water is prohibited. If you disobey these rules, the quality of the surface water in the marina will rapidly deteriorate.
At the rear of the pump there is a valve that allows you to pump with or without flushing water (see the sticker on the pump).

Before use:
1) Open the shut-off valves: supply of flushing water and discharge opening for waste water.
2) Flush with some water (to facilitate cleaning).

After use:
3) Turn the valve to "flushing" and pump off the waste water.
4) As soon as the sewage has vanished, operate the pump for another six strokes.
5) Close the vale and pump until the pot is drained.
6) Close the shut-off valves.

Never throw solvents, oil, paper tissues, sanitary napkins, etc. into the toilet to prevent stoppage or damage. Certainly refrain from using toilet cleaner or bleaching agents for an underwater toilet because this may damage the gaskets as well as the aqueous ecological system.

3.15.2 Maintenance of the toilet

The toilet should preferably be lubricated now and then, especially if out of use for a certain period of time. To this end, fill the pot half with luke-warm water and add some vegetable oil. Now slowly pump off the liquid. The pump rod should be regularly greased with silicone grease.
Make sure that the toilet is completely drained before the winter to prevent the pump and the pot from freezing. When taking the boat out of winter storage, inspect the toilet for leakage, abrasive wear and function. It should be easy to operate. Special repair sets for the gaskets are commercially available.

3.16 The waste water system

Your Compromis is normally equipped with a built-in sewage system consisting of maintenance-free HDPE with a volume of 60 liters.

The sewage tank (8) is located in the wet cell.
This installation offers two possibilities.

A Sewage discharge into the outside water
1) Set the selector valve (3) to "sea".
2) Now follow the procedure for toilet use, starting with step 1.

B Sewage discharge into the slop tank
1) Set the selector valve (3) on "slop tank" and open the flushing water supply .
2) Now follow the procedure for toilet use, starting with step 2.

The tank should be emptied if it is to be left for an extended period of time to avoid stoppage. There are two ways to drain the tank. You can either open the tap directly underneath the tank, or you can use an on-shore suction device. Make sure that you are allowed to discharge the content of the tank in the first place!

Caution: Never fill up the tank all the way to the top ! When using the toilet pump, you can build up enough pressure to press out the waste water through the bleed pipe, thus contaminating the odor filter which would then have to be immediately replaced.

C From the tank into the surrounding water
1) Open the seacock (10)
2) The tank will drain off by itself. You may accelerate this process by opening the seacock while motoring.

D From the tank by using an on-shore suction device
1) Set the selector valve to "sea".
2) Open the tank cap on deck (5).
3) Connect the on-shore device and pump until the tank is drained.

If the installation is to remain out of use for a certain period of time after performing steps C and D, make sure to flush the system with a sufficient amount of water. Discharge the flushing water.

3.16.1 Maintenance of the waste water system

Prevent fouling of the tank by regularly flushing the entire system with water. Before laying up for the winter, drain off all water as thoroughly as possible. Check the tubing and the couplings for abrasive wear and leakage.
When preparing for the season, replace the carbon element of the odor filter. If the system is frequently used, it may be necessary to replace the filter more often.

The level indicator (swimmer) is protected by a basket which prevents too much soiling. Nevertheless, this basket should be flushed regularly using the inspection lid or by connecting a water tube to the clamp above the level indicator.

3.17 The discharge system

The engine exhaust gases are discharged via a tubing system that exits near the waterline. For the corresponding diagram please see the appendix. The discharge opening tube is equipped with a water lock which, together with the loop in the tube, prevents a siphoning effect. A vent stack is used to air the water lock.

3.17.1 Maintenance

Each year the tubing and the couplings should be checked for abrasive wear and leakage, preferably during the winter period.
Leakages may allow hazardous gases to penetrate into the interior of the boat.

3.18 The winches

Your Compromis is equipped with Anderson winches (halyard, sheet and anchor winch). These are high-quality stainless steel winches. Avoid damaging the winches by turning the lines three times around the drum before pulling them through the selftailer.

3.18.1 Manual winches

Your boat is normally equipped with manual winches

3.18.2 The electrical sheet and halyard winches*

For details please see the manufacturer's documentation.

3.18.3 The manual anchor winch *

The anchor winch may be operated by closing the anchor hatch and pushing the long winch lever through the opening.

3.18.4 The electrical anchor winch *

On demand we are glad to build in an electrical anchor winch for you. The installation is equipped with two activation protection devices - an overload switch installed behind the

instument panel. This switch is used to shut off the power supply to the engine; it is not used during normal operation.
The remote control may be activated by setting the switch on the instrument panel to "1". Now the winch is ready for use. As long as the setting is "0", the winch cannot be operated. While anchoring, remember to relieve the winch by hooking up the chain behind the chain stopper.

4 The propulsion mechanism

This chapter discusses the most important aspects in conjunction with sailing and motoring.

4.1 Sails and rigging

4.1.1 Raising and striking the mast

Place the mast on a couple of supports with the front facing up. Take care not to damage the rail.
Now assemble the weather flag, the navigation lamps and possibly the transmitter of the windmeter and the antennae. Lubricate the poles of the plugs with pole grease. Check whether the lighting and, if present, the windmeter and the antennae are functioning well.

Fasten all stays and halyards.
Make sure that all downhauls are screwed tight by at least 8 turns; the upper and the lower ones should be tightened equally fast. Now attach the crosstree caps to the main shrouds, approx. 30 mm above the crosstree holders; fasten the screws well. Support the mast, keeping it free. Then fasten the crosstrees in the holders with the upper screws facing downward and secure the screws. Make sure that the forehalyard, the forestay and possibly also the spinnaker boom holder and the spinnaker halyard remain in front of the crosstrees.

Now attach the downhauls of the main shrouds and the backstay to the chainplates and put them down, facing abaft.
Now fasten the crane sling around the mast with a generous loop to allow it to move freely along the mast without catching on the halyards, stays or shrouds.

Caution: Carefully follow the crane operator's instructions. The precise procedure depends on the respective crane construction. Make sure that the downhauls can rise well and that none of the shrouds, halyards or lines is caught anywhere. A bent downhaul or a buckled stay should be replaced for safety reasons.

Fasten the mast pin and secure it with the spring washer. Make sure to raise the mast without allowing it to swing back and forth.
As soon as the mast is up, install the forestay (roller-reefing jib) to secure the mast in place. Turn the crane away. After fastening the forestay (roller-reefing jib), fix all stays: first the backstay, then the main shrouds, and finally the lower shrouds.

Attention: Make sure to evenly fasten the downhauls on the starboard and the port side !
The roller-reefing jib system has no downhaul.

If the downhauls were marked during the last season, the downhaul may be fastened definitively. Make sure that the mast is perfectly perpendicular and that the downhauls are carefully secured.
Trimming the mast has to wait because it can only be done while sailing; for details please see the following paragraph. Now plug in the connectors into the outlets and check everything once more to verify that all parts function well.
Now you can guide the halyards through the kickers to the halyard stopper.
To pull through the halyards, push the halyard stopper handles all the way forward. Then pull the handle back again. Now it is ready for use.

4.1.2 Trimming the mast

Most boats are not equipped with instruments to measure the tension of the stays and shrouds. Nevertheless, a rule of thumb may be used to assess the correct prestress for the shrouds and stays: maximally 10% of the displacement. The most practical method is to check and adjust the stays while on passage. First adjust the lower shrouds, then the forestay, then the backstay and finally the main shrouds. At a heeling angle between 20 and 25the lee-side shroud should always remain under a certain tension - it should never hang loose. Initially this needs regular checking.
While sailing with a reefed mainsail, make sure that the mast does not assume a concave shape; i. e., that it does not bend backward through the middle. This is why the mast, when not under any tension, should bend forward just a little. The curve should be approximately half of the mast thickness.

Caution: Make sure that the downhauls are always secured well when the mast is up. Vibrations caused by the wind or the engine may loosen the downhauls. Due to the considerable sideways loading that the stays are subjected to, the construction may be deformed or damaged. If the prestress, on the other hand, is too low, the rig may flex back and forth in heavy weather, which is always a risky situation.

If your yacht remains in the water during the winter, together with the sails, and if you do not sail during this period, it is recommended to reduce the prestress during this period.

For details please see the mast manufacturer's documentation (Seldén).

4.1.3 Reefing down

Reefing down is useful to reduce the surface of the sails as the wind picks up speed. Reefing down (taking in the sails) reduces the force acting on the rig and lowers the center of effort (the point where the wind force acts on the sails). This, in turn, reduces the heeling torque; the boat will stay more upright, feel more controllable and make less leeway without losing much of its speed. When sailing close to the wind, you will feel the force of the sea and the wind much more intensely and you will therefore have to take in the sails earlier.
Especially if the (family) crew is small, make sure to take in the sails in good time to avoid the worst; it is much easier to prepare while mooring in the marina or on quite anchorage than ending up ill-prepared on a lee shore or in open water. When sailing before the wind or starting out on the windward side, you will realize much later that the wind has increased in

force and the waves are higher. Regularly train how to take in the sails in quiet conditions, so that the entire crew knows what to do.

Taking in the mainsail.

Just as when setting and striking the sails, you may prefer to be close to the wind when reefing down. Sailing on the jib, luff up until you are very close to the wind, ease the mainsail until it stalls and then tighten the furling line until the boom is clearly suspended on its traveller. Then rapidly pay out the mainsail halyard to bring the reef pennant to the jib pivot (2 m) and forcefully tighten the reef line; for the final effort use the halyard winch. Once the lower leech of the reef is well tightened, the mainsail halyard may be tightened once more.

Even if the wind is so strong that you need to double-reef right away, begin with the first reef anyway. If you start out with the double reef, remember that you will have to take out the entire reef again as soon as the wind abates and once more set the first reef - something that is better done beforehand. Attention: After reefing down, the furling line may be eased off. When taking out the reef, tighten the furling line, steer close to the wind and ease off the mainsail, slacking off the mainsail halyard before easing off the reef line and once more tightening the mainsail halyard.
A bowline knot is used to attach the first reef line to the boom. The line runs through the first reef pennant in the after leech and then proceeds via a disk in the boom through the block halfway along the boom. It then travels on through the block at the boom poles to reach the ship underneath the jib pivot and ends up in the cockpit.

A second line is tied to the block halfway along the boom, then runs over a disk at the jib pivot to the ring sown into the sail. When taking in the sail for the first reef, move the block in the boom backward, so that the eye of the fore leech touches the boom. Once this block reaches the pole (i.e., when it cannot be moved any further), the line will pull the after leech onto the boom. In order to leave as little space as possible between the eye in the after leech and the line, you may wish to attach the line with an anchor knot instead of a bowline knot, which always has a loop.

Reefing down the roller-reefing genoa

For details please see the supplier's manual.

4.1.4 Motoring

This paragraph contains instructions concerning the use of the engine. For details regarding the engine and its operation, please see the chapter on "the engine and the engine compartment".

Make sure to maintain sufficient speed for maneuvers, especially when sailing with the wind on the beam.
While motoring, never let go of the steering wheel or the emergency tiller, especially not when reversing. The pressure differences caused by the screw propeller in the water make for unpredictable rudder reactions.

Never motor at excessive speed. At the right amount of throttle - somewhat more than half - your yacht gets to hull speed. You will gain nothing by speeding up more - you will merely create high bow (backwash) and sternwaves, throw a lot of spray around, increase the fuel consumption, cause unnecessary abrasive wear and rightly upset other sailors in the vicinity. The extra power is only meant for maneuvering, towing and motoring through high waves and is an effective way of making to windward in heavy weather.

Your yacht's diesel engine is highly reliable. If used incorrectly or if neglected, however, it may fail at a crucial moment. If you use your engine very rarely, it becomes even more important to treat it carefully and to ensure good maintenance.

There is a saying among sailors: If you love sailing, love your engine.

4.1.5 Flooding

While on passage, make sure that the deck hatches are closed to keep water from entering the ship. Once the waves are high enough to flood the cockpit, it may be preferable to close the companionway, too. Always keep the water self-drain openings in the cockpit clean.

4.1.6 Lifelines and life preservers

Attach the lifelines to the respective terminals; such as the cleats, and - if applicable - mount special lifeline eyes onto the cockpit floor or along the superstructure on the deck.
Your Compromis is normally equipped with one lifebuoy suspended on the aft railings. If needed, a life-raft may be attached here, too. When in use, cleat the lines.
To facilitate boarding from the water, your Compromis is equipped with a little ladder.

4.1.7 Towing

If you tow a boat or if you need to be towed yourself, comply with the following instructions.

Cleat the towing cable as shown in the following figure. Use a branch attachment to distribute the forces.

A Towing another boat
B Being towed yourself

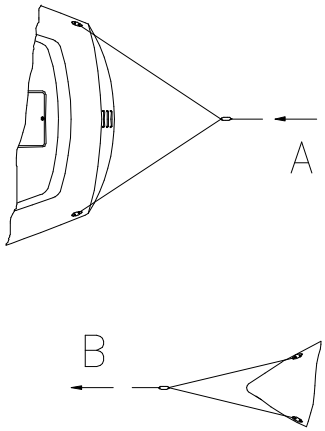

Attention: Make sure that the lines are routed carefully to prevent them from touching the toes of the aft railings or the after end (leaving the coamings clear).

Find a sturdy attachment on the other boat. Do not necessarily assume that the cleats on the other boat are as solidly mounted as on your own Compromis; avoid damage.
Make sure that the towing cable is kept away from the screw propeller.
Use a floating line!

5 Maintenance of your yacht

The **COMPROMIS** was designed and the materials were selected to minimize maintenance in the long run. The chapters describing the individual systems contain detailed instructions regarding the maintenance. Consult the pertinent paragraphs if needed. This chapter discusses the remaining maintenance aspects to keep your boat in optimum condition.

5.1 Antifouling paint

Standard
The antifouling paint used normally on your **COMPROMIS** is an anti-fouling product on chlorine-rubber basis with fresh water quality. You need not worry as long as the layer remains intact over the entire surface of the hull. On the average, a new layer is needed once or twice a year. If your boat spends the winter on shore, do apply a new layer to prevent oxidation. Thoroughly spray-clean the underwater ship, sand the antifouling paint and then apply a new layer.

Special
Depending on your specific sailing area and your personal preferences, your boat may be equipped with:
- salt water quality antifouling
- antifouling on teflon basis

Antifouling paints on teflon basis must be washed with fresh water once a year and then covered with two or three new anti-fouling layers.

Caution: Stricly comply with the instructions on the package. Antifouling is an ecological fiend and a health hazard. Never use more than strictly necessary and carefully dispose of the remnants.

5.2 Instruments

Protect the compass with a cap or a cover to prevent discoloration of the rose.
For details regarding the other instruments please see the enclosed manufacturer's instructions.

5.3 Pillows and curtains

The pillows and curtain materials used inside your Compromis are all high quality, the same as you will find in good quality interior design shops. The pillows are equipped with removable pillowcases. To remove these pillowcases, first undo the buttons. The pillowcases should preferably be taken to the chemical cleaner's.
The curtains may be washed.

5.4 Winches

The winches are normally almost maintenance-free. Only if your COMPROMIS is used extensively for off-shore sailing, it is recommended to take the winches apart at least once during the season and to apply water-resistant ball-bearing grease. First rinse the bearings with fresh water; if necessary, use a soft brush.

5.5 Rigging and sails

The rigging - except for the downhauls - requires no maintenance at all. The downhauls should preferably be cleaned once a year, using special downhaul grease.

The sails are merely washed if really necessary. If you clean the sails, use a special cleaning agent for sails. If in doubt about the condition of the sails, consult a sailmaker when the season is over.

5.6 Dodgers and sprayhoods

To care for your dodgers, sprayhoods and after tent and to keep them in good condition, always make sure to keep them clean. Once every two weeks, wipe off the outside and the inside with water containing a non-aggressive (mild) detergent.

The clamps of the tie rods should be slightly oiled several times per year.

5.7 Windows, portholes and escape hatches

Although aluminum requires very little maintenance, the hatches should be cleaned regularly to maintain the boat's attractive appearance.
The windows, portholes, the permanently-installed awning and the escape hatches may be cleaned with water (possibly containing a synthetic detergent). Use plenty of water to prevent scratching the surface with sand; and flush well.

Attention: Never use:

* alkaline agents, such as soda products
* acidic products, such as hydrochloric acid or phosphorous products
* steel wool, sandpaper or abrasives.
* cleaning agents designed for windows; these may contain alkaline agents that attack the surface.

For further details please see the manufacturer's documentation.

5.8 Anti-slip

The gray studded mat (Poly-grip) does not require any special maintenance. It should preferably be cleaned with fresh water and a hard brush. Persistent dirt may be removed with a gentle soap. Never use any bleaching agent, synthetic detergents, or cleaning agents.

The white antislip (all-grip) is easily cleaned with a hard brush. Quicker and better results are obtained by first soaking the dirt.

You can facilitate the cleaning effort by covering the anti-slip repeatedly in high-quality boat wax. Best apply the wax with a sponge and then polish it with a soft piece of carpeting or suchlike. Apply the wax at intervals of several hours.

5.9 Polyester

Polyester retains its best appearance if you treat the boat regularly with a good-quality boat wax - preferably once when preparing for the season and once more at the end of the season. This keeps dirt from sticking to the boat and facilitates cleaning.

The blue line on deck may bleach with time (become pale), a development that may be delayed by regularly applying boat wax. The discoloration affects only the outer layer (one micron) of the gelcoat. The original shade will reappear if you treat the line with a mild polyester cleaner and then wax it again.

The fenders should be cleaned regularly to prevent damage to the hull.

6 Laying up for the winter

6.1 Preparation

Carefully observe the instructions in the paragraphs about maintenance. For details also see the manufacturer's documentation.

The following checklist contains important advice on how to prepare your **COMPROMIS** for winter storage.
The aspects mentioned in this context are merely meant as guidelines. It is impossible to discuss all possible aspects because conditions may vary considerably.

Preparations for winter storage.

- thoroughly clean the outside of the boat with water and mild soap.
- thoroughly wax the deck and the hull as far as possible.
- clean the teakwood (outside); if necessary, treat it with teak oil.
- drain off the water tank, the pumps and the system.
- drain off the toilet and the engine.
- half open all shut-off valves.
- completely fill the diesel fuel tank.
- prepare the engine for the winter.
- remove all batteries, gas bottles, matrasses, curtains, loose equipment and - if possible - the instruments from the boat.
- open all doors, valves and hatches inside the boat.
- place one or two hygroscopic cells in the boat.

Checklist for winter storage

- Rigging: Watch particularly for downhauls, loose strands in the wire ropes, terminals, abrasive wear of halyards and eyes.
- Sails: Watch particularly for seams at the batten pockets and around the eyes; the battens should not saw through the sailcloth.

Once the boat is on shore.

- check the anode of the saildrive (see the Yanmar manual). **Be careful to prevent wax, silicone or teflon spray etc. to contact the anode because this will affect its function and attack other parts as well!** If you detect more extensive damage, contact the shipyard.
- check the screw propeller, the rudder and keel for possible damage.
- check the shut-off valves to see whether they function easily.

Ask the respective company to help you with these procedures if needed. In the spring, water sports service companies tend to have long waiting lists.

6.2 Hoisting

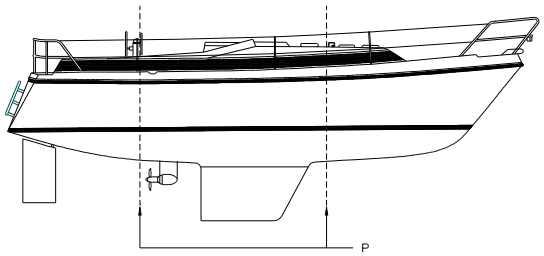

Use wide hoisting belts to hoist your boat out of the water. Check whether the belts are clean and make sure that they are undamaged. Any dirt caught between the belt and the boat may scratch the gelcoat layer. Corresponding stickers on the hull show you where the belts should be applied to keep the boat's balance while hoisting. In this drawing the pertinent locations are marked with a letter P.

Attention: Make absolutely sure that the rear hoisting belt is not caught behind the saildrive. If the belt ends up underneath the screw propeller before or while the boat is being lifted, it may cause considerable damage.

6.3 Storing the boat

Your yacht should preferably spend the winter on shore, provided that it is supported well and carefully and is put up stormproof. Make sure that the boat sits on a well-fitting trestle. The weight of the boat should rest on the keel, so that the support (of the trestle) is only there to prevent the boat from tipping over sideways. If this is done incorrectly, the supports may exert so much pressure on the hull that the skin is compressed after an extended period of time (the winter period). If your boat spends the winter on shore with a standing mast, be careful to protect it from strong wind.

If your COMPROMIS spends the winter in the water, there are a number of aspects to be watched for. It is very important to make sure that the yacht lies in a well-protected marina where the drifting ice cannot reach it. The risk is especially high in running water and tidal waters, but also on the lee shore of large open fresh water basins, such as the IJsselmeer. Ask your harbor master whether the marina is to be sealed off with timber in frosty weather.

In tidal waters, but also in large fresh water basins, the water level may vary considerably. In the latter case, the level depends on the winter / summer standard as well as the wind. Remove all loose parts, such as the little ladder. Secure all mooring ropes so that they cannot hang in the water and take in the lines.

Birds produce sharp, biting droppings that adversely affect the woodwork and the gelcoat. Leaves may obstruct the discharge openings of self-draining systems, gas locker or anchor locker. These problems may be alleviated by using a good-quality winter tent which is

available at the shipyard. Make sure to tighten it well, to fasten it well over the railings, along the stretcher and attach it to the handgrips on deck.
Any little pieces flapping or rattling will cause considerable damage during a forceful winter storm, allowing frost, snow, and thaw setting in to do their work on the boat.

Even if you cover your boat with a winter tarp, you may wish to wax the hull, the deck and the saloon before fastening the tarp and to treat the woodwork with teak oil or with another suitable product.

6.4 Preparing the boat for the season

After winter storage, check whether all hoses are still attached to the respective clamps and whether the hose clips are tightly in place. Also make sure that all procedures were carried out as agreed. After launching the boat, check thoroughly for leakages.
Make sure that the rigging is adjusted exactly as it was during the last season.
Clean out the water system and exchange the carbon filter for a new one.
Prepare the engine to put it in operational condition.
Prepare the gas system.
Clean the entire stainless steel fittings with a cleaner.
Return all loose equipment to your boat.

7 Additional information

7.1 Leakage at the companionway

If wind and rain fully hit the companionway, the resulting backwater may cause leakages.
If this happens, cover the companionway to be on the safe side.

7.2 Lightning protection

The main shrouds and the stays of the Compromis function as a conductor for lightning. The mast and the main shrouds are connected to the keel. If the boat is hit by lightning, the current will be passed on to reach the earth via the keel.

7.3 The galley work top

Never place hot objects on the galley work top so as not to damage the surface.

8 Warranty

All our products are delivered in accordance with the Hiswa sales and delivery conditions. These are supplied on demand.

The shipyard makes a sincere effort to build a sailing yacht that meets your expectations as best as possible. All of us working at this company are dedicated to our objective; which is to deliver a product that satisfies you and that we can be proud of. Nevertheless, please inform us immediately if there are any causes for complaint. We will do our best to remedy the matter in hand as soon as possible. Our policy is to constantly improve all our products. This is why we have to reserve the right to change certain details without necessarily informing our customers.

8.1 Delivery Reports

At delivery you will find several operation manuals and delivery reports. Please read the manufacturer's documentation carefully and fill out the delivery reports if necessary!

9 Declaration of conformity

The undersigned declares that the product listed on this declaration meets all requirements of the European Directive for Pleasure Boats 94/25/EC of June 16, 1994 and is therefore entitled to carry a CE mark. This product, due to the CE mark, is entitled to free transportation across borders throughout the EC; its import and export will not be impeded in any of the European member countries.

Date

Manufacturer Yachtshipyard Zaadnoordijk
Lagendijk 7
1911 MT UITGEEST
Tel: 00 31 (0)251-319008
Fax: 00 31 (0)251-312357

Description of the boat Compromis 34 Class
Construction number:
HIN code:

For a list of applicable standardized ISO/CEN norms please see Chapter 10.2 in the manual.

This declaration of conformity pertains to the following components of the boat:

1. hatches, portholes
2. steering wheel, steering mechanism, cabling
3. fuel tanks, hoses

Reference number
EC model designation
Application authority ECB
Julianaweg 224a
NL - 1131 NW VOLENDAM
Tel: 00 31 (0)299-323123

Signature Yachtshipyard Zaadnoordijk BV

M. Schuuring
Sales-Director

10 Final remarks

The operational safety of your yacht is a prerequisite for a safe passage. This is especially true of offshore sailing. There will be no emergency telephones on the way; you are entirely on your own. Sufficient knowledge and experience is needed, and the yacht's crew must be large enough. Half of the joy of ocean sailing is to be able trust in the reliability of the boat and the equipment and to know that you are independent of the rest of the world. Your **COMPROMIS** was built for operational safety, something we can only guarantee if you ensure good maintenance.

On long passages in particular, you may be aware of the weather conditions when you leave, but you will never know what awaits you when you arrive at the port of call. Even if the weather is fine on departure, make sure you have your storm sails on board!

Safety rests on minor details. SatNav, Decca, SSB radios and, if necessary, a radar may be practical in certain situations but become entirely useless once you panic, lose the mast overboard, or pull the halyards out of the mast due to inadequate maintenance. For small crews in particular it is important that everyone is enthusiastic about the passage, in good physical condition etc. Remember to regularly provide good-quality, warm food and drinks while on passage and to protect yourselves against seasickness and injuries, and to take other sensible precautions. When leaving for long passages, make sure that all of you are well rested and that your boat and your crew is trustworthy.

10.1 Availability checklist

An important aspect in conjunction with safety is a checklist to be run through before departure, as shown in the following example. However, you will certainly need to draw up your own personal checklist.
This list is not complete and is only meant as an example!

Installations:
- oil level engines back-up
- oil level Saildrive "
- fuel level "
- liquid level in the batteries
- condition of the switches
- spare parts / tools for the engine
- water pressure system
- heating system
- refrigerator
- gas supply and spare gas bottle

Lighting:
- are all lamps in functional condition
- are the navigation lights in place and well attached
- are there spare lights on board

Rigging and deck:
- tension of the shrouds okay
- seams of the sails intact
- are the sheets and reef lines correctly reeved
- check the halyards
- storm sails on board
- shackles / cotter pins well fixed

- sufficient spare ropes and fasteners
- is the anchor ready for use and is the anchor cable attached
- are the winch handles available and in good condition

Instruments:	- VHF-radiotelephone functional and antenna plugged in - depth sounder and log in good condition - no metal parts in the vicinity of the compass - compass and instrument lighting functional - the radio / SSB receiver functions well - binoculars (very important)
Safety Devices	- first-aid kit complete - tablets against seasickness - fire extinguishers in good condition - emergency fireworks - lifebuoys and dan buoy in place - correct life vests for all members of the crew - safety harness / safety lines for everyone - bilge pump ready for use - is the life raft - if present - ready for use - does everyone know where things are and how they work - is everything stored away safely
Maps and books	- recent maps covering the area in question, possibly with notations - maps showing the tidal streams and the tides - information about the lighting - almanaks and pilots for the same purpose
Food and drink:	- well-filled water tank plus emergency ration - sufficient food for the entire crew
Personal well-being	- Good, appropriate clothing for the crew (on long passages, remember that waterproof, warm clothing is more important than any navigational instrument whatsoever) - a second dry set of clothing - passports (on international passages)
Insurance:	- validity dates - sailing area - coverage - how to contact
Weather reports:	- before leaving, keep a prudent eye on the weather forecast: Listen to Radio 1. BBC 2. Scheveningen Radio or Radio Norddeich, Or by telephone: 06 - 911 22 352 (IJsselmeer and Waddensea); 06 - 991 22 353 (Delta area); while on passage: watch the barometric pressure and keep listening to the weather reports.

10.2 Standard sheets

Your ship was built in accordance with the CE standard, in compliance with the following norms.

ISO 7840
ISO 8099-1
ISO 8469
ISO 8665
ISO 8666
ISO 8846
ISO 8847
ISO 9093-1
ISO 9093-2
ISO 9094
ISO 10087
ISO 10088
ISO 10133
ISO 10134
ISO 10239
ISO 10240
ISO 11192
ISO 11447
ISO 11547
ISO 11812
ISO 12215-1
ISO 11215-2
ISO 11215-5
ISO 12216
ISO 12217-2
ISO 13297
ISO 14945
ISO 14946
ISO 15084
ISO 15085

10.3 Enclosed manufacturers' documentation

Cooler	WAECO
Windows	Gebo (Boomsma)
Escape hatches	Gebo (Boomsma)
Gas stove	Gautzsch-Gimeg
Engine	Yanmar
Mast / boom	Selden

11 Fire extinguishers

1 Fire extinguisher for the saloon
2 Fire extinguisher engine compartment*
3 Fire extinguisher aft cabin
* option

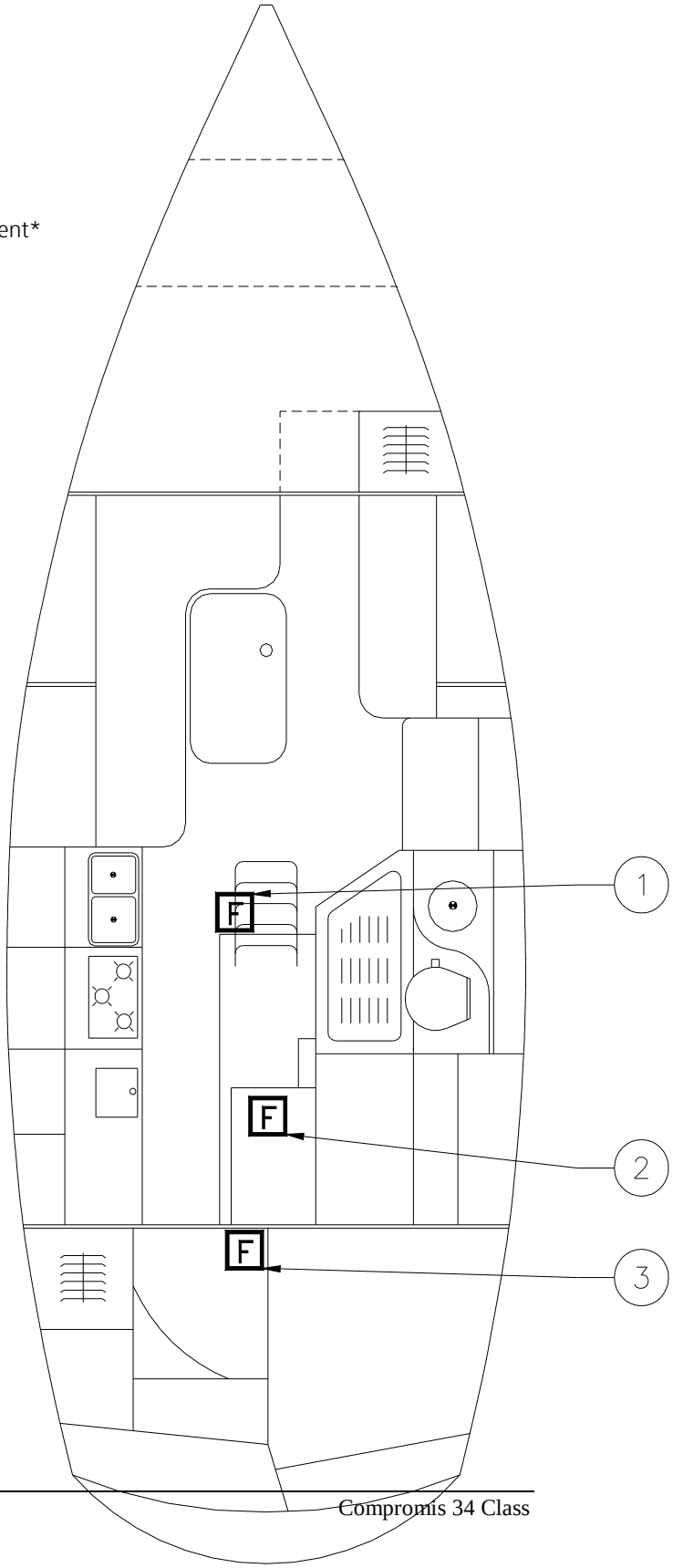

Position of the seacocks

1 Worktop drain pipe
2 Toilet flushing water supply
3 Sink drain pipe
4 Toilet drain pipe
5 Cooling water valve (Saildrive)
6 Self-draining cockpit system
7 Sewage drain pipe
8 Shower pump*
*=option

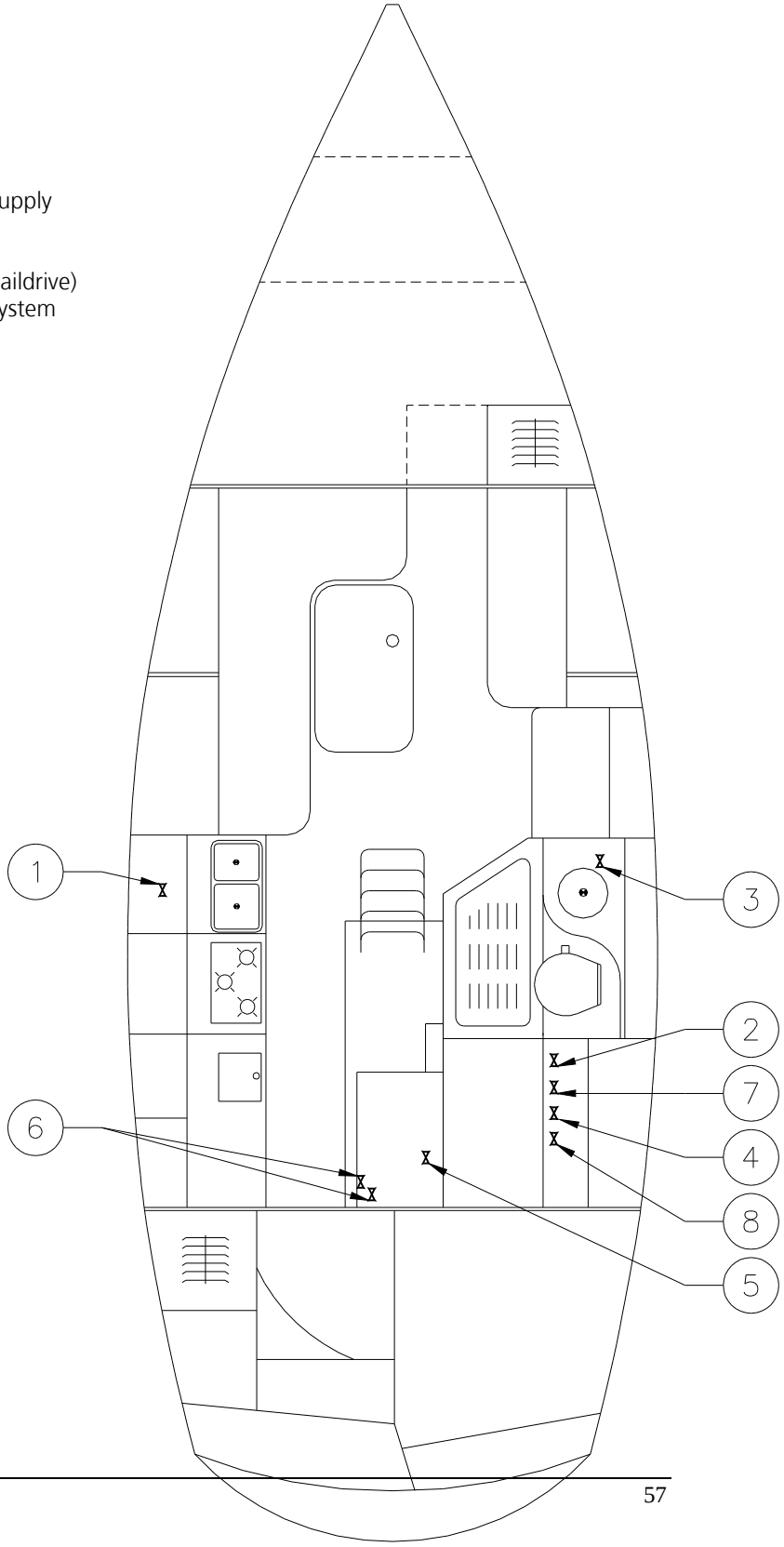

The fuel system

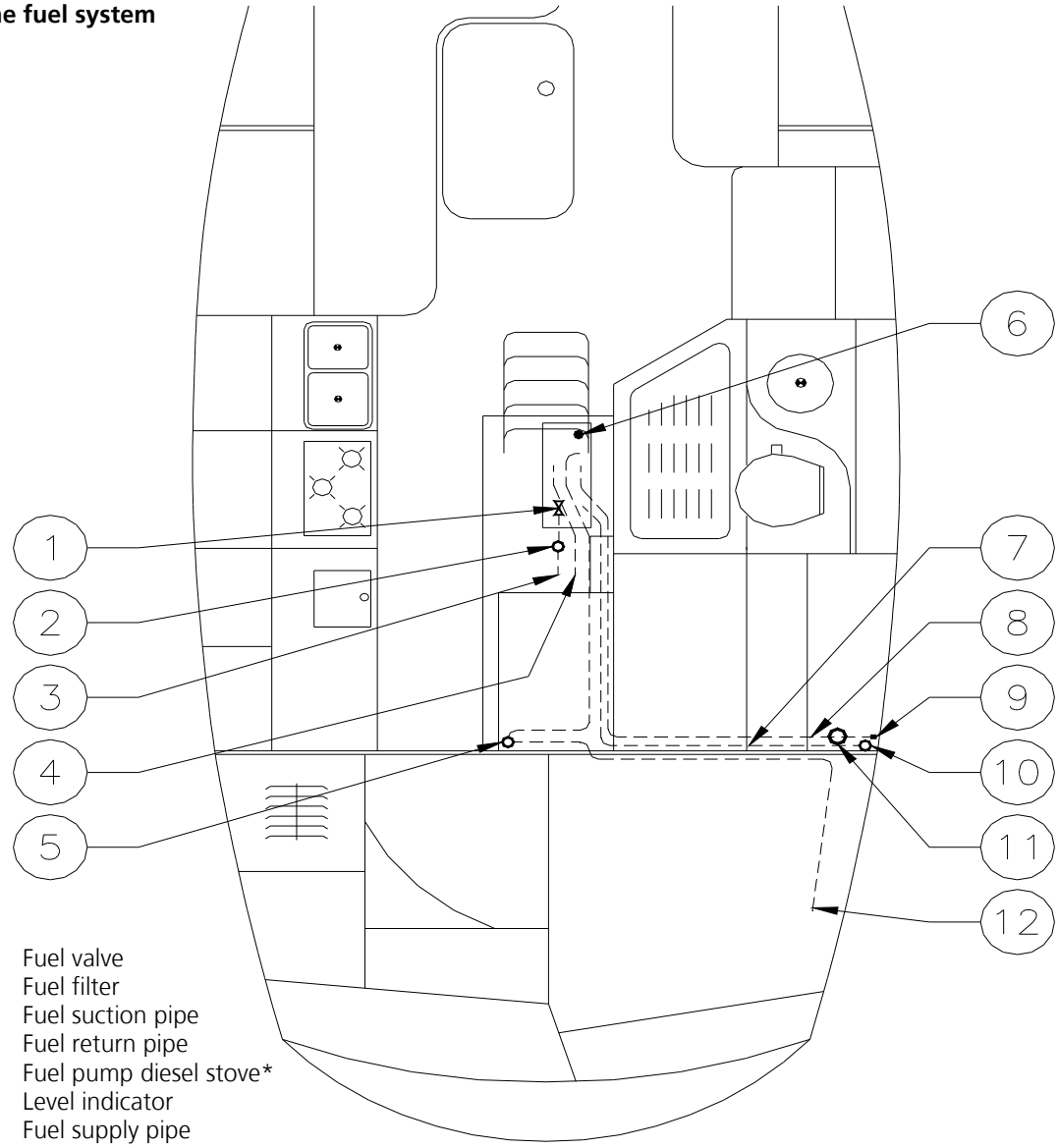

1 Fuel valve
2 Fuel filter
3 Fuel suction pipe
4 Fuel return pipe
5 Fuel pump diesel stove*
6 Level indicator
7 Fuel supply pipe
8 Ventilation pipe
9 Exit
10 Fuel fill cap
11 Overflow tank
12 Pressure pipe diesel stove*

* option

The gas sytem

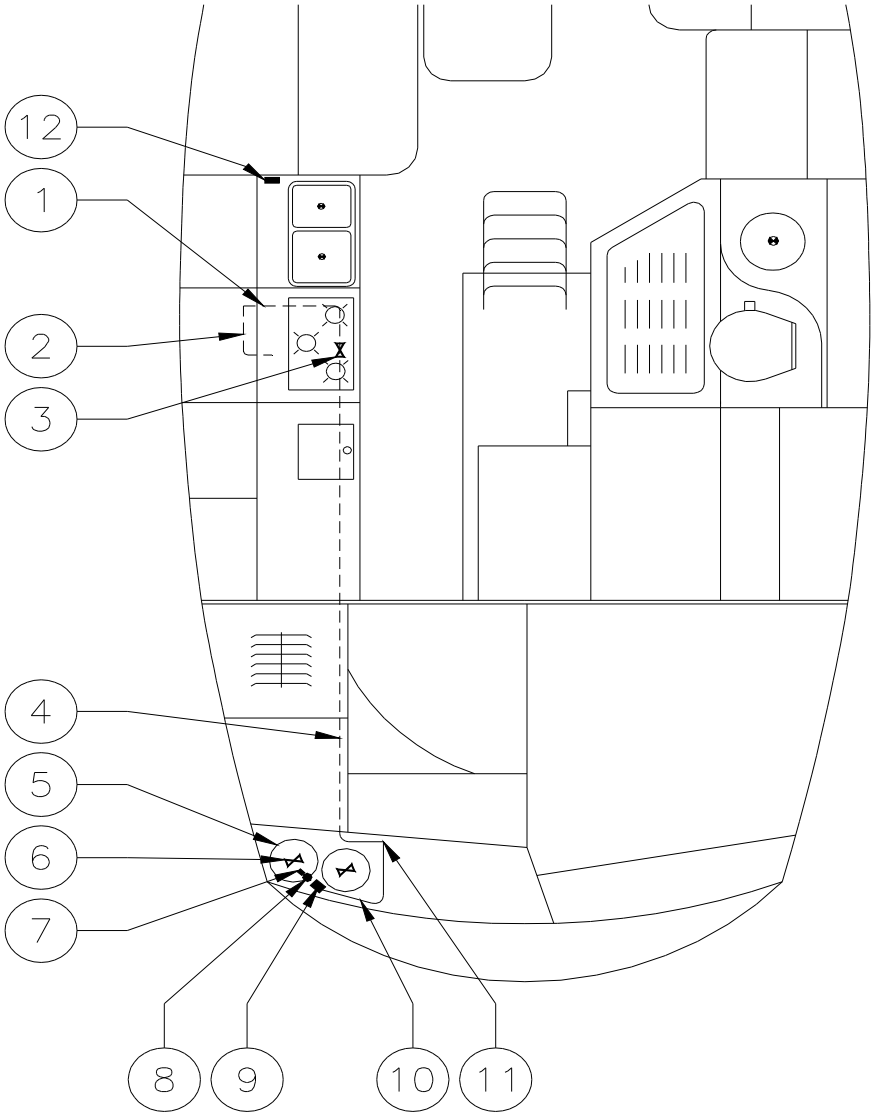

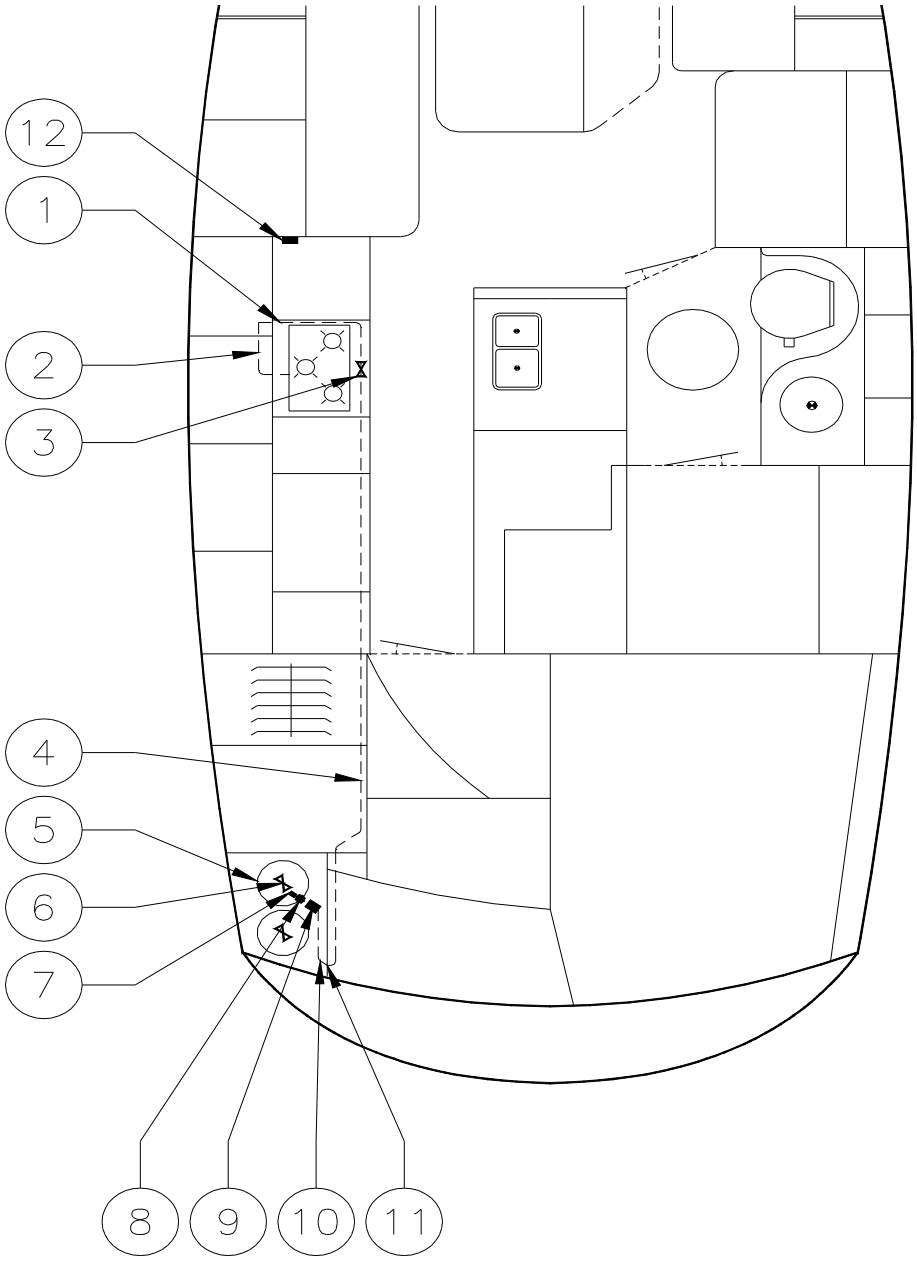

1 Gas pipe
2 Gas tube (1m)
3 Gas valve of the gas heater
4 Gas pipe
5 Gas bottle
6 Bottle valve
7 Safety valve
8 Reducing valve
9 Gas delivery valve 12V*
10 Gas tubing
11. Bulkhead pipe fitting
12. Gas delivery valve 12 V * for operation

*=optional

Skin pipe fittings

1 Work top drain pipe
2 Cooling water suppy (saildrive)
3 Cockpit self-draining system
5 Gas locker drain pipe
6 Deaeration water tank
7 Anchor locker drain pipe
8 Toilet flushing water
9 Sink drain pipe
10 Toilet drain pipe
11 Bilge pump drain pipe
12 Deaeration slop tank
13 Deaeration fuel tank
14 Expansion boiler*
15 Outlet pipe for exhaust gases
16 Electrical bilge pump
17 Sewage tank
18 Shower pump*
* option

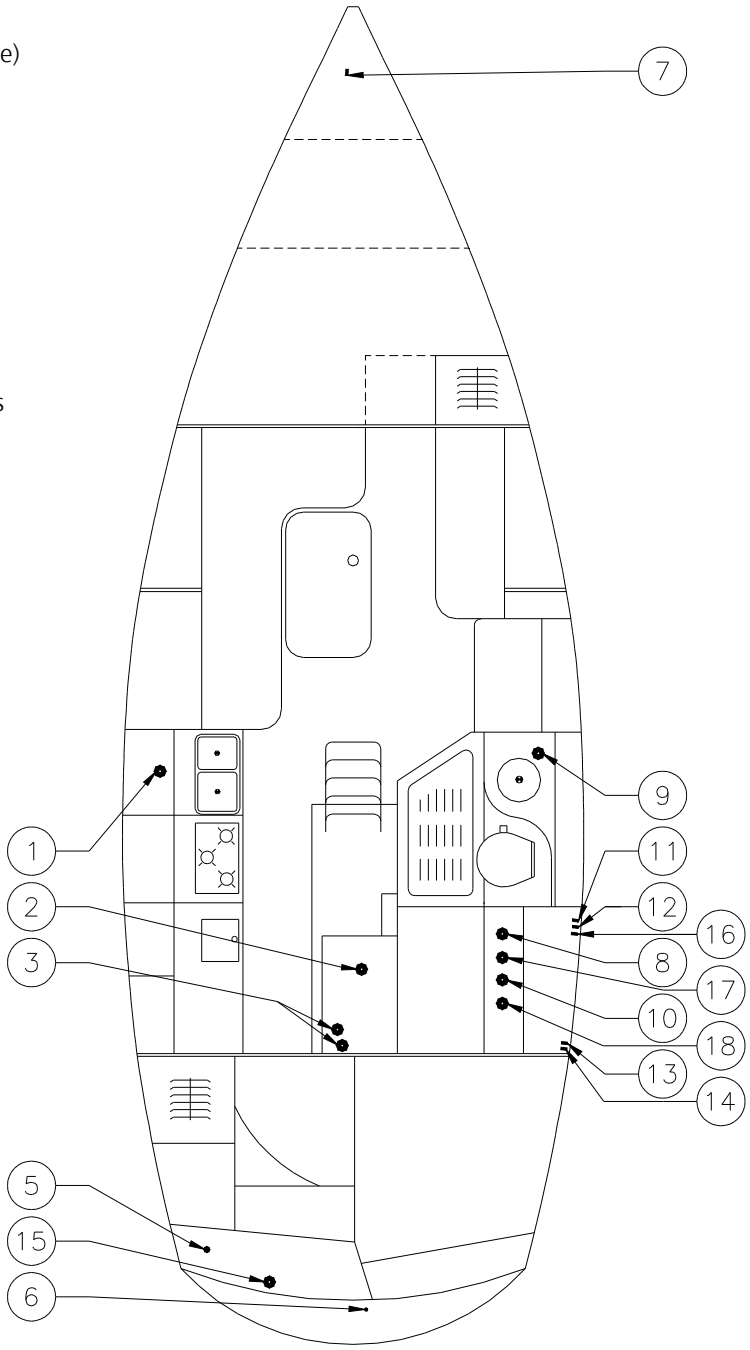

Lay-out

1 Anchor locker
2 Water-tight bulkhead
3 Double bunk
4 Locker
5 Hanging wardrobe
6 Gas stove
7 Locker
8 Wardrobe
11 NAV station
12 Instrument panel
13 Toilet
14 Sink
15 Shower
16 Sail locker/wet cell
17 Engine compartment
18 Owners cabine
19 Charger compartment

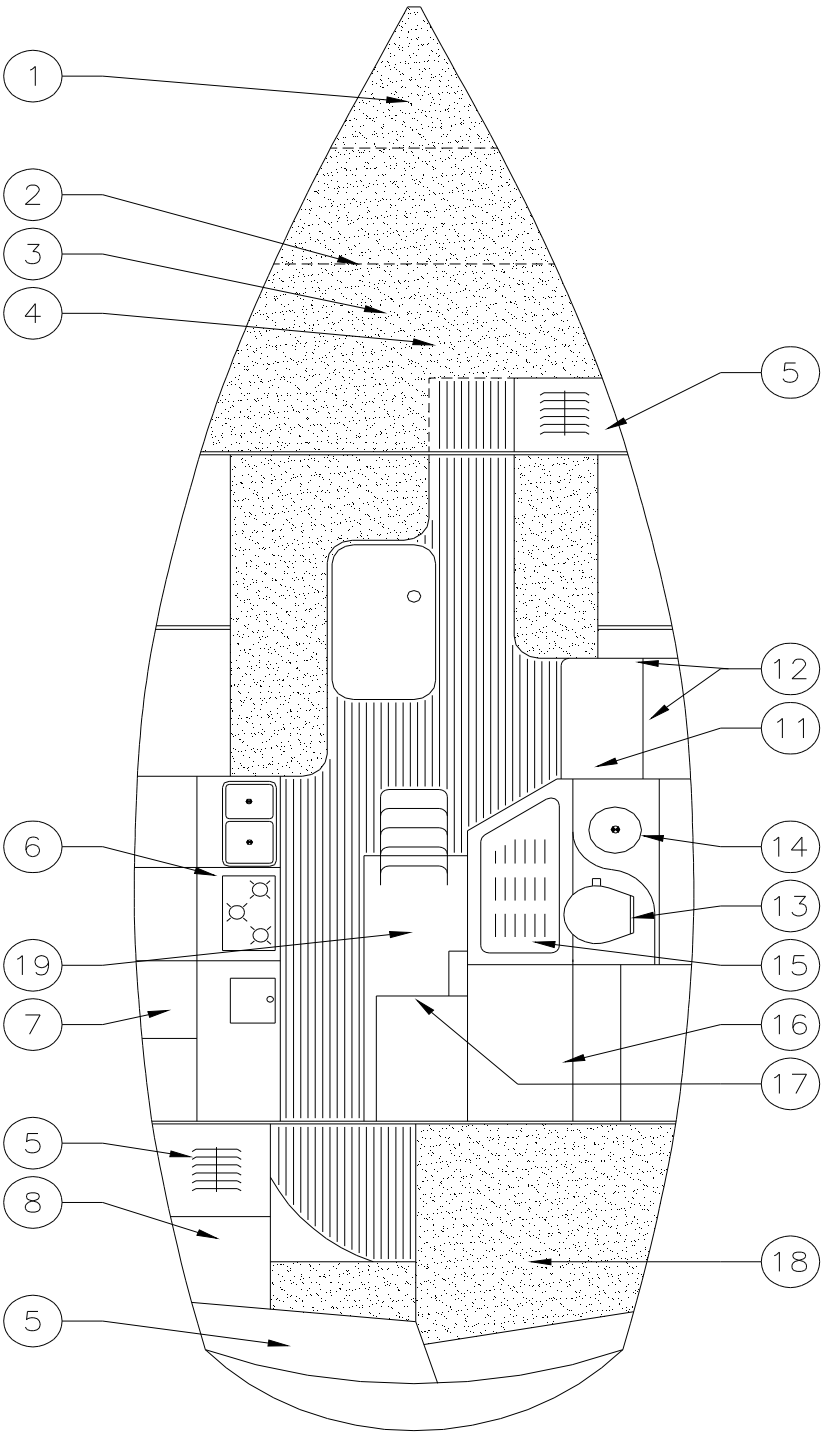

The bilge water system

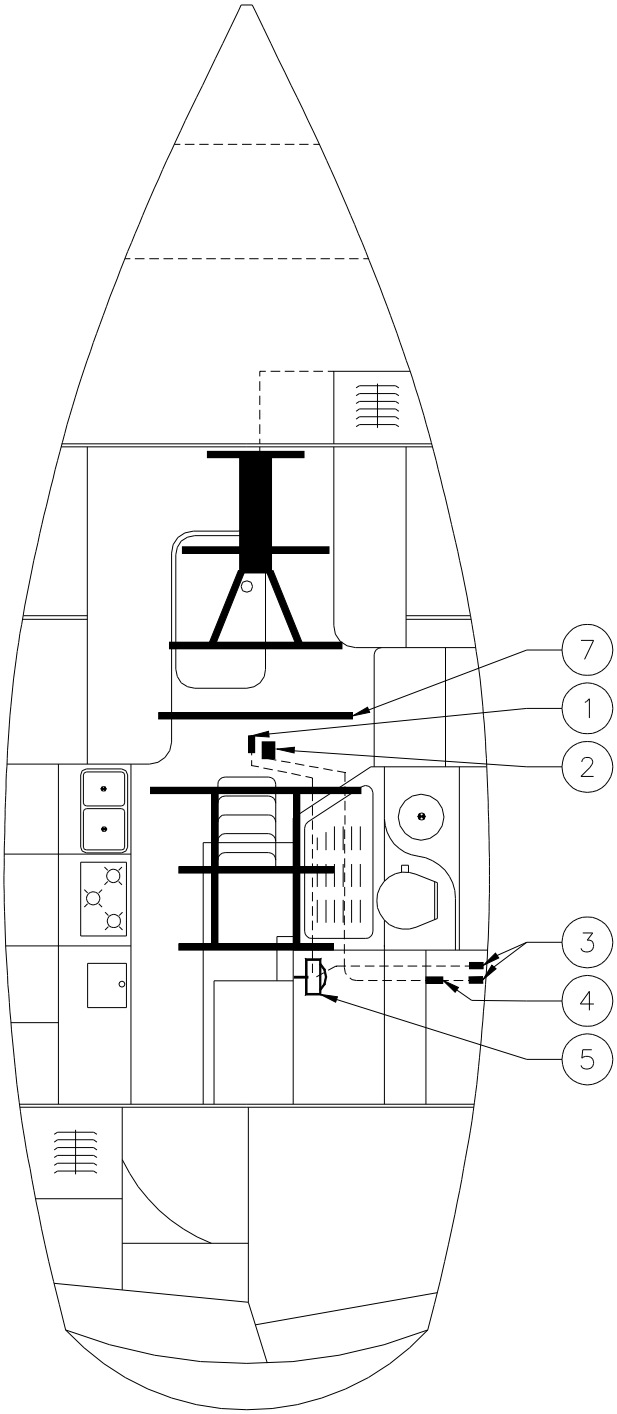

1 Bilge pump suction basket
2 Electrical bilge pump
3 Skin pipe fittings
4 Non-return valve
5 Manual bilge pump
7 Planking

The drain system

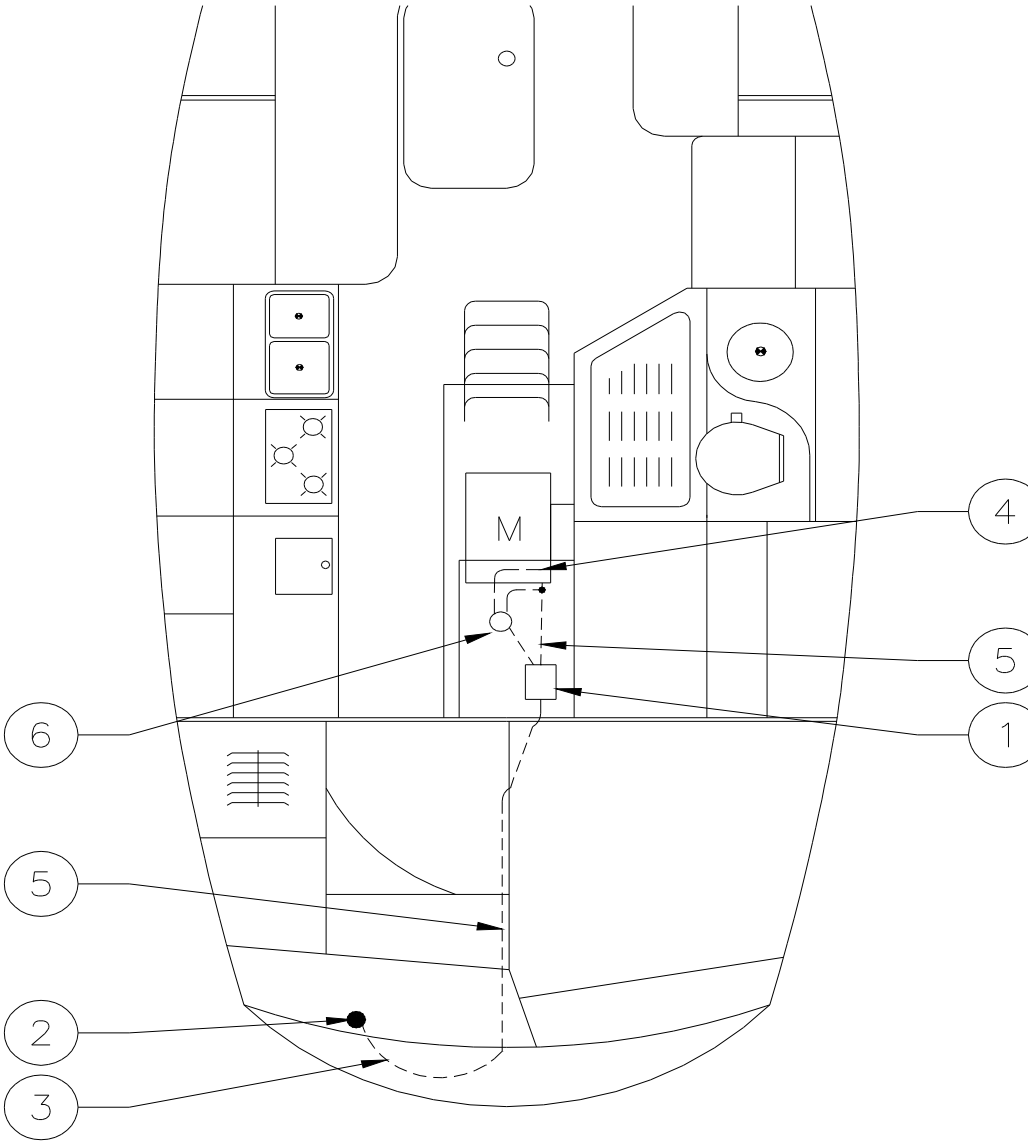

1 Water lock
2 Skin pipe fitting
3 Anti-siphoning loop
4 Ventilation tube
5 Flue gas drain pipe
6 Aerator

The sewage system

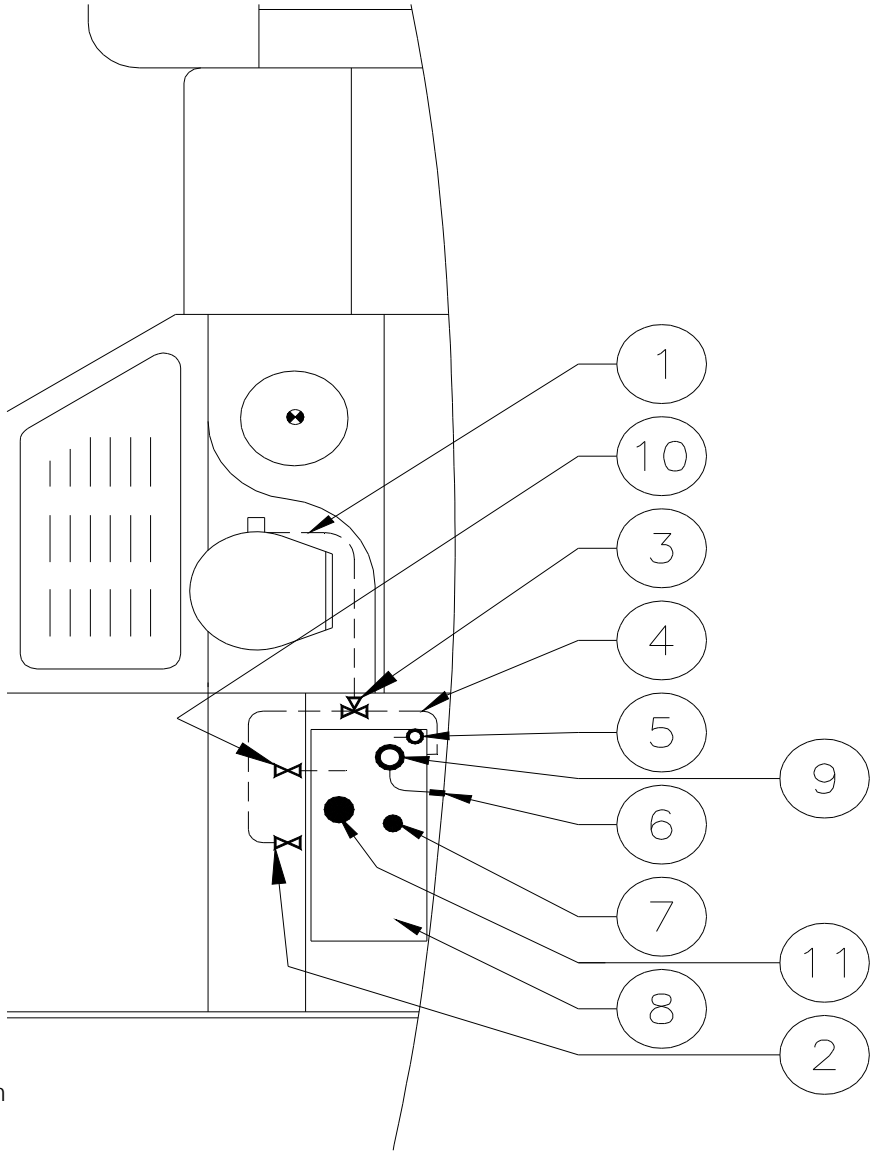

1 Toilet drain pipe
2 Seacock toilet->sea
3 Selection valve 1: tank/sea
4 Tank supply tube
5 Deck cap suction (deck)
6 Skin pipe fitting deaeration
7 Level indicator
8 Slop tank
9 Odor filter
10 Seacock tank->sea
11 Inspection lid

The water systeem

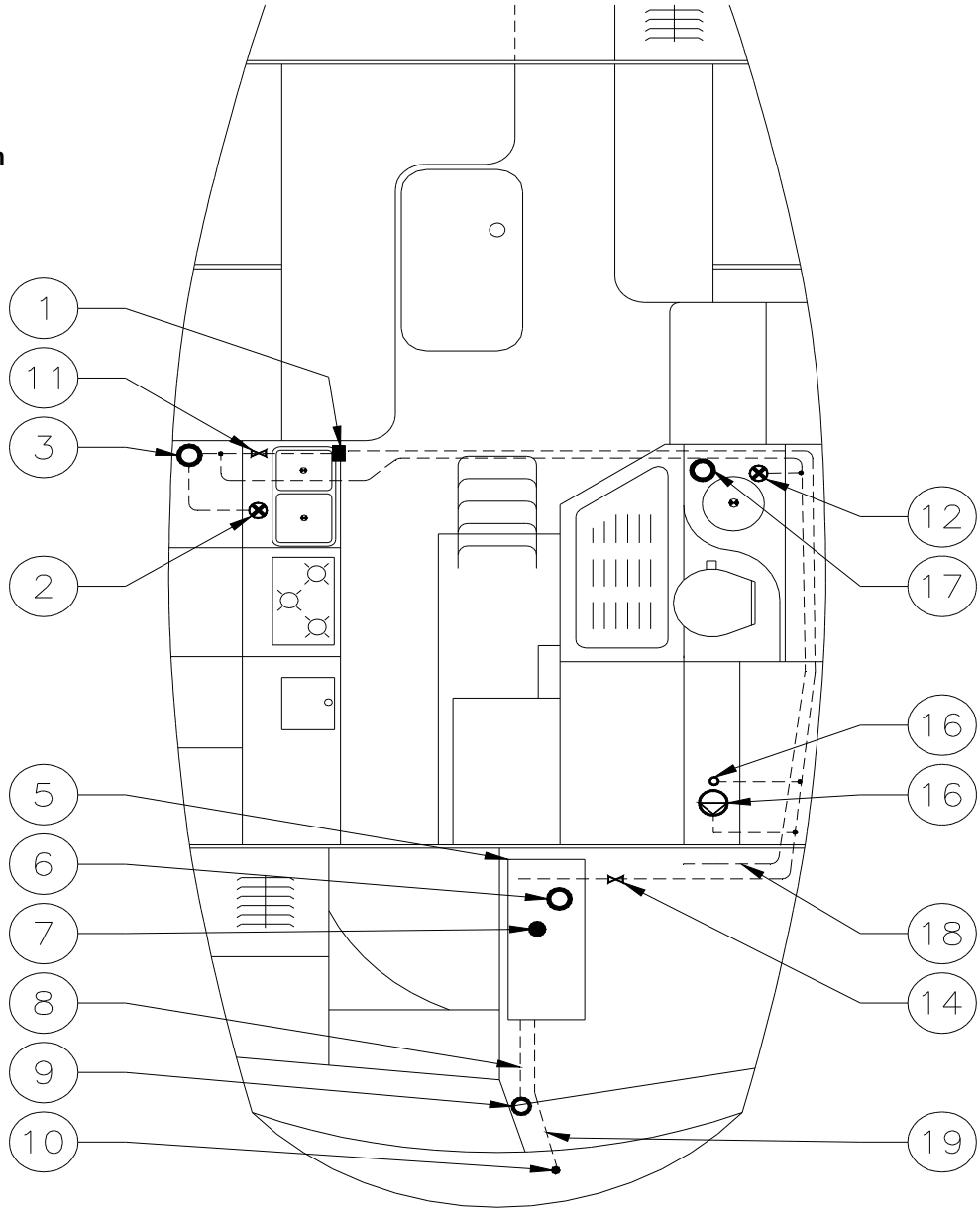

1	Foot pump	11	Valve foot pump
2	Work top valve	12	Washbasin valve
3	Carbon filter		
4	Supply tube work top valve	14	Tank valve
5	Water tank (200 l)	15	Water pump 12V
6	Inspection lid	16	Coarse filter
7	Level indicator	17	Accumulator
8	Filling tube	18	Boiler supply
9	Fill cap (deck)	19	Deaeration tube
10	Deaeration pipe fitting		

The hot water system*

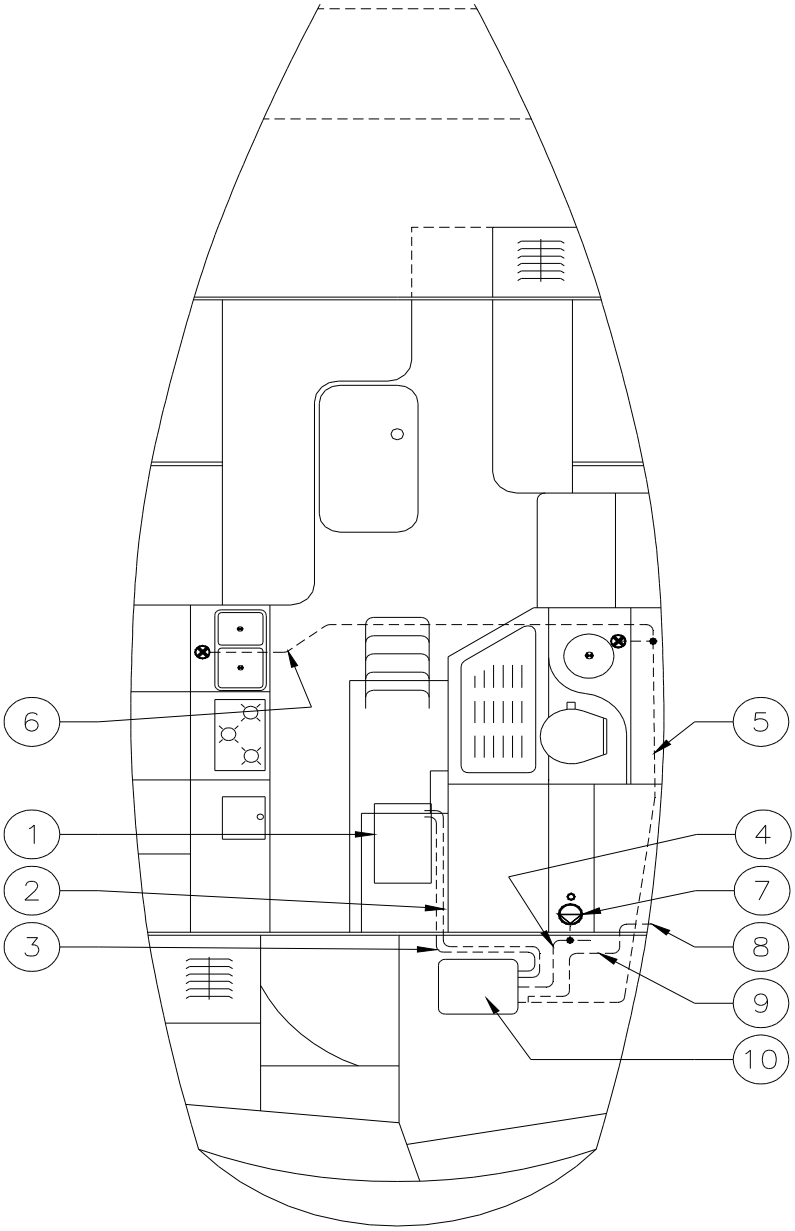

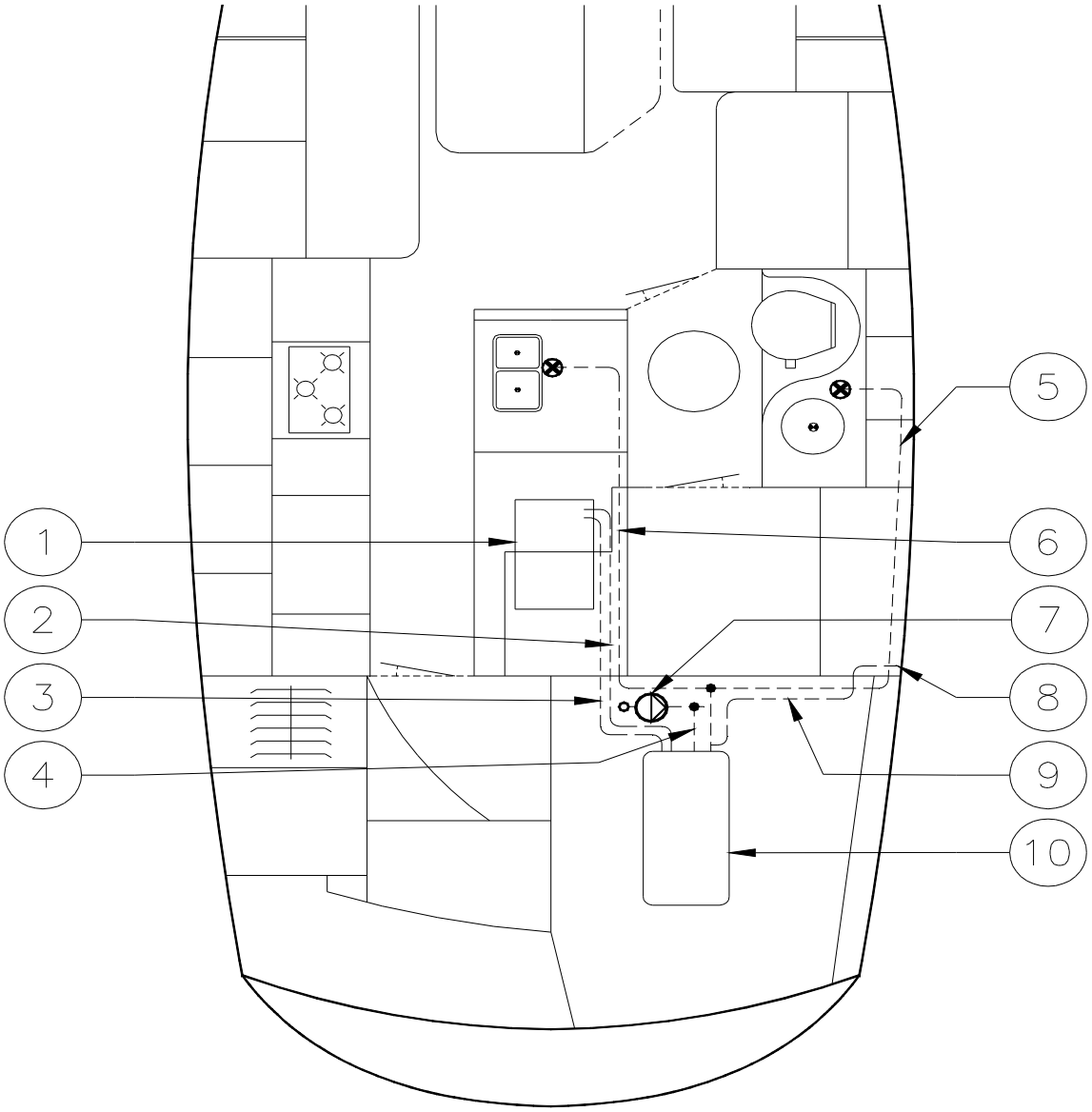

1 Motor propulsion
2 Cooling water supply
3 Cooling water drain pipe
4 Cold water supply
5 Hot water supply washbasin valve
6 Hot water supply worktop valve
7 Drinking water pump
8 Seacock expansion overflow
9 Expansion pipe
10 Boiler

On board power 220V

1 Earth leakage switch
2 Battery charger
3 Switch panel (mains switch, boiler and charger switch)
4 Shore power connection (deck)*
5 Wall outlet 220V
6 Wall outlet 220V*
7 Wall outlet battery charger
8 Wall outlet boiler

*option

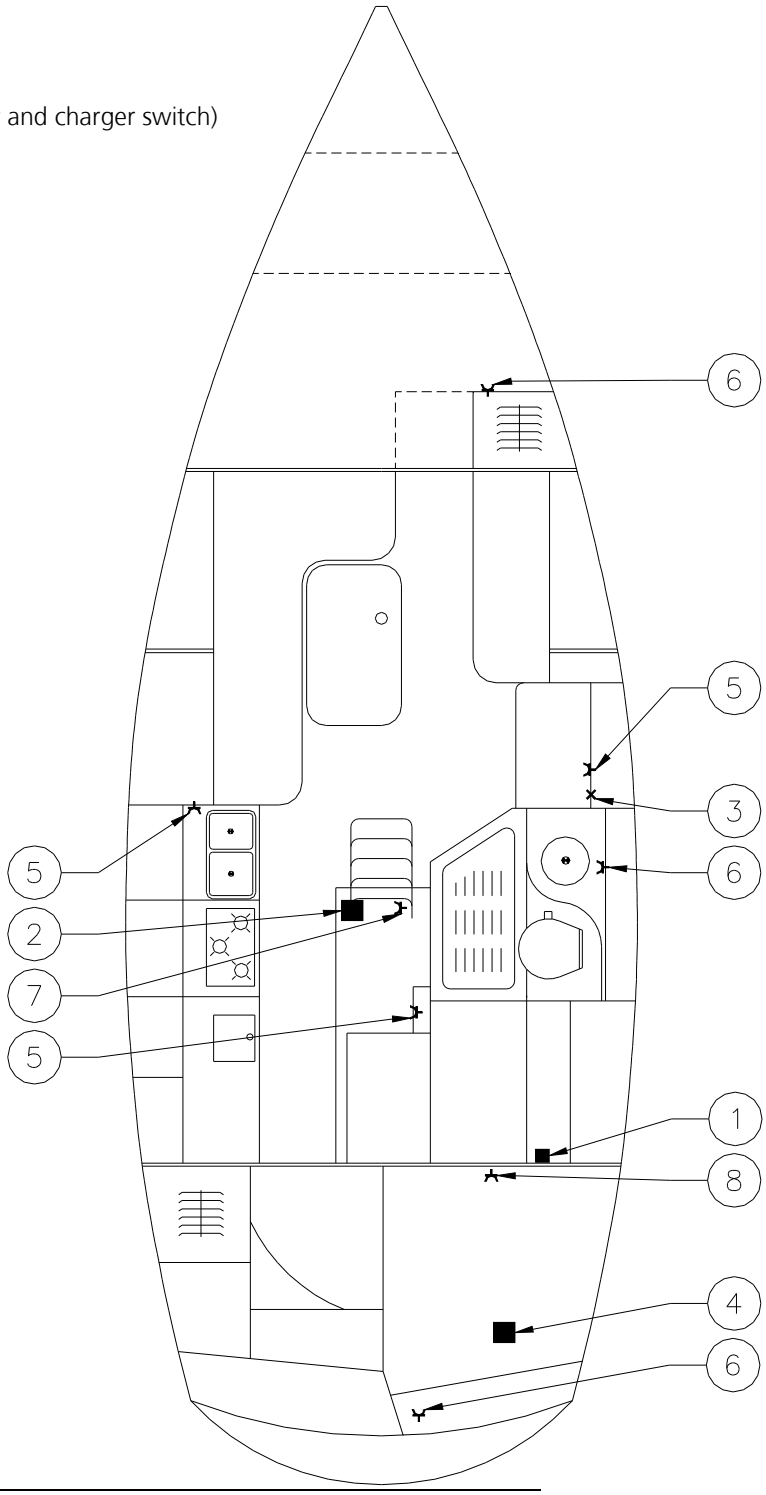

On board power 12V

1 Fuse holder charger compartment
2 Battery charger
3 Second lighting battery*
4 Lighting battery
5 Engine battery
6 Wall outlet 12V*
7 Mains switch loads
8 Mains switch motor
9 Instrument panel 12V
10 Fuse holder instrument panel
11 Wall outlet 12V standard
12 Main fuse
13 Dimmer / lighting switch AK

* option