HONDA

CRF250X

CRF250X4
CRF250X5
CRF250X6
CRF250X7
CRF250X8

PARTS CATALOGUE 5

13KSC405

© Honda Motor Co., Ltd. 2007

[CRF250X4]

FOREWORD INDEX 1

ENGINE GROUP 2

FRAME GROUP 3

PART NUMBER INDEX 4

PART NAME INDEX 5

Instruction for use of parts catalogue

- **This parts catalogue has been created as of August 01, 2007.**
  - Since this date, the sales practice for repair parts may have been changed or the parts may have been eliminated (listed for those not for sale).
  - The modified information is reflected on the latest Electronic Parts Catalogue (EPC).
    Also, refer to the parts catalogue news for any change.
  - See the parts catalogue news for any revision that is made after August 01, 2007.
- **Always specify the part number when ordering a part.**
  - Check the model, type, serial numbers, color, maker, and the size as needed before ordering a part.
  - Note that the illustrations (part drawings) can differ from the actual parts in shape.
    They are given just to help you to refer to the parts.
- **When modifications or additions to this parts catalogue are made, a revised edition will be issued at an appropriate time, with successively progressing revision numbers on the cover. We recommend obtaining such revisions in order to keep your parts catalogue up-to-date at all times. To check whether a parts catalogue revision has been issued, please contact your Honda distributor.**

Initial version issue date
January 20, 2004
Honda Motor Co., Ltd.

CONTENTS

	Page	Address No.	
● Instruction for use of parts catalogue	1	B 1	1
● How to refer to the part information	2	B 2	
● Part catalogue structure	3	B 3	
● When the parts were revised	4	B 4	
● Abbreviations used in the parts catalogue	4	B 4	
● Part block and serial number check	5	B 5	
● Models, parts catalogue codes and applicable serial numbers	6	B 6	
● Fuel hose, general purpose hoses and vinyl hose	7	B 7	
● FLAT RATE SERVICE TIME	11	B11	
● Illustrated index	16	B16	
● ENGINE GROUP	23	D 1	2
● FRAME GROUP	57	G 1	3
● PART NO. INDEX	107	K 1	4
● PART NAME INDEX	113	L 1	5

How to refer to the part information

Ⓐ Reference with “Illustrated index”

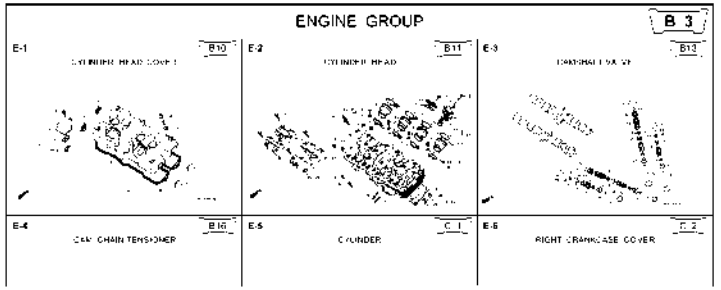

Ⓑ Reference with “Part number index”

PART NO. INDEX

Part Number	Address	Page	Ref
04000			
04911-MCE-000	C10	26	1
06000			
06405-MV5-P00	F13	67	3
06405-MV5-P10	F13	67	3
06410-MV9-860	F2	56	1
06435-MCE-006	F1	55	1
06451-166-405	E13	51	2
06451-443-405	F1	55	2
06451-MA7-405	E13	51	1
06455-MCE-006	E13	51	3
11000			
11210-MCE-000	C9	25	1
11330-MCE-305	C2	18	1
11335-KT8-000	C6	22	1
11335-MCE-000	C2	18	2
11360-MCE-000	C7	23	1
11365-MCE-000	C7	23	2
11396-MV9-000	C2	18	3
11631-MCE-000	C5	21	1
11691-MV9-000	C5	21	2
13323-MV9-751	C12	28	10
13324-MV9-751	C12	28	10
13325-MV9-751	C12	28	10
13327-MV9-751	C12	28	10
14000			
14100-MCE-000	B13	13	2
14200-MCE-000	B13	13	3
14321-MCE-000	B16	16	2
14401-MCE-003	B16	16	3
14510-MBE-000	B16	16	4
14520-MV9-691	B16	16	5
14524-MV9-690	B16	16	6
14546-MCE-000	B16	16	7
14620-MV9-691	B16	16	8
14711-MCE-000	B13	13	4
14712-MCE-000	B13	13	5
14721-MCE-000	B13	13	6
14722-MCE-000	B13	13	7
14730-MCE-000	B13	13	8
14731-MCE-000	B13	13	9
14731-MV9-751	B13	13	10
14751-KY2-000	B13	13	11
14751-MCE-000	B13	13	12
14761-MCE-000	B13	13	13

Ⓒ Reference with “Part name index”

PART NAME INDEX

Part name	Address	Page	Ref
[A]			
ADJUSTER , CHAIN	F13	67	5
ARM COMP. , GEAR CHANGE	F10	64	3
ARM , L. MAIN STEP	F11	65	8
ARM , L. PILLION STEP	F11	65	12
ARM , R. MAIN STEP	F11	65	5
ARM , R. PILLION STEP	F11	65	11
AUTO COCK ASSY., FUEL	F4	58	2
AXLE , FR. WHEEL	E14	52	3
AXLE , RR. WHEEL	F2	56	3
[B]			
BAG , AIR PRESSURE GAUGE	67	77	4
BAG , SERVICE BOOK	67	77	1
BAG , TOOL	67	77	3
BALL , STEEL,	F11	65	20
BAND A , INSULATOR	B11	11	11
BAND B , INSULATOR	B11	11	12
BAND , AIR CLEANER CONNECTING TUBE	F8	62	22
BAND , U-LOCK	F16	70	3
BAND , WIRE	C10	26	14
	E5	43	21
	C4	72	13
BOLT , CHANG			
BOLT , CLUTCH			
BOLT , CONNECT			
BOLT , DISK, 6.			
BOLT , DISK, 8.			
BOLT , DRAIN			
BOLT , FLANGE			
BOLT , FLANGE			
BOLT , FLANGE			
BOLT , FLANGE			
BOLT , FLANGE			
BOLT , FLANGE			
BOLT , FLANGE			
BOLT , FLANGE			

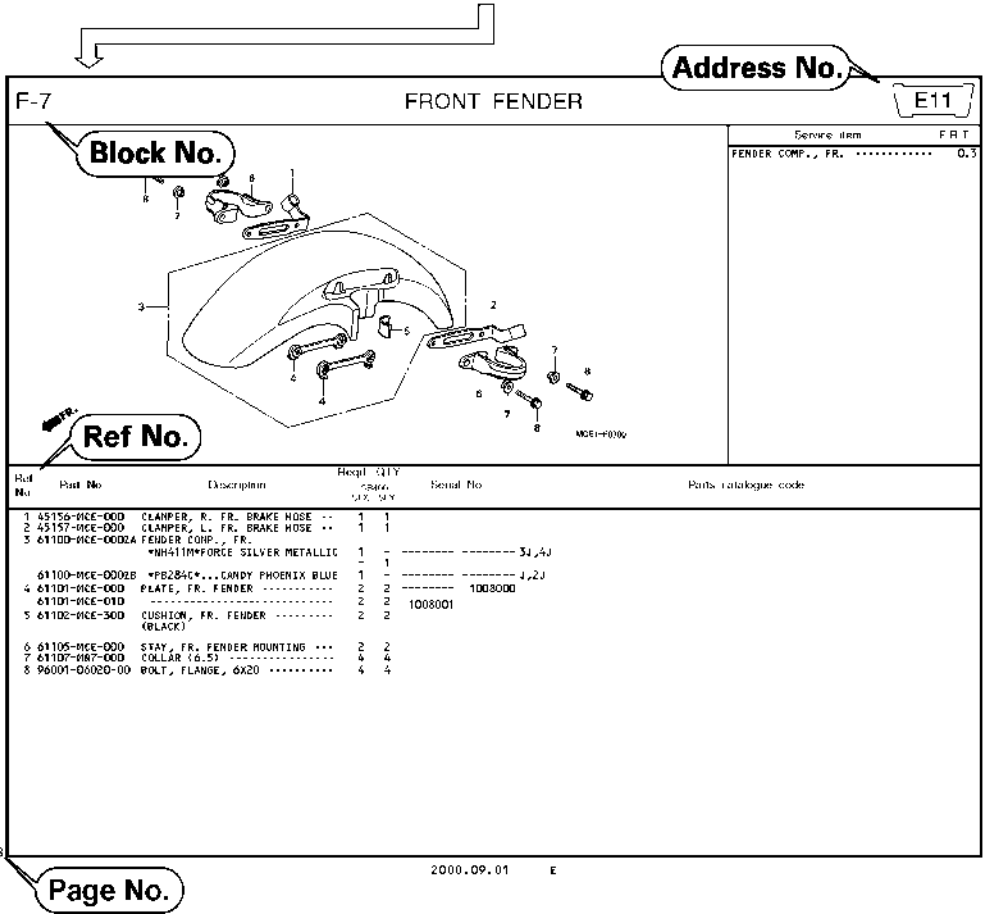

Part catalogue structure

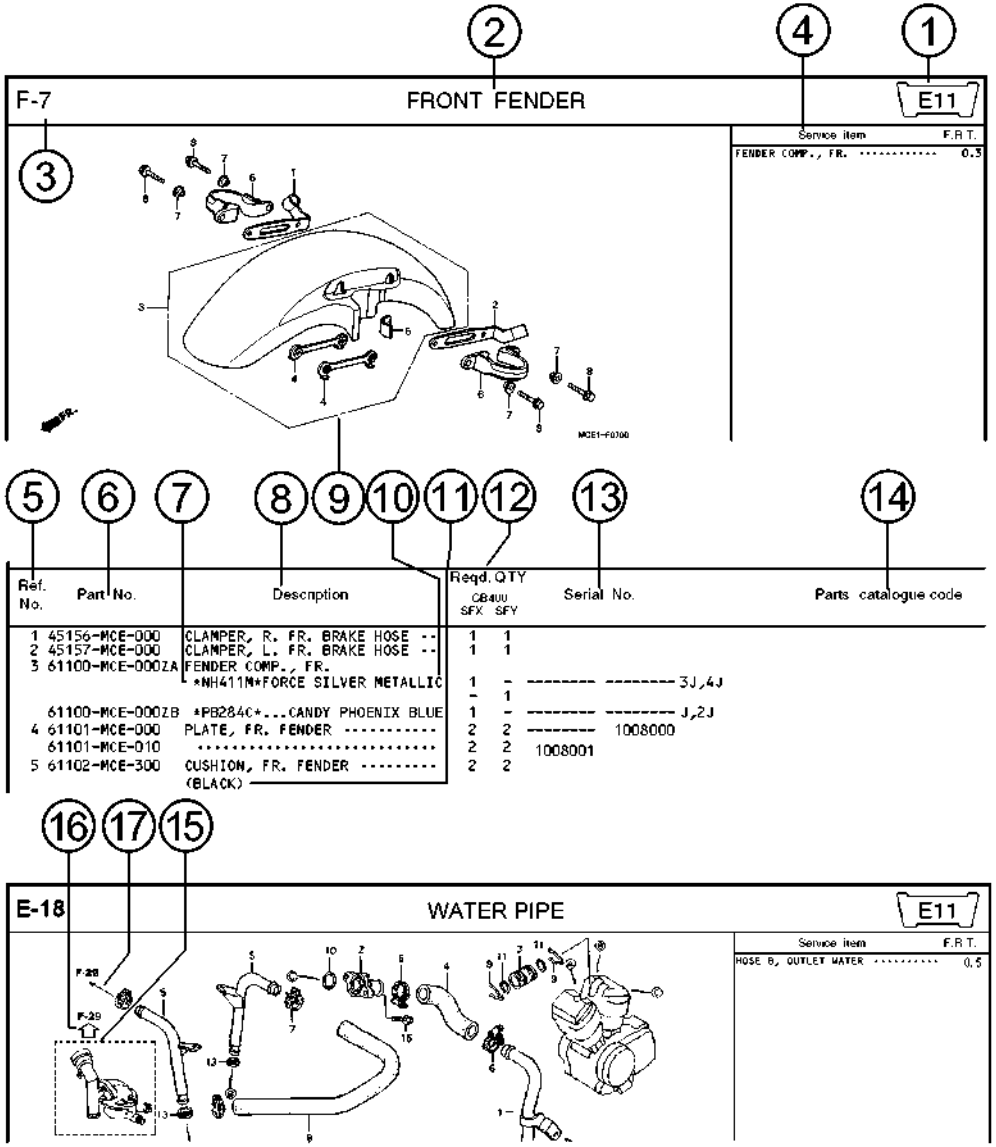

①Address number
- Address No. is provided (in place of the page No.) to help you refer to the part with the part No. or part name.

②Block title ③Block number

④Service item/Flat rate time

⑤Reference number
- Title number marked with the parenthesis or parentheses indicates that it continues from the previous page.

⑥Part number ⑦Honda color code

⑧Description

⑨Assemblies
- Sections framed with broken lines in the exploded view drawings are available as complete assemblies. (Their individual parts can also be obtained.)

⑩Color description

⑪Note
- Notes are shown with the parentheses in the part name column.

⑫Required quantity
- Reqd. QTY shown in the parenthesis or parentheses indicates the optional part.
- Reqd. QTY marked with “N” indicates the optional part that should be selected as needed.
- Reqd. QTY indicates the number of the part used in the block.

⑬Serial number

⑭Parts catalogue code
- When the parts catalogue code column is blank, it indicates that the part is applicable to all codes.

⑮ ⬚
- Parts enclosed within a dotted line ⬚ are covered in a different block.

⑯⇦
- A hollow arrow ⇦ indicates the block No. for the parts enclosed within a dotted line ⬚ .

⑰←
- A solid arrow ← indicates the block No. the part in question is connected to.

When the parts were revised

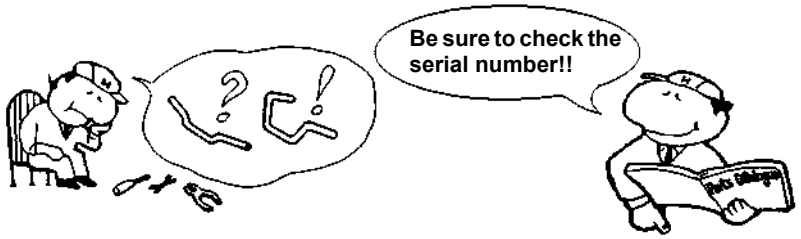

Ref. No.	Part No.	Description	Reqd. QTY CB400 SFX	Reqd. QTY CB400 SFY	Serial No.
1	45156-MCE-000	CLAMPER, R. FR. BRAKE HOSE **	1	1	
2	45157-MCE-000	CLAMPER, L. FR. BRAKE HOSE **	1	1	
3	61100-MCE-000ZA	FENDER COMP., FR. *NH411M*FORCE SILVER METALLIC	1	-	-------- --------3J,4J
			-	1	
	61100-MCE-000ZB	*PB284C*...CANDY PHOENIX BLUE	1	-	-------- --------J,2J
4	61101-MCE-000	PLATE, FR. FENDER (###)	2	2	-------- 1008000
	61101-MCE-010		2	2	1008001
5	61102-MCE-300	CUSHION, FR. FENDER (BLACK)	2	2	
6	61105-MCE-000	STAY, FR. FENDER MOUNTING	2	2	
7	61107-MR7-000	COLLAR (6.5)	4	4	
8	96001-06020-00	BOLT, FLANGE, 6X20	4	4	

The number has been used from the initial model without revision.

When shown at the left side, it is applicable to the models of No.1008001 and the subsequent numbers.

When shown at the right side, it is applicable to the models up to No.1008000.

- The parts listed with "###" at the end of the parts name have limited supply period (parts not for sale).

Abbreviations used in the parts catalogue

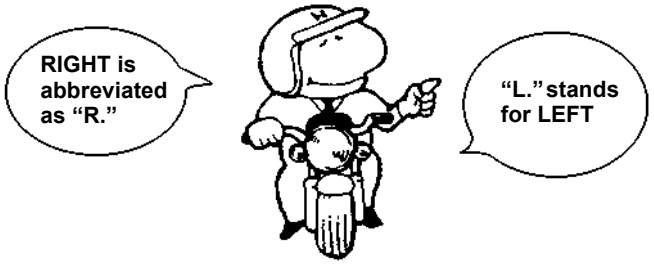

* "L." or "R." in the description of a part stands for the LEFT hand side or the RIGHT hand side. Determine the left or right as if you were in the motorcycle seat.

- **The following abbreviations are used in this parts catalogue.**

A ..... Ampere
ABS ..... Anti-lock brake system
A.C. ..... Alternating current
A.M. ..... Attaching mark
ASSY. .... Assembly
C.D.I. ..... Capacitive discharge ignition
COMP. ... Complete
D.C. ..... Direct current
EX. ..... Exhaust
FR. ..... Front
G ..... Gram
HEX. ..... Hexagonal
IN. ..... Inlet
KPH ..... Kilometers per hour
L. .....Left
L (100L) .Link (100 Links)
L.E.D. .....Light emitted diode
MM .....Millimeter
MPH .....Miles per hour
R. .....Right
RR. .....Rear
STD. .....Standard
T (22T) ...Tooth (22 Teeth)
TCS .....Traction control system
T.M. .....Transcript mark
V .....Volt
W .....Watt
WL .....With labelling
WOL .....Without labelling

Part block and serial number check

Part block	Engine parts E-1~	Carburetor parts E-20	Frame parts F-1~
Required serial number	Engine serial number	Carburetor serial number	Frame serial number
Check point	①	②	③

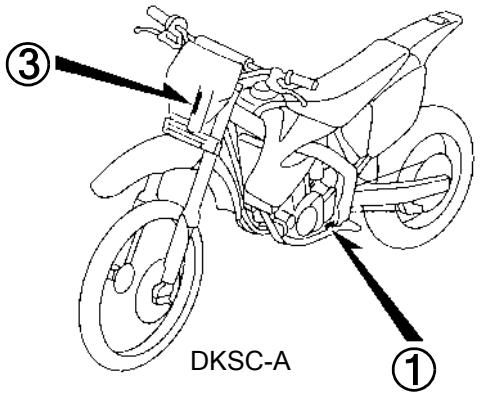

DKSC-A

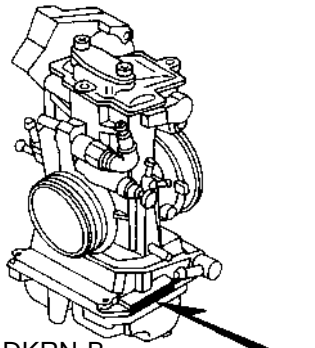

DKRN-B

②

Models, parts catalogue codes and applicable serial numbers

Models, parts catalogue codes and applicable serial Nos. given in this parts catalogue can be identified as follows.
Parts with parts catalogue codes are exclusive for models destined for countries designated.
If no area codes are listed, parts are for common use.

Model	Area code	Type	Parts catalogue code	Applicable engine serial No.	Applicable frame serial No.	Applicable carburetor identification No.
CRF250X4	ED	European direct sales	ED	ME11E-5000001~5099999	JH2ME11A*4K000001~4K099999	FCR02A A
	U	Australia	U	ME11E-5000001~5099999	JH2ME11U*4K000001~4K099999	
CRF250X5	DK	General export (KM)	DK	ME11E-5100001~5199999	JH2ME119*5M100001~5M199999	FCR02A A
	ED	European direct sales	ED	ME11E-5000001~5099999	JH2ME11A*5K110001~5K199999	
CRF250X6	ED	European direct sales	ED	ME11E-5200001~5219999	JH2ME11A*6M200001~6M209999	FCR02A A/B
			ED/A	ME11E-5220001~5229999	JH2ME11A*6K210001~6K219999	FCR02A B
			ED/B	ME11E-5230001~5239999	JH2ME11A*6M220001~6M229999	
CRF250X7	ED	European direct sales	ED	ME11E-5300001~5309999	JH2ME11A*7M300001~7M309999	FCR14A A
			ED/A	ME11E-5310001~5319999	JH2ME11A*7K310001~7K319999	
			ED/B	ME11E-5320001~5329999	JH2ME11A*7M320001~7M329999	
	U	Australia	U	ME11E-5300001~5309999	JH2ME11U*7M300001~7M309999	
			U/A	ME11E-5310001~5319999	JH2ME11U*7K310001~7K319999	
			U/B	ME11E-5320001~5329999	JH2ME11U*7M320001~7M329999	
CRF250X8	ED	European direct sales	ED	ME11E-5400001~	JH2ME11A*8M400001~	FCR14B A
	U	Australia	U	ME11E-5400001~	JH2ME11U*8M400001~	

* Of carburetor/throttle body identification numbers, only the portions underlined in the example below are used for registration.

FCR02A A KC ア

Fuel hose, general purpose hoses and vinyl hose

- The standard part fuel hose, general purpose hose and vinyl hose may be substituted by the coiled bulk part.
- When ordering the standard part fuel hose, general purpose hose and vinyl hose use the bulk part number written in the parts catalogue in brackets ( ) underneath the part name, or use the catalogue below.
  (The bulk part standard length is 1 m, however, those displayed in the catalogue < > are available in 3 m and 8 m lengths.)
- When exchanging the hose, cut and use at the specified length as mentioned in the part name.
  (For the method of cutting the bulk part, and method of filling out orders etc., please refer to the service manual and the instructions issued with the bulk part.)

- The list below is a catalogue of the standard part numbers and bulk part numbers. Note that those numbers are applicable to the listed replacement parts only.

Fuel hoses/Tubes

Standard part No.	Bulk part No.	Bulk part	
		Inner diameter (mm)	Length (m)
95001-30xxx-2x	95001-30001-20M	3.0	1
95001-30xxx-3x	95001-30001-30M	3.0	1
95001-30xxx-4x	95001-30001-40M	3.0	1
95001-35xxx-2x	95001-35001-50M <95001-35003-50M>	3.5	1 3
95001-35xxx-3x	95001-35001-60M <95001-35003-60M>	3.5	1 3
95001-35xxx-4x	95001-35001-60M <95001-35003-60M>	3.5	1 3
95001-35xxx-5x	95001-35001-50M <95001-35003-50M>	3.5	1 3
95001-35xxx-6x	95001-35001-60M <95001-35003-60M>	3.5	1 3
95001-45xxx-2x	95001-45001-50M <95001-45003-50M>	4.5	1 3
95001-45xxx-3x	95001-45001-60M <95001-45003-60M> <95001-45008-60M>	4.5	1 3 8
95001-45xxx-4x	95001-45001-60M <95001-45003-60M> <95001-45008-60M>	4.5	1 3 8
95001-45xxx-5x	95001-45001-50M <95001-45003-50M>	4.5	1 3
95001-45xxx-6x	95001-45001-60M <95001-45003-60M> <95001-45008-60M>	4.5	1 3 8
95001-55xxx-2x	95001-55001-50M <95001-55003-50M> <95001-55008-50M>	5.5	1 3 8

Fuel hoses/Tubes

Standard part No.	Bulk part No.	Bulk part	
		Inner diameter (mm)	Length (m)
95001-55xxx-3x	95001-55001-60M <95001-55003-60M> <95001-55008-60M>	5.5	1 3 8
95001-55xxx-4x	95001-55001-60M <95001-55003-60M> <95001-55008-60M>	5.5	1 3 8
95001-55xxx-5x	95001-55001-50M <95001-55003-50M> <95001-55008-50M>	5.5	1 3 8
95001-55xxx-6x	95001-55001-60M <95001-55003-60M> <95001-55008-60M>	5.5	1 3 8
95001-75xxx-2x	95001-75001-50M <95001-75003-50M>	7.5	1 3
95001-75xxx-3x	95001-75001-60M <95001-75003-60M> <95001-75008-60M>	7.5	1 3 8
95001-75xxx-4x	95001-75001-60M <95001-75003-60M> <95001-75008-60M>	7.5	1 3 8
95001-75xxx-5x	95001-75001-50M <95001-75003-50M>	7.5	1 3
95001-75xxx-6x	95001-75001-60M <95001-75003-60M> <95001-75008-60M>	7.5	1 3 8
95001-80xxx-2x	95001-80001-50M	8.0	1
95001-80xxx-3x	95001-80001-60M	8.0	1
95001-80xxx-4x	95001-80001-60M	8.0	1
95001-80xxx-5x	95001-80001-50M	8.0	1
95001-80xxx-6x	95001-80001-60M	8.0	1

Vinyl tube

Standard part No.	Bulk part No.	Bulk part		
		Inner dia- meter (mm)	Outer dia-meter (mm)	Length (m)
95003-01xxx-3x	95003-01001-60M <95003-01003-60M>	2.9	6.8	1 3
95003-01xxx-60	95003-01001-60M <95003-01003-60M>	2.9	6.8	1 3
95003-03xxx-3x	95003-03001-60M <95003-03003-60M>	3.0	6.0	1 3
95003-03xxx-60	95003-03001-60M <95003-03003-60M>	3.0	6.0	1 3
95003-05xxx-3x	95003-05001-60M <95003-05003-60M> <95003-05008-60M>	3.5	6.5	1 3 8
95003-05xxx-60	95003-05001-60M <95003-05003-60M> <95003-05008-60M>	3.5	6.5	1 3 8
95003-07xxx-1x	95003-07001-10M <95003-07003-10M> <95003-07008-10M>	4.0	7.0	1 3 8
95003-07xxx-20	95003-07001-10M <95003-07003-10M> <95003-07008-10M>	4.0	7.0	1 3 8
95003-07xxx-3x	95003-07001-60M <95003-07003-60M> <95003-07008-60M>	4.0	7.0	1 3 8
95003-07xxx-60	95003-07001-60M <95003-07003-60M> <95003-07008-60M>	4.0	7.0	1 3 8
95003-07xxx-7x	95003-07001-70M <95003-07003-70M> <95003-07008-70M>	4.0	7.0	1 3 8
95003-08xxx-1x	95003-08001-10M <95003-08003-10M> <95003-08008-10M>	4.5	6.5	1 3 8
95003-09xxx-3x	95003-09001-60M <95003-09003-60M>	4.5	8.0	1 3
95003-09xxx-60	95003-09001-60M <95003-09003-60M>	4.5	8.0	1 3
95003-10xxx-1x	95003-10001-10M <95003-10003-10M>	5.0	8.0	1 3
95003-10xxx-20	95003-10001-10M <95003-10003-10M>	5.0	8.0	1 3
95003-10xxx-3x	95003-10001-60M <95003-10003-60M>	5.0	8.0	1 3
95003-10xxx-60	95003-10001-60M <95003-10003-60M>	5.0	8.0	1 3
95003-11xxx-3x	95003-11001-60M <95003-11003-60M> <95003-11008-60M>	5.0	9.0	1 3 8
95003-11xxx-60	95003-11001-60M <95003-11003-60M> <95003-11008-60M>	5.0	9.0	1 3 8
95003-12xxx-1x	95003-12001-10M <95003-12003-10M> <95003-12008-10M>	5.0	7.0	1 3 8
95003-12xxx-20	95003-12001-10M <95003-12003-10M> <95003-12008-10M>	5.0	7.0	1 3 8

Vinyl tube

Standard part No.	Bulk part No.	Bulk part		
		Inner dia- meter (mm)	Outer dia-meter (mm)	Length (m)
95003-14xxx-1x	95003-14001-10M <95003-14003-10M>	6.0	9.0	1 3
95003-14xxx-20	95003-14001-10M <95003-14003-10M>	6.0	9.0	1 3
95003-14xxx-3x	95003-14001-60M <95003-14003-60M>	6.0	9.0	1 3
95003-17xxx-1x	95003-17001-10M <95003-17003-10M>	7.0	9.0	1 3
95003-19xxx-1x	95003-19001-10M <95003-19003-10M> <95003-19008-10M>	7.0	11.0	1 3 8
95003-19xxx-20	95003-19001-10M <95003-19003-10M> <95003-19008-10M>	7.0	11.0	1 3 8
95003-19xxx-3x	95003-19001-60M <95003-19003-60M> <95003-19008-60M>	7.0	11.0	1 3 8
95003-19xxx-60	95003-19001-60M <95003-19003-60M> <95003-19008-60M>	7.0	11.0	1 3 8
95003-21xxx-1x	95003-21001-10M <95003-21003-10M>	8.0	9.0	1 3
95003-21xxx-20	95003-21001-10M <95003-21003-10M>	8.0	9.0	1 3
95003-23xxx-1x	95003-23001-10M <95003-23003-10M>	8.0	12.0	1 3
95003-23xxx-20	95003-23001-10M <95003-23003-10M>	8.0	12.0	1 3
95003-23xxx-3x	95003-23001-60M <95003-23003-60M> <95003-23008-60M>	8.0	12.0	1 3 8
95003-23xxx-60	95003-23001-60M <95003-23003-60M> <95003-23008-60M>	8.0	12.0	1 3 8
95003-25xxx-1x	95003-25001-10M <95003-25003-10M>	9.0	11.0	1 3
95003-25xxx-20	95003-25001-10M <95003-25003-10M>	9.0	11.0	1 3
95003-25xxx-3x	95003-25001-60M <95003-25003-60M>	9.0	11.0	1 3
95003-25xxx-7x	95003-25001-70M <95003-25003-70M>	9.0	11.0	1 3
95003-27xxx-1x	95003-27001-10M <95003-27003-10M>	9.0	13.0	1 3
95003-27xxx-20	95003-27001-10M <95003-27003-10M>	9.0	13.0	1 3
95003-27xxx-3x	95003-27001-60M <95003-27003-60M>	9.0	13.0	1 3
95003-27xxx-60	95003-27001-60M <95003-27003-60M>	9.0	13.0	1 3
95003-33xxx-1x	95003-33001-10M <95003-33003-10M>	10.0	14.0	1 3
95003-33xxx-20	95003-33001-10M <95003-33003-10M>	10.0	14.0	1 3

Vinyl tube

Standard part No.	Bulk part No.	Bulk part		
		Inner dia- meter (mm)	Outer dia-meter (mm)	Length (m)
95003-36xxx-1x	95003-36001-10M <95003-36003-10M> <95003-36008-10M>	11.0	13.0	1 3 8
95003-36xxx-20	95003-36001-10M <95003-36003-10M> <95003-36008-10M>	11.0	13.0	1 3 8
95003-37xxx-3x	95003-37001-60M 95003-37003-60M>	11.0	15.0	1 3
95003-37xxx-60	95003-37001-60M <95003-37003-60M>	11.0	15.0	1 3
95003-38xxx-1x	95003-38001-10M <95003-38003-10M>	12.0	13.0	1 3
95003-38xxx-20	95003-38001-10M <95003-38003-10M>	12.0	13.0	1 3
95003-39xxx-1x	95003-39001-10M <95003-39003-10M>	12.0	14.0	1 3
95003-39xxx-20	95003-39001-10M <95003-39003-10M>	12.0	14.0	1 3
95003-40xxx-20	95003-40001-10M <95003-40003-10M>	12.0	16.0	1 3
95003-40xxx-3x	95003-40001-60M <95003-40003-60M>	12.0	16.0	1 3
95003-40xxx-60	95003-40001-60M <95003-40003-60M>	12.0	16.0	1 3
95003-43xxx-1x	95003-43001-10M <95003-43003-10M> <95003-43008-10M>	13.0	15.0	1 3 8
95003-43xxx-20	95003-43001-10M <95003-43003-10M> <95003-43008-10M>	13.0	15.0	1 3 8
95003-45xxx-1x	95003-45001-10M <95003-45003-10M> <95003-45008-10M>	14.0	18.0	1 3 8
95003-45xxx-20	95003-45001-10M <95003-45003-10M> <95003-45008-10M>	14.0	18.0	1 3 8
95003-50xxx-1x	95003-50001-10M <95003-50003-10M>	16.0	19.0	1 3
95003-50xxx-20	95003-50001-10M <95003-50003-10M>	16.0	19.0	1 3
95003-50xxx-3x	95003-50001-60M <95003-50003-60M>	16.0	19.0	1 3
95003-55xxx-1x	95003-55001-10M <95003-55003-10M>	17.5	20.5	1 3
95003-55xxx-20	95003-55001-10M <95003-55003-10M>	17.5	20.5	1 3
95003-60xxx-1x	95003-60001-10M <95003-60003-10M>	22.0	27.0	1 3
95003-60xxx-20	95003-60001-10M <95003-60003-10M>	22.0	27.0	1 3
95003-60xxx-3x	95003-60001-60M <95003-60003-60M>	22.0	27.0	1 3
95003-60xxx-60	95003-60001-60M <95003-60003-60M>	22.0	27.0	1 3

General purpose hoses			
Standard part No.	Bulk part No.	Bulk part	
		Inner diameter (mm)	Length (m)
95005-11xxx-3x	95005-11001-30M	11.0	1
95005-11xxx-5x	95005-11001-50M	11.0	1
95005-12xxx-1x	95005-12001-10M <95005-12003-10M>	12.0	1 3
95005-12xxx-2x	95005-12001-20M	12.0	1
95005-12xxx-3x	95005-12001-30M	12.0	1
95005-12xxx-5x	95005-12001-50M	12.0	1
95005-14xxx-1x	95005-14001-10M	14.0	1
95005-14xxx-2x	95005-14001-20M <95005-14003-20M>	14.0	1 3
95005-14xxx-3x	95005-14001-30M	14.0	1
95005-14xxx-5x	95005-14001-50M	14.0	1
95005-17xxx-1x	95005-17001-10M	17.0	1
95005-17xxx-2x	95005-17001-20M	17.0	1
95005-17xxx-3x	95005-17001-30M	17.0	1
95005-17xxx-5x	95005-17001-50M	17.0	1
95005-30xxx-3x	95005-30001-30M	3.0	1
95005-30xxx-5x	95005-30001-50M	3.0	1
95005-35xxx-1x	95005-35001-10M <95005-35003-10M> <95005-35008-10M>	3.5	1 3 8
95005-35xxx-2x	95005-35001-20M	3.5	1
95005-35xxx-3x	95005-35001-30M	3.5	1
95005-35xxx-4x	95005-35001-10M <95005-35003-10M> <95005-35008-10M>	3.5	1 3 8
95005-35xxx-5x	95005-35001-50M	3.5	1
95005-45xxx-1x	95005-45001-10M <95005-45003-10M> <95005-45008-10M>	4.5	1 3 8
95005-45xxx-2x	95005-45001-20M	4.5	1
95005-45xxx-3x	95005-45001-30M	4.5	1

General purpose hoses			
Standard part No.	Bulk part No.	Bulk part	
		Inner diameter (mm)	Length (m)
95005-45xxx-4x	95005-45001-10M <95005-45003-10M> <95005-45008-10M>	4.5	1 3 8
95005-45xxx-5x	95005-45001-50M	4.5	1
95005-50xxx-3x	95005-50001-30M <95005-50003-30M>	5.0	1 3
95005-50xxx-5x	95005-50001-50M	5.0	1
95005-55xxx-1x	95005-55001-10M <95005-55003-10M> <95005-55008-10M>	5.3	1 3 8
95005-55xxx-2x	95005-55001-20M <95005-55003-20M>	5.3	1 3
95005-55xxx-4x	95005-55001-10M <95005-55003-10M> <95005-55008-10M>	5.3	1 3 8
95005-65xxx-1x	95005-65001-10M <95005-65003-10M>	6.5	1 3
95005-65xxx-2x	95005-65001-20M	6.5	1
95005-70xxx-3x	95005-70001-30M <95005-70003-30M>	7.0	1 3
95005-70xxx-5x	95005-70001-50M	7.0	1
95005-75xxx-1x	95005-75001-10M <95005-75003-10M>	7.3	1 3
95005-75xxx-2x	95005-75001-20M	7.3	1
95005-80xxx-1x	95005-80001-10M <95005-80003-10M>	8.0	1 3
95005-80xxx-2x	95005-80001-20M	8.0	1
95005-80xxx-3x	95005-80001-30M	8.0	1
95005-80xxx-5x	95005-80001-50M	8.0	1
95005-91xxx-3x	95005-91001-30M	12.0	1
95005-91xxx-5x	95005-91001-50M	12.0	1
95005-92xxx-3x	95005-92001-30M	12.0	1
95005-92xxx-5x	95005-92001-50M	12.0	1

NOTE: X is displayed to represent the omitted numerals and letters of the roman alphabet.

◎ **CAUTION: It is DANGEROUS to confuse the fuel hose with the general purpose hose or vinyl hose.**

Never use a general purpose hose or vinyl hose in place of a fuel hose or vice versa. Always use the correct bulk part in the parts catalogue, according to the service manual or the instructions issued with the bulk part.

• Bulk part number of fuel hose, general purpose hose and vinyl hose.

(Example)

95001-75001-50M

Bulk part number: Refers to the bulk part.

Marking code (hose type): (fuel hose and general purpose hose)
Change code (for added hose): (Vinyl hose)
• Indicates number mark or change sequence, however, the code for the bulk part must be strictly 0 (zero).

Types of code:

• Fuel hose	• Vinyl hose	• General hose
2: Red outside braid (3 mm inside dia. only)	1: Clear	1: Ash gray
5: Black inside braid	2: Black	2: Ash gray
3: Red (3 mm inside dia. only)	3: Light red	3: Black
4: Ash gray with red stripe (3 mm inside dia. only)	6: Light red	5: Black
6: Black	7: Pale black	

Lengths:
001: 1 m (standard)
003: 3 m
008: 8 m

I.D code: (fuel hose and general purpose hose)

30: 3.0 mm	11: 11 mm
35: 3.5 mm	91: 12 mm (outside dia. 15) mm
45: 4.5 mm	92: 12 mm (outside dia. 16) mm
50: 5.0 mm	12: 12 mm (outside dia. 17) mm
55: 5.3 mm, 5.5 mm	14: 14 mm
65: 6.5 mm	17: 17 mm
70: 7.0 mm	
75: 7.3 mm, 7.5 mm	
80: 8.0 mm	

ID./OD. code: (vinyl hose)

01: ID. 2.9, OD. 6.8 mm	14: ID. 6.0, OD. 9.0 mm	37: ID. 11.0, OD. 15.0 mm
03: ID. 3.0, OD. 6.0 mm	17: ID. 7.0, OD. 9.0 mm	38: ID. 12.0, OD. 13.0 mm
05: ID. 3.5, OD. 6.5 mm	19: ID. 7.0, OD. 11.0 mm	39: ID. 12.0, OD. 14.0 mm
07: ID. 4.0, OD. 7.0 mm	21: ID. 8.0, OD. 9.0 mm	40: ID. 12.0, OD. 16.0 mm
08: ID. 4.5, OD. 6.5 mm	23: ID. 8.0, OD. 12.0 mm	43: ID. 13.0, OD. 15.0 mm
09: ID. 4.5, OD. 8.0 mm	25: ID. 9.0, OD. 11.0 mm	45: ID. 14.0, OD. 18.0 mm
12: ID. 5.0, OD. 7.0 mm	27: ID. 9.0, OD. 13.0 mm	50: ID. 16.0, OD. 19.0 mm
10: ID. 5.0, OD. 8.0 mm	33: ID. 10.0, OD. 14.0 mm	55: ID. 17.5, OD. 20.5 mm
11: ID. 5.0, OD. 9.0 mm	36: ID. 11.0, OD. 13.0 mm	60: ID. 22.0, OD. 27.0 mm

Hose type:
1: Fuel hose
3: Vinyl hose
5: General hose

FLAT RATE SERVICE TIME

Flat rate service time (FRT) means the standard time required to service a MC, which is listed in this manual to help the dealers control the actual working process and calculate the service charge by using it as a guide.

FRT setting system

- Net service time
  - Removal, Disassembly/reassembly, Installation
  - Inspection, Measurement, Adjustment, Confirmation
  - Diagnosis/troubleshooting (Electric system)
  - Completion inspection
- Float time
  - Preparation (Process check, Confirmation arrangement for necessary tools)
  - Related work (Transfer of vehicles)

* Float time is set by multiplying the net service time by a given coefficient.

Editorial style

The service items shown in the text are listed with the exchange work time for the repair sales parts as the subject. Other representative service items not using repair parts (removal/ installation, adjustment, inspection/measuring, and other work) are listed collectively in the list in the preface, classified according to the work.

FRT setting standard

- Decimal system (in unit of 0.1) is adopted to set FRT as it is convenient to calculate the wage.
  Example: (0.1)→6 minutes, (0.2)→12 minutes
  [Labor cost per hour] x [FRT] = [Wage]
- FRT is set with a hand tool.
- Service items and FRT can be subject to change depending on development of tools and service equipment and improvement in service procedure.

Work procedure

- As the work procedure is set with the work time according to the method in the separate Service Manual, refer to this Manual as required.
- Work methods permitting servicing in the shortest time still permitting assurance of safe work and product warranty are used for the setting of service items not listed in the Service Manual.
- Work basically is to be performed by one person, and when two or more people are required, setting is done as the total time for the number of people.
- The set value for the technological level of the workers uses a person with three years of experience in the repair of Honda vehicles as the standard.
- Special tools and service equipment used to set FRT are those specified or recommended in Service Manual.

Service item whose FRT is not presented

- Accessories and service parts that are not listed to use in this manual.
- Locations with little aging deterioration or breakage during normal use.
- Service work that can be finished by one touch.
- Service work that is seldom done (i.e. extremely small causes of trouble and service frequency).

* When FRT is not presented, please calculate wages based on appropriate actual work time

Operation not included of FRT

- Oil and coolant water draining, Waiting time for warming up operation and etc..
- Additional operation that involves removal/installation of standard exterior equipment.
- Indirect time spent for service by visiting the customer, trade-in, and delivery of a MC.
- Indirect time required for ordering and delivery of parts.
- Cost for grease, adhesive agent, etc. used for service work.

Explanation of FRT by using an example
(The example may differ from the actual presented items)

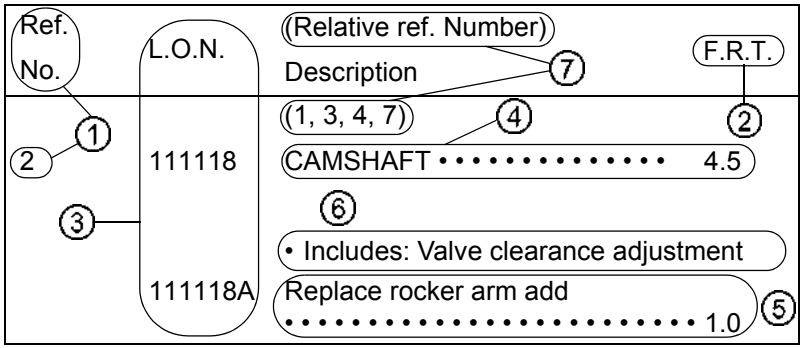

①Reference No. of the illustration of part that shows location of the replacement work.

②FRT is an abbreviation of Flat Rate Time indicating the standard service time required for the replacement.

③LON is an abbreviation of Labor Operation Number, and it is a classification of the service items by the work unit code.

The same operation code is used regardless of the models.

Standard operation is indicated with 6 digits code, and additional operation is indicated with 7 digits code.

④Indicating the camshaft replacement and FRT4.5.

⑤Indicating FRT1.0 that will be added when additional operation (replace rocker arm) is done in association with camshaft replacement.

⑥Indicating work contents that are included in the service item.

⑦Indicating a reference No. whose operation and time are the same as FRT4.5 for the camshaft.

(The application range is limited to the service items without an LON setting within a same block.)

How to refer to the service item by using the sample
(camshaft replacement)

Open to the page of the block where the camshaft's spare part illustration is shown.

Look for the camshaft illustration, and refer to the service item and FRT that agree with the reference No.

Indication mark for the listing of service items that continues to the following page

Ref. No.	L.O.N.	(Relative ref. Number) Description	F.R.T.
2	**111118**	**CAMSHAFT** • • • • • • • • • • • • • • •	**4.5**
	•	•	•
	•	•	•
+			

Mark indicated at the last line.

Indication of the block with no setting of FRT

Ref. No.	L.O.N.	(Relative ref. Number) Description	F.R.T.
NO INFORMATION • • • • • • • • • • • • • • • • • •			

- **LON code system**

1	11	1	18	A
a	b	c	d	e

a) Category code..... Engine

b) Location/function code ..... Engine upper

c) Operation code..... Replace

d) Operation sequence number (Unit code can be shown with alphabet)
..... camshaft
(No regular rule of code)

e) Additional code ..... replace rocker arm
(No regular rule of code)

1	11	1	18	A
a		c		

a) Category codes and classification

Code	Category
1	Engine
2	Transmission
3	Fuel & Exhaust
4	Frame & Body
5	Steering/Suspension
6	Electrical
7	Wheels/Brakes
8	Controls/instrument
9	-
0	-

c) Operation codes and classification

Code	Operation category
1	Replace, Removal/Installation, Change
2	Overhaul
3	Adjust, Balance
4	(Paint-related work: Top-coat)
5	Test, Inspect/diagnose, Measurment, Check
6	(Overhaul-related work: Rebore)
7	(Overhaul-related work: Reseal)
8	(Resurface)
9	(Paint-related work: Refinish)
0	Repair, Cleaning, Air bleeding

Major service items without using spare parts
(1) Removal/Installation, (2) Adjustment, (3) Inspection/ Measurement, (4) Overhaul, (5) Other work

E: Engine, F: Frame

*** OPERATIONS OTHER THAN REPLACING PARTS**

(1) Removal and installation

Set for the configuration with the parts removed from the vehicle.

	LON	DESCRIPTION	FRT
E	1101E5	**TILTING ENGINE ASSEMBLY-REMOVAL/INSTALLATION** INCLUDES: All necessary adjustment	2.0
	1111K0	**CYLINDER HEAD ASSEMBLY-REMOVAL/INSTALLATION**	1.7
	3111D6	**CARBURETOR ASSEMBLY-REMOVAL/INSTALLATION**	0.5
	1101E6	**CRANKCASE SEPARATION** INCLUDES: Engine removal and installation	4.2

(2) Adjustment

	LON	DESCRIPTION	FRT
E	3113A0	**CARBURETOR IDLE-ADJUSTMENT**	0.1
	2123A0	**CLUTCH-ADJUSTMENT** INCLUDES: Clutch lever adjustment	0.1
	6143A1	**SPARK PLUG-ADJUSTMENT/CLEANING**	0.2
	1113A0	**VALVE CLEARANCE-ADJUSTMENT** NOTE: For 1 vehicle	0.8
F	6163A0	**HEADLIGHT-AIMING**	0.1
	2133A0	**DRIVE CHAIN-ADJUSTMENT**	0.1
	3113A3	**THROTTLE OPERATION-ADJUSTMENT**	0.1

(3) Inspection, Measurement

	LON	DESCRIPTION	FRT
E	1115A0	**COMPRESSION PRESSURE-MEASUREMENT**	0.3
	3115A0	**CARBURETOR FLOAT LEVEL-MEASUREMENT**	0.8
	6145A0	**IGNITION TIMING-INSPECTION**	0.3
	2105A0	**TRANSMISSION OIL-INSPECTION** EXCLUDES: Oil change	0.1
	1135A0	**ENGINE OIL-INSPECTION** EXCLUDES: Oil change	0.1
F	7115A0	**BRAKE OPERATION-TEST**	0.1
	6105A0	**BATTERY-CHECKING OF ELECTROLYTE LEVEL & CHARGE**	0.2

(4) Overhaul

Work condition: The required Measurements, inspections, adjustments, and cleaning/washing of each part are performed, including the main body removal/installation work and the replacement of defective parts.

	LON	DESCRIPTION	FRT
E	311200	**CARBURETOR-OVERHAUL** INCLUDES: All necessary adjustment	1.0

(5) Other work

	LON	DESCRIPTION	FRT
E	1130A1	**OIL FILTER SCREEN-CLEANING** INCLUDES: Engine removal and installation	4.2
F	3120A0	**CLEANER ELEMENT-CLEANING**	0.2
	7110A0	**FRONT BRAKE-AIR BLEEDING**	0.2
	7110A1	**REAR BRAKE-AIR BLEEDING**	0.2
	1151E7	**RADIATOR COOLANT-CHANGE**	0.3

ENGINE GROUP

E-1 D 1

CYLINDER HEAD COVER

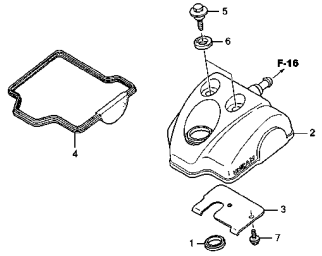

E-2 D 2

CYLINDER HEAD

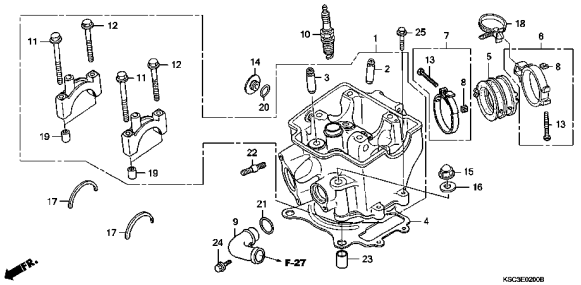

E-3 D 4

CAMSHAFT/VALVE

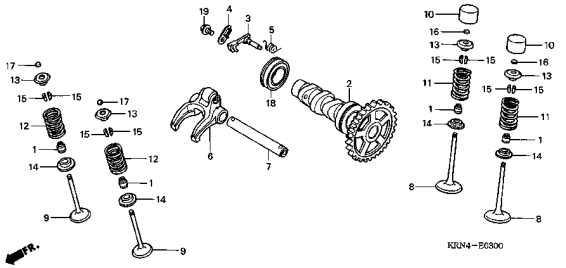

E-4 D 8

CAM CHAIN/TENSIONER

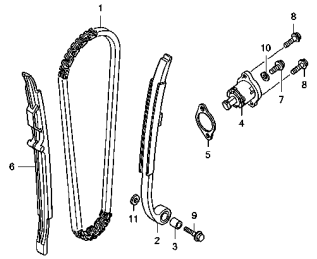

E-5 D 9

CYLINDER

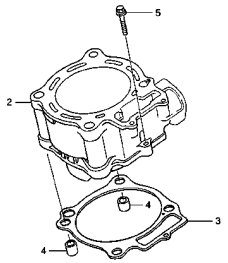

E-6 D10

R. CRANKCASE COVER

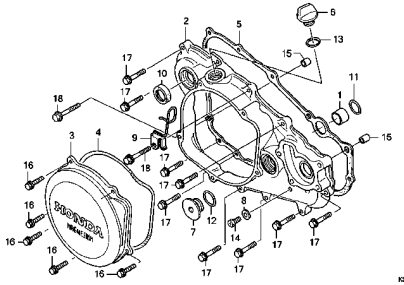

E-7 D11

CLUTCH

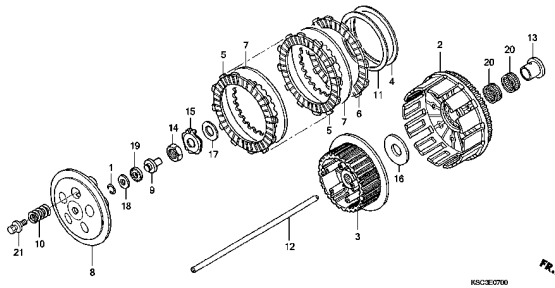

E-8 D12

OIL PUMP

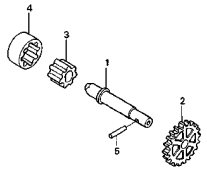

E-9 D13

WATER PUMP

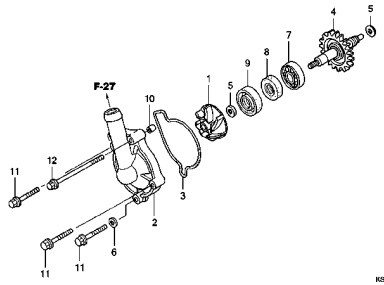

E-10 D14

L. CRANKCASE COVER

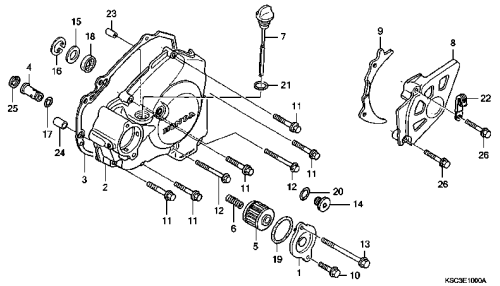

E-11 D16

GENERATOR

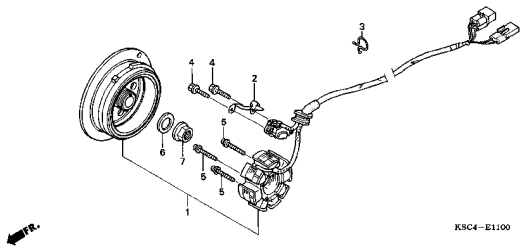

E-12 E 1

STARTING MOTOR

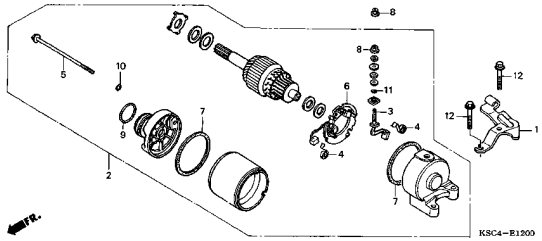

E-13 E 2

STARTING CLUTCH

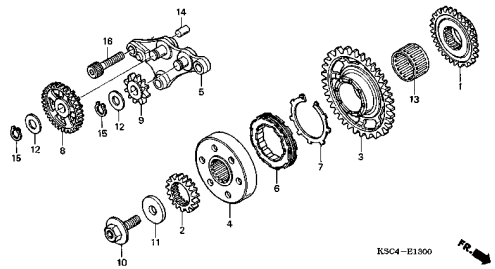

E-14 E 3

CRANKCASE

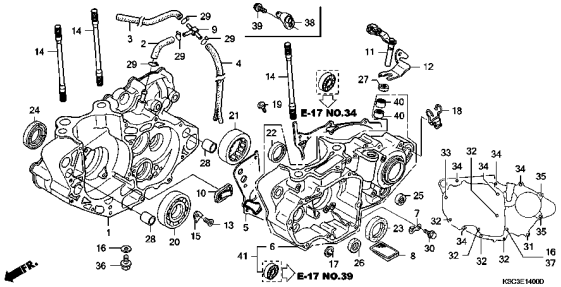

E-15 E 6

CRANKSHAFT/PISTON

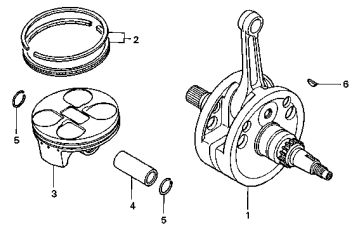

E-16 E 7

BALANCER

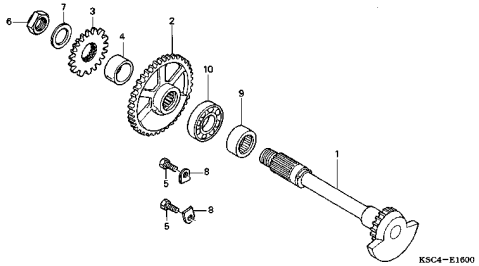

E-17 E 8

TRANSMISSION

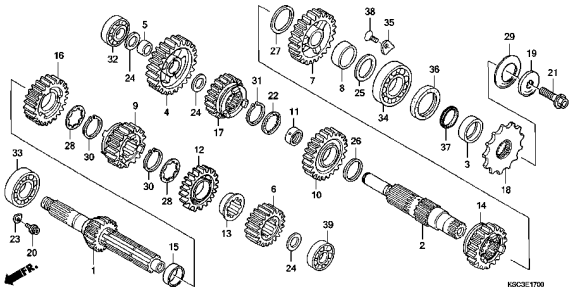

E-18 E11

GEARSHIFT DRUM

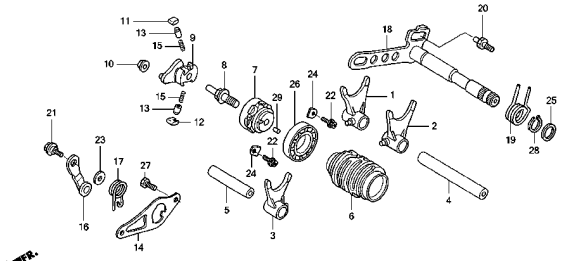

2

E-19 E13

KICK STARTER SPINDLE

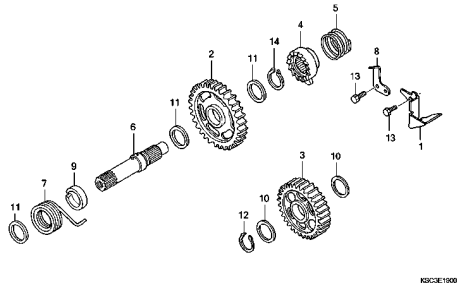

E-20 E14

CARBURETOR

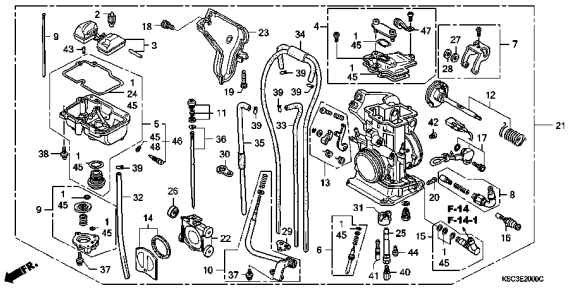

EOP-1 F 1

GASKET KIT A

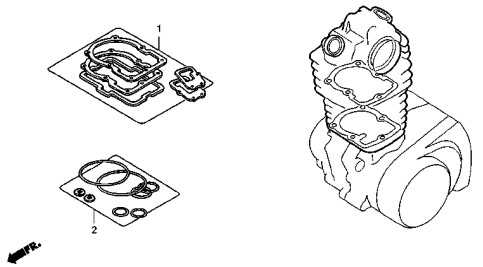

EOP-2 F 2

GASKET KIT B

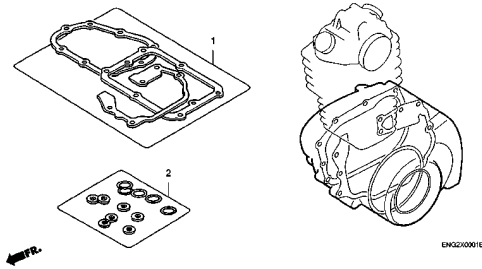

FRAME GROUP

C 3

F-1 G 1

HEADLIGHT

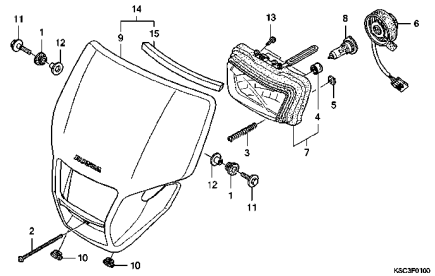

F-2 G 2

METER

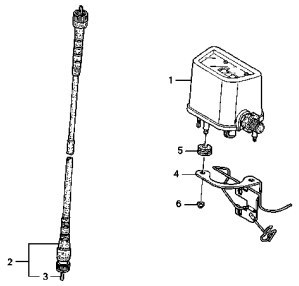

F-3 G 3

HANDLE LEVER/SWITCH/CABLE

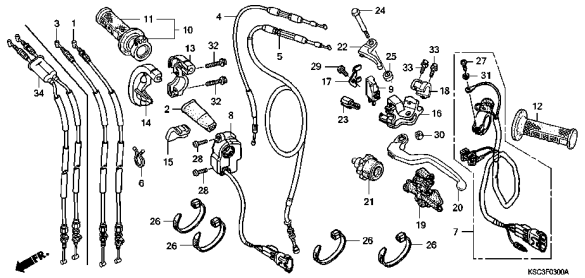

F-4 G 6

FR. BRAKE MASTER CYLINDER

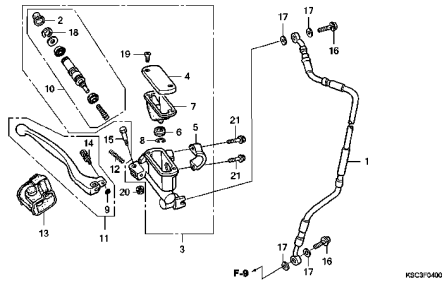

F-5 G 7

HANDLE PIPE/TOP BRIDGE

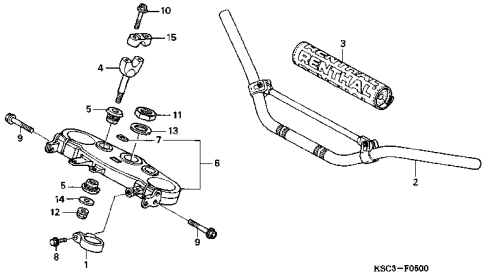

F-6 G 8

STEERING STEM

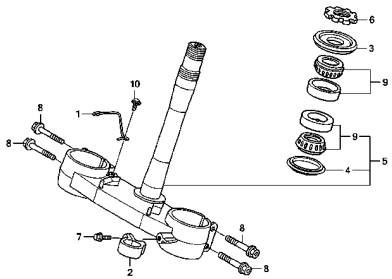

F-7 G 9

FRONT FENDER

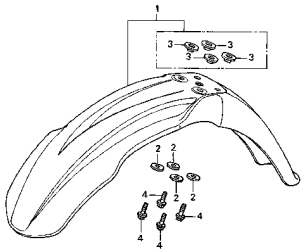

F-8 G10

FRONT FORK

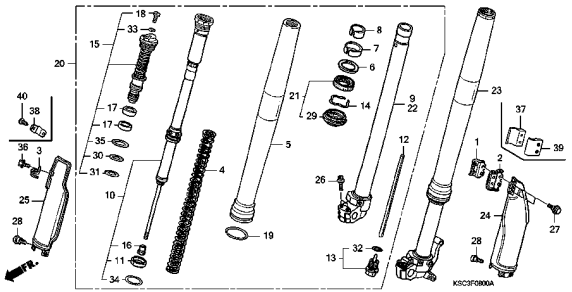

F-9 G13

FRONT BRAKE CALIPER

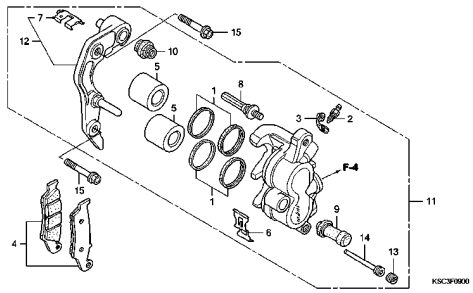

3

F-10 G14

FRONT WHEEL

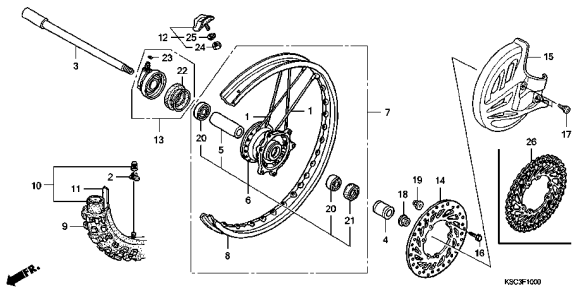

F-11 G16

REAR BRAKE CALIPER

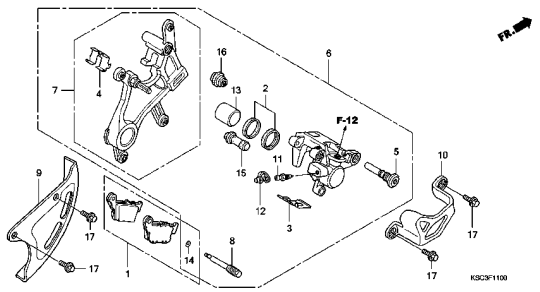

F-12 H 2

RR. BRAKE MASTER CYLINDER

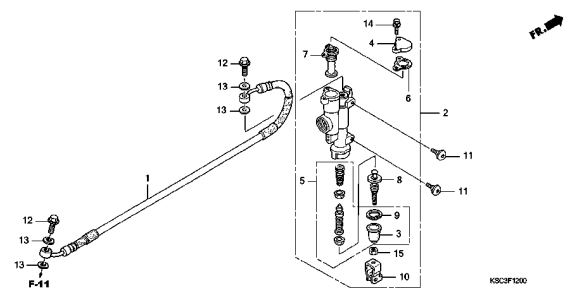

F-13 H 4

REAR WHEEL

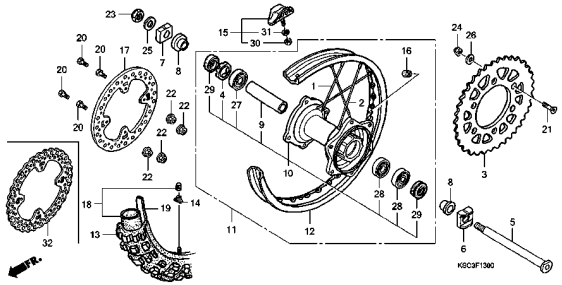

F-14 H 6

FUEL TANK (CRF250X4/5/6/7)

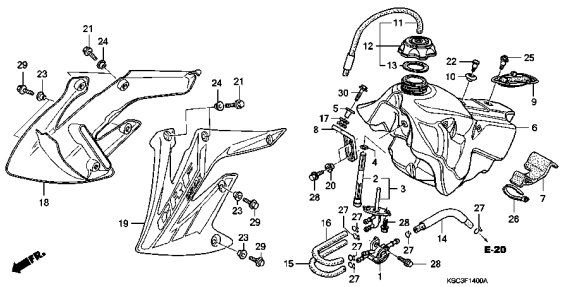

F-14-1 H 8

FUEL TANK (CRF250X8)

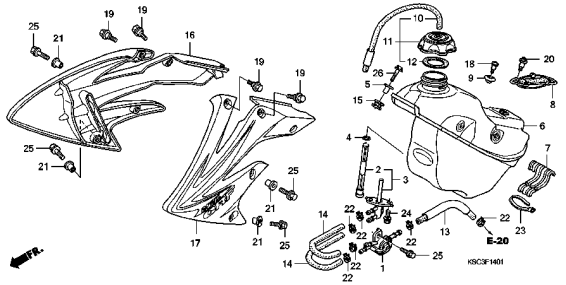

F-15 H10

SEAT/SIDE COVER

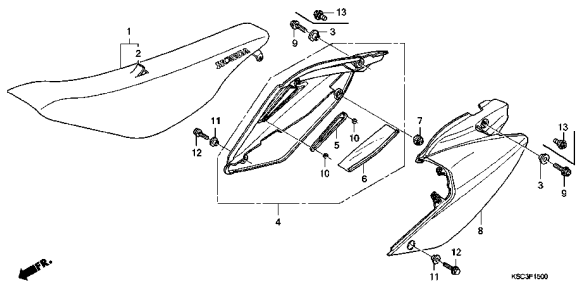

F-16 H11

AIR CLEANER

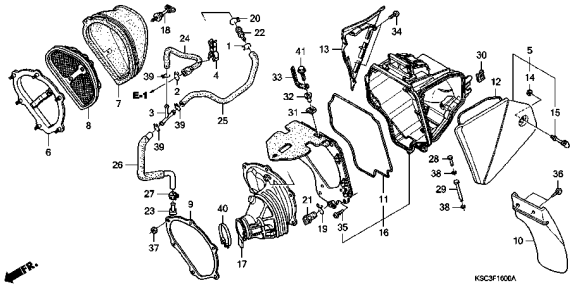

F-17 H13

EXHAUST MUFFLER

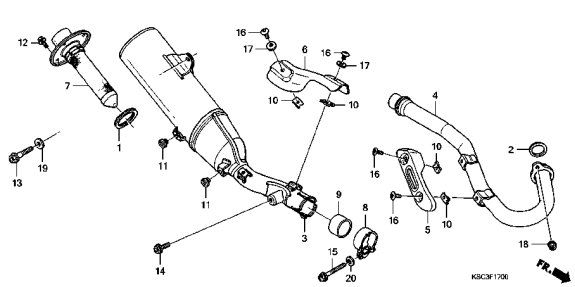

F-18 H14

PEDAL/KICK STARTER ARM

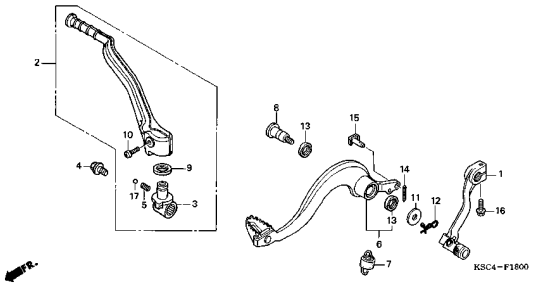

F-19 H15

STEP

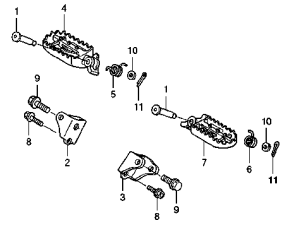

F-20 H16

STAND

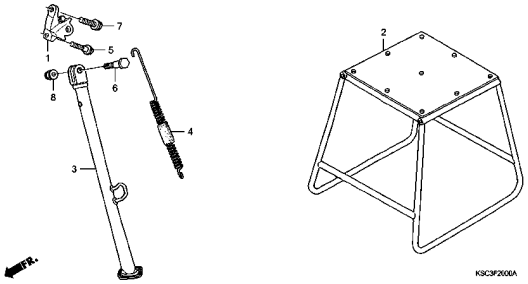

F-21 I 1

SWINGARM

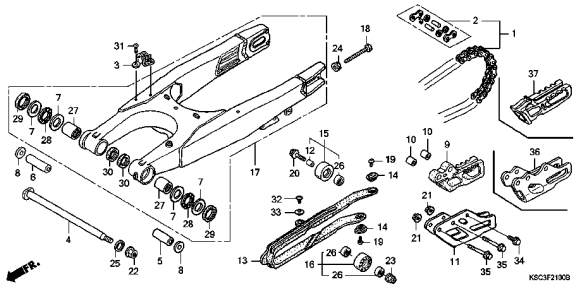

F-22 I 3

REAR CUSHION

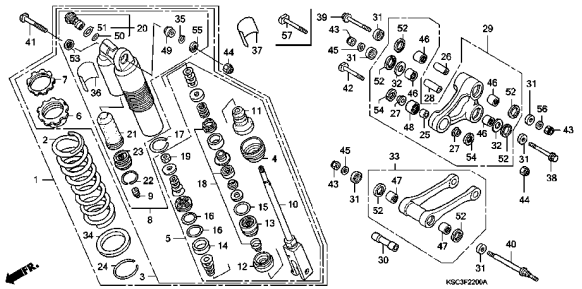

F-23 I 6

REAR FENDER

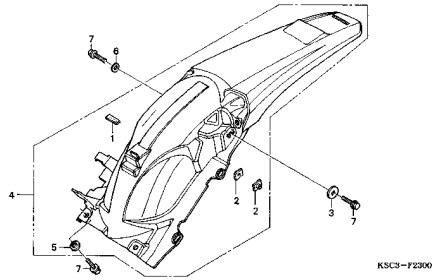

F-24 I 7

TAILLIGHT

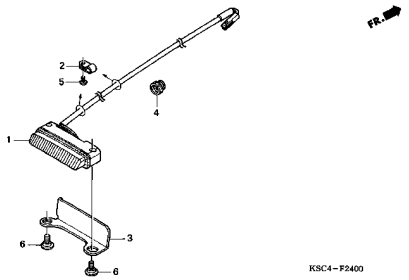

F-25 I 8

BATTERY

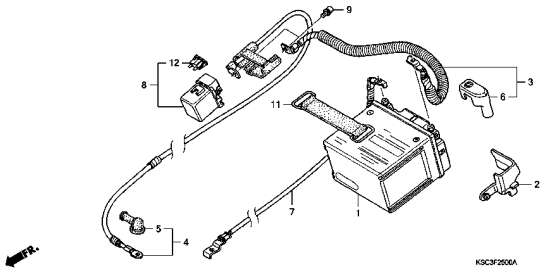

F-26 I 9

WIRE HARNESS

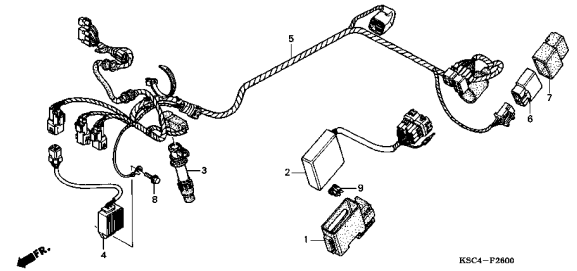

F-27 I10

RADIATOR

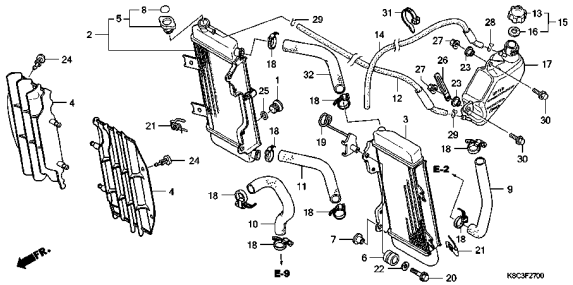

F-28 I12

FRAME BODY

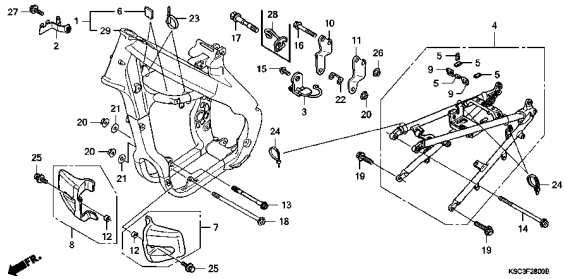

F-29 I14

TOOLS

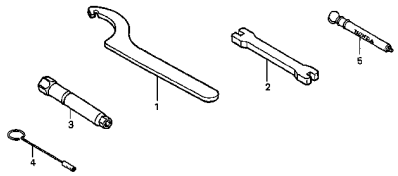

F-30 I15

CAUTION LABEL

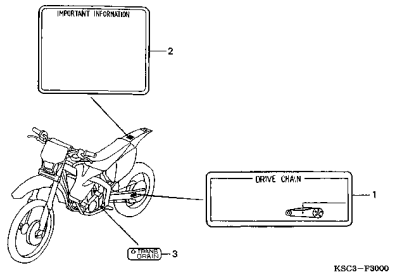

F-31 I16

MARK (CRF250X4/5/6/7)

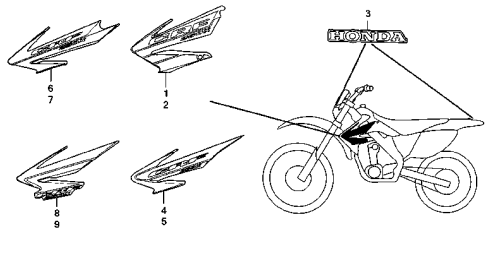

F-31-1 J 1

MARK (CRF250X8)

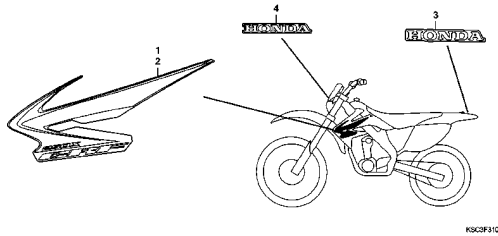

FOP-1 J 2

COOLING FAN

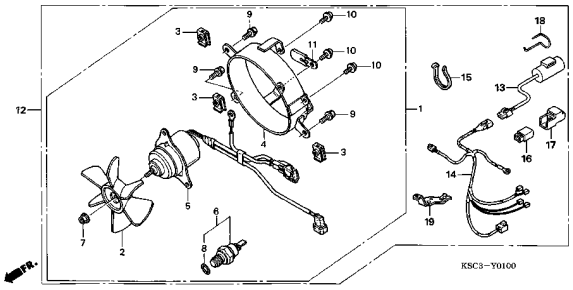

E-1 CYLINDER HEAD COVER

D 1

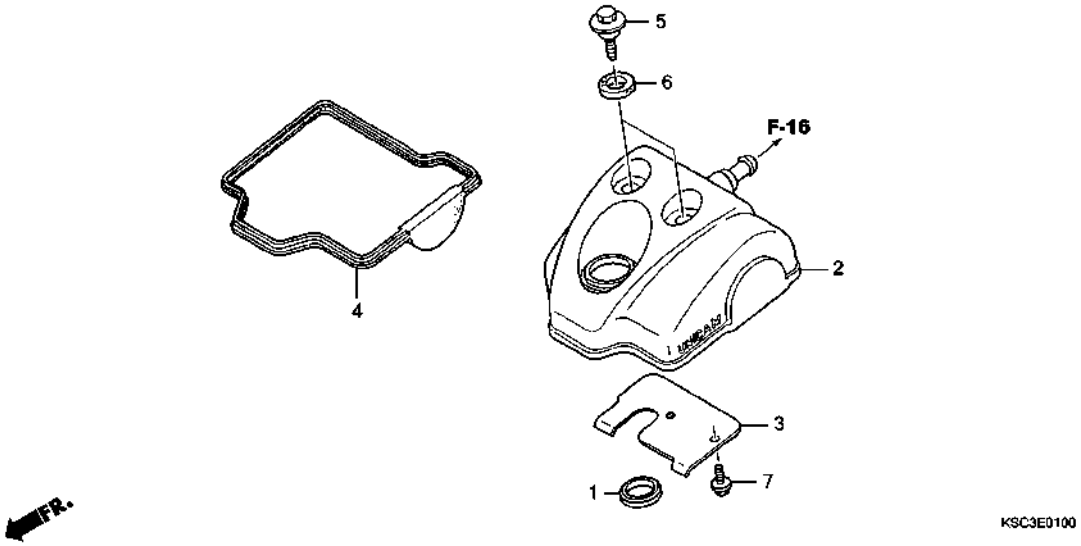

Ref. No.	L.O.N.	(Relative ref. Number) Description	F.R.T.
2	1111C4	COVER, CYLINDER HEAD	0.3
4	1111D2	GASKET, CYLINDER HEAD COVER ..	0.3

Ref. No.	Part No.	Description	Reqd. QTY CRF250X 4	5	6	7	8	Serial No.	Parts catalogue code
1	12226-MEB-670	SEAL, RING	1	1	1	1	1		
2	12310-KRN-670	COVER COMP., CYLINDER HEAD ..	1	1	1	1	1		
3	12316-KRN-670	PLATE, BREATHER	1	1	1	1	1		
4	12391-KRN-670	GASKET, HEAD COVER	1	1	1	1	1		
5	90017-MY9-790	BOLT, HEAD COVER	2	2	2	2	2		
6	90543-MV9-670	RUBBER, MOUNTING	2	2	2	2	2		
7	96300-06012-00	BOLT, FLANGE, 6X12	2	2	2	2	2		

2

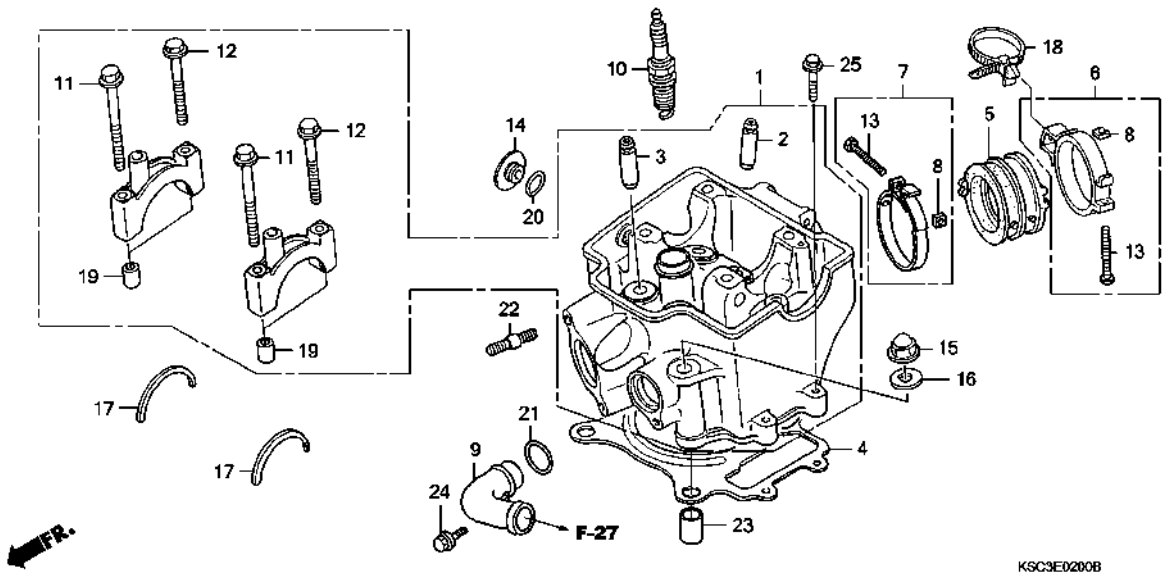

Ref. No.	L.O.N.	(Relative ref. Number) Description	F.R.T.
1	111106	HEAD, CYLINDER ····· .INCLUDES: Valve adjust and reface	3.1
2	1111L9	GUIDE, INTAKE VALVE(ONE) ····· .INCLUDES: Reaming .INCLUDES: Valve adjust and reface	2.6
	1111L9A	.Replace all intake valve guide add ·····	0.3
	1111M9	GUIDE, VALVE :FOR 1 VEHICLE ·· .INCLUDES: Reaming .INCLUDES: Valve adjust and reface	3.5
3	1111MO	GUIDE, EXHAUST VALVE(ONE) ···· .INCLUDES: Reaming .INCLUDES: Valve adjust and reface	2.6
	1111MOA	.Replace all exhaust valve guide add ·····	0.3
	1111M9	GUIDE, VALVE :FOR 1 VEHICLE ·· .INCLUDES: Reaming .INCLUDES: Valve adjust and reface	3.5
4	111115	GASKET, CYLINDER HEAD ·····	1.7

Ref. No.	Part No.	Description	Reqd. QTY CRF250X 4	5	6	7	8	Serial No.	Parts catalogue code
1	12010-KRN-672	HEAD ASSY., CYLINDER ·····	1	-	-	-	-	-------- 5013824	
			-	1	-	-	-	-------- --------	DK
			-	1	-	-	-	-------- 5013824	ED
	12010-KRN-673	·····	1	-	-	-	-	5013825	
			-	1	-	-	-	5013825 --------	ED
	12010-KRN-674	·····	-	-	1	-	-		
	12010-KSC-D10	·····	-	-	-	1	1		
2	12204-KRN-P00	GUIDE, IN. VALVE (O.S.) ·····	2	2	2	2	2		
3	12205-KRN-P00	GUIDE, EX. VALVE (O.S.) ·····	2	2	2	2	2		
4	12251-KRN-671	GASKET, CYLINDER HEAD ·····	1	1	1	-	-		
	12251-KRN-731	·····	-	-	-	1	1		
5	16211-KRN-670	INSULATOR, CARBURETOR ·····	1	1	1	1	1		
6	16218-KSC-670	BAND, INSULATOR ·····	1	1	1	1	1		
7	16218-MCJ-000	BAND B, INSULATOR ·····	1	1	1	1	1		
8	16222-MV4-300	NUT, SQUARE, 5MM ·····	2	2	2	2	2		
9	19523-MEB-670	PIPE, WATER ·····	1	1	1	-	-		
	19523-KRN-730	JOINT, WATER ·····	-	-	-	1	1		
10	31911-MBW-E11	PLUG, SPARK (IMR8C-9H)(NGK) ·	1	1	1	1	1		
	31921-MBW-E12	PLUG, SPARK (VUH24D)(DENSO) ·	1	1	1	1	1		
	31912-MBW-E11	PLUG, SPARK (IMR9C-9H)(NGK) ·	(1)	(1)	(1)	(1)	(1)		
	31922-MBW-E12	PLUG, SPARK (VUH27D)(DENSO) ·	(1)	(1)	(1)	(1)	(1)		
11	90001-KRN-670	BOLT, FLANGE, 7X60 ·····	2	2	2	2	2		
12	90002-KRN-670	BOLT, FLANGE, 7X50 ·····	2	2	2	2	2		
13	90005-MCJ-000	BOLT, RECESSED, 5X28 ·····	2	2	2	2	2		
14	90084-MEN-670	CAP, 14MM ·····	1	1	1	1	1		
15	90232-MB6-680	NUT, CAP, 9MM ·····	4	4	4	4	4		

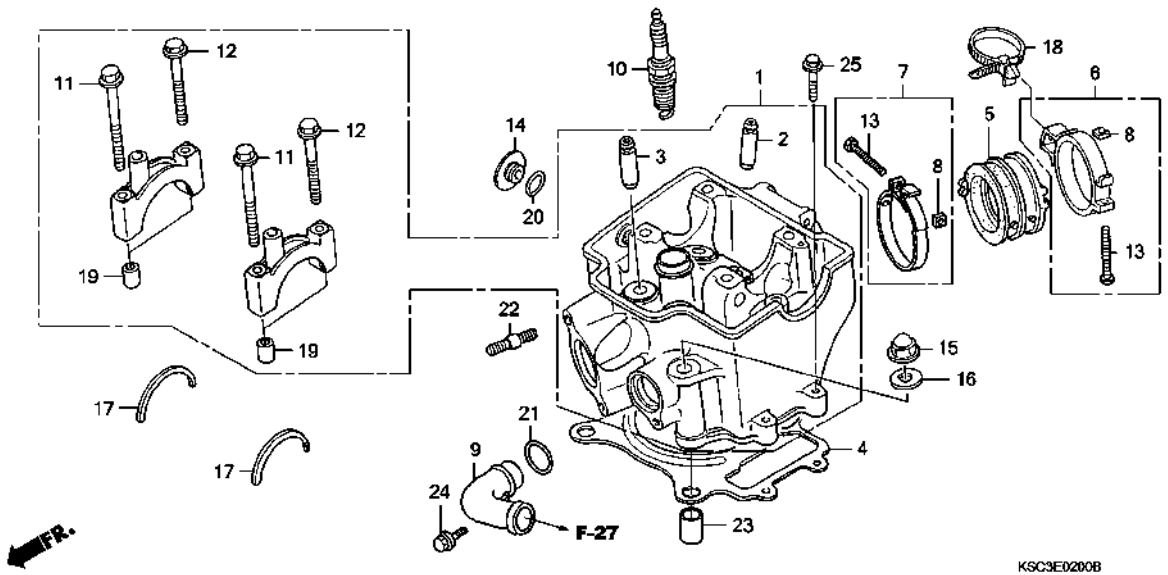

Ref. No.	L.O.N.	(Relative ref. Number) Description	F.R.T.
5	311131	INSULATOR, THROTTLE BODY/ CARBURETOR ----------	0.5
9	1141F4	PIPE, WATER OUTLET :FRONT ----	0.4
10	614130	PLUG, SPARK ----------	0.2

Ref. No.	Part No.	Description	Reqd. QTY CRF250X 4	5	6	7	8	Serial No.	Parts catalogue code
16	90401-KRN-670	WASHER, PLAIN, 9MM ----------	4	4	4	4	4		
17	90446-KRN-670	WASHER, CAMSHAFT THRUST -----	2	2	2	2	2		
18	90672-SA0-003	STRAP, CABLE, 118MM(BLACK) --	1	1	1	1	1		
19	90701-MR7-000	DOWEL PIN, 9X14 ----------	4	4	4	4	4		
20	91303-377-000	O-RING, 13.8X2.5 ----------	1	1	1	1	1		
21	91312-KE7-003	O-RING, 19X3(NOK) ----------	1	1	1	1	1		
22	92900-08022-0B	BOLT, STUD, 8X22 ----------	2	2	2	2	2		
23	94301-12200	DOWEL PIN, 12X20 ----------	2	2	2	2	2		
24	96001-06014-00	BOLT, FLANGE, 6X14 ----------	1	1	1	-	-		
	96001-06020-00	BOLT, FLANGE, 6X20 ----------	-	-	-	1	1		
25	96001-06028-00	BOLT, FLANGE, 6X28 ----------	2	2	2	2	2		

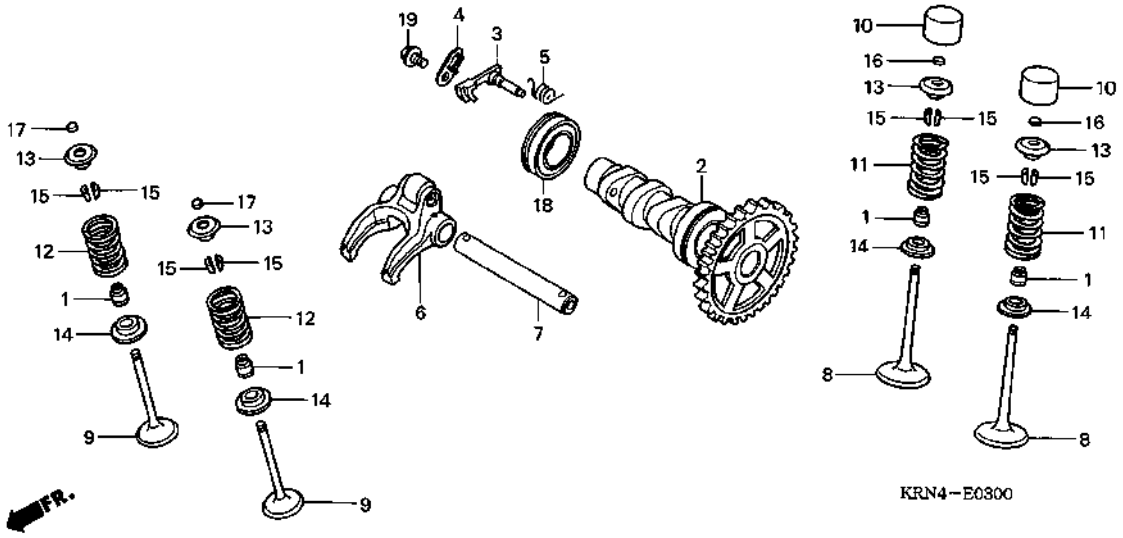

Ref. No.	L.O.N.	(Relative ref. Number) Description	F.R.T.
2	111118	CAMSHAFT	1.1
		.INCLUDES: Valve adjustment	
3	1111T7	WEIGHT, DECOMPRESSION	0.7
6	1111K9	ARM, EXHAUST VALVE ROCKER(ONE)	0.8
		.INCLUDES: Valve adjustment	
8	1111NO	VALVE, INTAKE(ONE)	2.1
		.INCLUDES: Refacing	
	1111NOA	.Replace all intake valve add	0.2
	1111PO	VALVE :FOR 1 VEHICLE	2.7
		.INCLUDES: Refacing	
9	1111N1	VALVE, EXHAUST(ONE)	2.1
		.INCLUDES: Refacing	
	1111N1A	.Replace all exhaust valve add	0.2
	1111PO	VALVE :FOR 1 VEHICLE	2.7
		.INCLUDES: Refacing	
11		(1,14,15)	
	1111P2	SPRING AND/OR STEM SEAL, INTAKE VALVE(ONE)	1.9
	1111P2A	.Replace all intake spring add	0.1
	1111Q2	SPRING AND/OR STEM SEAL, VALVE :FOR 1 VEHICLE	2.2
12		(1,14,15)	
	1111P3	SPRING AND/OR STEM SEAL,	
+		EXHAUST VALVE(ONE)	1.9

Ref. No.	Part No.	Description	Reqd. QTY CRF250X 4	5	6	7	8	Serial No.	Parts catalogue code
1	12209-GB4-681	SEAL, VALVE STEM (NOK)	4	4	4	4	4		
2	14100-KSC-670	CAMSHAFT COMP.	1	1	1	1	1		
3	14102-KRN-670	WEIGHT, DECOMPRESSION	1	1	1	1	1		
4	14105-KRN-670	PLATE, WEIGHT SETTING	1	1	1	1	1		
5	14106-KRN-670	SPRING, DECOMPRESSION	1	1	1	-	-		
	14106-KRN-A00	.....	-	-	-	1	1		
6	14440-KRN-670	ARM COMP., EX. ROCKER	1	1	1	1	1		
7	14451-KSC-670	SHAFT, EX. ROCKER ARM	1	1	-	-	-		
	14451-KSC-671	.....	-	-	1	1	1		
8	14711-KRN-670	VALVE, IN.	2	2	2	2	2		
9	14721-KRN-670	VALVE, EX.	2	2	2	2	2		
10	14731-KRN-670	LIFTER, VALVE	2	2	2	-	-		
	14731-KRN-A00	.....	-	-	-	2	2		
11	14751-KRN-670	SPRING, IN. VALVE	2	2	2	2	2		
12	14761-KRN-670	SPRING, EX. VALVE	2	2	2	-	-		
	14761-KRN-671	.....	-	-	-	2	2		
13	14771-KRN-670	RETAINER, VALVE SPRING	4	4	4	-	-		
	14771-KRN-A00	.....	-	-	-	4	-		
	14772-KRN-A10	.....	-	-	-	-	4		
14	14775-KRN-670	SEAT, VALVE SPRING	4	4	4	4	4		
15	14781-MAT-000	COTTER, VALVE	8	8	8	8	8		
16	14901-KT7-013	SHIM, TAPPET (1.200)	2	2	2	2	2		
	14902-KT7-013	SHIM, TAPPET (1.225)	2	2	2	2	2		
	14903-KT7-013	SHIM, TAPPET (1.250)	2	2	2	2	2		
	14904-KT7-013	SHIM, TAPPET (1.275)	2	2	2	2	2		
	14905-KT7-013	SHIM, TAPPET (1.300)	2	2	2	2	2		

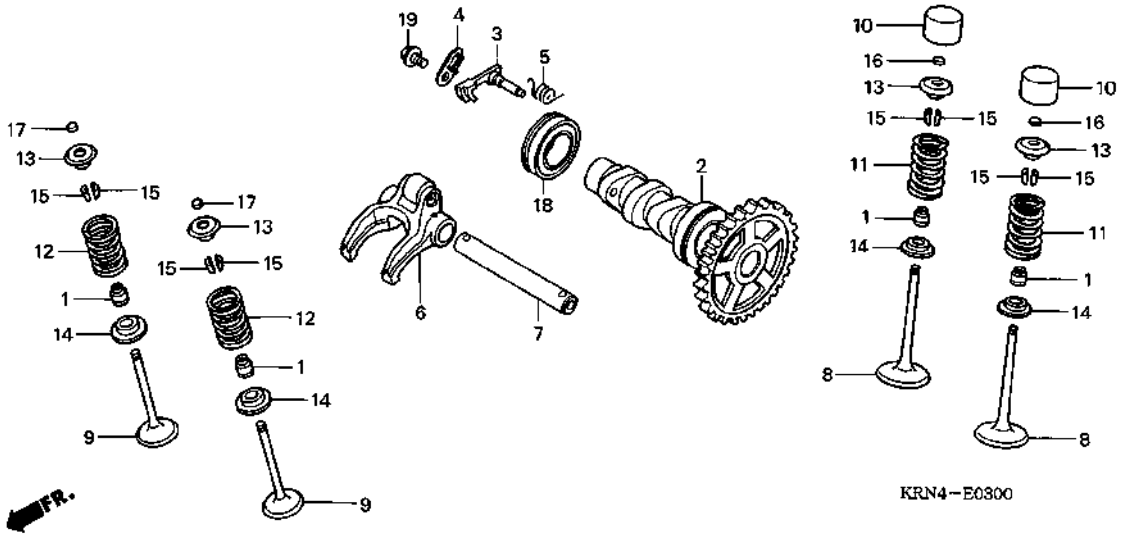

Ref. No.	L.O.N.	(Relative ref. Number) Description	F.R.T.
+12	1111P3A	.Replace all exhaust spring add ----------	0.1
	1111Q2	SPRING AND/OR STEM SEAL, VALVE :FOR 1 VEHICLE --------	2.2
18	1111Q5	BEARING, CAMSHAFT ----------	1.0

Ref. No.	Part No.	Description	Reqd. QTY CRF250X 4	5	6	7	8	Serial No.	Parts catalogue code
16)	14906-KT7-013	SHIM, TAPPET (1.325) --------	2	2	2	2	2		
	14907-KT7-013	SHIM, TAPPET (1.350) --------	2	2	2	2	2		
	14908-KT7-013	SHIM, TAPPET (1.375) --------	2	2	2	2	2		
	14909-KT7-013	SHIM, TAPPET (1.400) --------	2	2	2	2	2		
	14910-KT7-013	SHIM, TAPPET (1.425) --------	2	2	2	2	2		
	14911-KT7-013	SHIM, TAPPET (1.450) --------	2	2	2	2	2		
	14912-KT7-013	SHIM, TAPPET (1.475) --------	2	2	2	2	2		
	14913-KT7-013	SHIM, TAPPET (1.500) --------	2	2	2	2	2		
	14914-KT7-013	SHIM, TAPPET (1.525) --------	2	2	2	2	2		
	14915-KT7-013	SHIM, TAPPET (1.550) --------	2	2	2	2	2		
	14916-KT7-013	SHIM, TAPPET (1.575) --------	2	2	2	2	2		
	14917-KT7-013	SHIM, TAPPET (1.600) --------	2	2	2	2	2		
	14918-KT7-013	SHIM, TAPPET (1.625) --------	2	2	2	2	2		
	14919-KT7-013	SHIM, TAPPET (1.650) --------	2	2	2	2	2		
	14920-KT7-013	SHIM, TAPPET (1.675) --------	2	2	2	2	2		
	14921-KT7-013	SHIM, TAPPET (1.700) --------	2	2	2	2	2		
	14922-KT7-013	SHIM, TAPPET (1.725) --------	2	2	2	2	2		
	14923-KT7-013	SHIM, TAPPET (1.750) --------	2	2	2	2	2		
	14924-KT7-013	SHIM, TAPPET (1.775) --------	2	2	2	2	2		
	14925-KT7-013	SHIM, TAPPET (1.800) --------	2	2	2	2	2		
	14926-KT7-013	SHIM, TAPPET (1.825) --------	2	2	2	2	2		
	14927-KT7-013	SHIM, TAPPET (1.850) --------	2	2	2	2	2		
	14928-KT7-013	SHIM, TAPPET (1.875) --------	2	2	2	2	2		
	14929-KT7-013	SHIM, TAPPET (1.900) --------	2	2	2	2	2		
	14930-KT7-013	SHIM, TAPPET (1.925) --------	2	2	2	2	2		
	14931-KT7-013	SHIM, TAPPET (1.950) --------	2	2	2	2	2		
	14932-KT7-013	SHIM, TAPPET (1.975) --------	2	2	2	2	2		
	14933-KT7-013	SHIM, TAPPET (2.000) --------	2	2	2	2	2		
	14934-KT7-013	SHIM, TAPPET (2.025) --------	2	2	2	2	2		

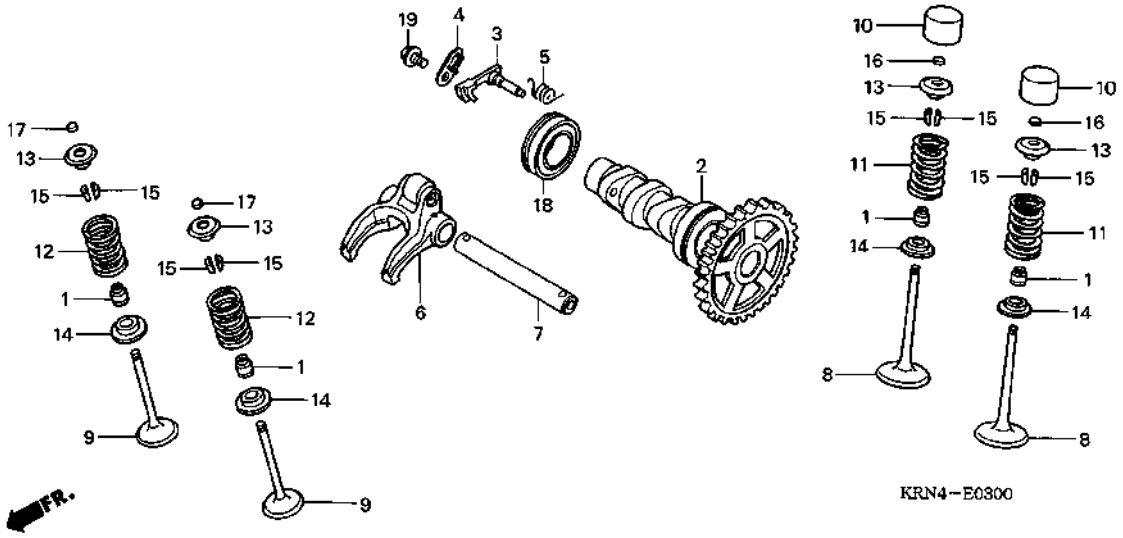

Ref. No.	Part No.	Description	Reqd. QTY CRF250X 4	5	6	7	8	Serial No.	Parts catalogue code
16)	14935-KT7-013	SHIM, TAPPET (2.050)	2	2	2	2	2		
	14936-KT7-013	SHIM, TAPPET (2.075)	2	2	2	2	2		
	14937-KT7-013	SHIM, TAPPET (2.100)	2	2	2	2	2		
	14938-KT7-013	SHIM, TAPPET (2.125)	2	2	2	2	2		
	14939-KT7-013	SHIM, TAPPET (2.150)	2	2	2	2	2		
	14940-KT7-013	SHIM, TAPPET (2.175)	2	2	2	2	2		
	14941-KT7-013	SHIM, TAPPET (2.200)	2	2	2	2	2		
	14942-KT7-013	SHIM, TAPPET (2.225)	2	2	2	2	2		
	14943-KT7-013	SHIM, TAPPET (2.250)	2	2	2	2	2		
	14944-KT7-013	SHIM, TAPPET (2.275)	2	2	2	2	2		
	14945-KT7-013	SHIM, TAPPET (2.300)	2	2	2	2	2		
	14946-KT7-013	SHIM, TAPPET (2.325)	2	2	2	2	2		
	14947-KT7-013	SHIM, TAPPET (2.350)	2	2	2	2	2		
	14948-KT7-013	SHIM, TAPPET (2.375)	2	2	2	2	2		
	14949-KT7-013	SHIM, TAPPET (2.400)	2	2	2	2	2		
	14950-KT7-013	SHIM, TAPPET (2.425)	2	2	2	2	2		
	14951-KT7-013	SHIM, TAPPET (2.450)	2	2	2	2	2		
17	14901-KT7-013	SHIM, TAPPET (1.200)	2	2	2	2	2		
	14902-KT7-013	SHIM, TAPPET (1.225)	2	2	2	2	2		
	14903-KT7-013	SHIM, TAPPET (1.250)	2	2	2	2	2		
	14904-KT7-013	SHIM, TAPPET (1.275)	2	2	2	2	2		
	14905-KT7-013	SHIM, TAPPET (1.300)	2	2	2	2	2		
	14906-KT7-013	SHIM, TAPPET (1.325)	2	2	2	2	2		
	14907-KT7-013	SHIM, TAPPET (1.350)	2	2	2	2	2		
	14908-KT7-013	SHIM, TAPPET (1.375)	2	2	2	2	2		
	14909-KT7-013	SHIM, TAPPET (1.400)	2	2	2	2	2		
	14910-KT7-013	SHIM, TAPPET (1.425)	2	2	2	2	2		
	14911-KT7-013	SHIM, TAPPET (1.450)	2	2	2	2	2		
	14912-KT7-013	SHIM, TAPPET (1.475)	2	2	2	2	2		

Ref. No.	Part No.	Description	Reqd. QTY CRF250X 4	5	6	7	8	Serial No.	Parts catalogue code
17)	14913-KT7-013	SHIM, TAPPET (1.500)	2	2	2	2	2		
	14914-KT7-013	SHIM, TAPPET (1.525)	2	2	2	2	2		
	14915-KT7-013	SHIM, TAPPET (1.550)	2	2	2	2	2		
	14916-KT7-013	SHIM, TAPPET (1.575)	2	2	2	2	2		
	14917-KT7-013	SHIM, TAPPET (1.600)	2	2	2	2	2		
	14918-KT7-013	SHIM, TAPPET (1.625)	2	2	2	2	2		
	14919-KT7-013	SHIM, TAPPET (1.650)	2	2	2	2	2		
	14920-KT7-013	SHIM, TAPPET (1.675)	2	2	2	2	2		
	14921-KT7-013	SHIM, TAPPET (1.700)	2	2	2	2	2		
	14922-KT7-013	SHIM, TAPPET (1.725)	2	2	2	2	2		
	14923-KT7-013	SHIM, TAPPET (1.750)	2	2	2	2	2		
	14924-KT7-013	SHIM, TAPPET (1.775)	2	2	2	2	2		
	14925-KT7-013	SHIM, TAPPET (1.800)	2	2	2	2	2		
	14926-KT7-013	SHIM, TAPPET (1.825)	2	2	2	2	2		
	14927-KT7-013	SHIM, TAPPET (1.850)	2	2	2	2	2		
	14928-KT7-013	SHIM, TAPPET (1.875)	2	2	2	2	2		
	14929-KT7-013	SHIM, TAPPET (1.900)	2	2	2	2	2		
	14930-KT7-013	SHIM, TAPPET (1.925)	2	2	2	2	2		
	14931-KT7-013	SHIM, TAPPET (1.950)	2	2	2	2	2		
	14932-KT7-013	SHIM, TAPPET (1.975)	2	2	2	2	2		
	14933-KT7-013	SHIM, TAPPET (2.000)	2	2	2	2	2		
	14934-KT7-013	SHIM, TAPPET (2.025)	2	2	2	2	2		
	14935-KT7-013	SHIM, TAPPET (2.050)	2	2	2	2	2		
	14936-KT7-013	SHIM, TAPPET (2.075)	2	2	2	2	2		
	14937-KT7-013	SHIM, TAPPET (2.100)	2	2	2	2	2		
	14938-KT7-013	SHIM, TAPPET (2.125)	2	2	2	2	2		
	14939-KT7-013	SHIM, TAPPET (2.150)	2	2	2	2	2		
	14940-KT7-013	SHIM, TAPPET (2.175)	2	2	2	2	2		
	14941-KT7-013	SHIM, TAPPET (2.200)	2	2	2	2	2		
	14942-KT7-013	SHIM, TAPPET (2.225)	2	2	2	2	2		
	14943-KT7-013	SHIM, TAPPET (2.250)	2	2	2	2	2		
	14944-KT7-013	SHIM, TAPPET (2.275)	2	2	2	2	2		
	14945-KT7-013	SHIM, TAPPET (2.300)	2	2	2	2	2		
	14946-KT7-013	SHIM, TAPPET (2.325)	2	2	2	2	2		
	14947-KT7-013	SHIM, TAPPET (2.350)	2	2	2	2	2		
	14948-KT7-013	SHIM, TAPPET (2.375)	2	2	2	2	2		
	14949-KT7-013	SHIM, TAPPET (2.400)	2	2	2	2	2		
	14950-KT7-013	SHIM, TAPPET (2.425)	2	2	2	2	2		
	14951-KT7-013	SHIM, TAPPET (2.450)	2	2	2	2	2		
	14952-KT7-013	SHIM, TAPPET (2.475)	2	2	2	2	2		
	14953-KT7-013	SHIM, TAPPET (2.500)	2	2	2	2	2		
	14954-KT7-013	SHIM, TAPPET (2.525)	2	2	2	2	2		
	14955-KT7-013	SHIM, TAPPET (2.550)	2	2	2	2	2		
	14956-KT7-013	SHIM, TAPPET (2.575)	2	2	2	2	2		
	14957-KT7-013	SHIM, TAPPET (2.600)	2	2	2	2	2		
	14958-KT7-013	SHIM, TAPPET (2.625)	2	2	2	2	2		
	14959-KT7-013	SHIM, TAPPET (2.650)	2	2	2	2	2		
	14960-KT7-013	SHIM, TAPPET (2.675)	2	2	2	2	2		
	14961-KT7-013	SHIM, TAPPET (2.700)	2	2	2	2	2		
	14962-KT7-013	SHIM, TAPPET (2.725)	2	2	2	2	2		
	14963-KT7-013	SHIM, TAPPET (2.750)	2	2	2	2	2		
	14964-KT7-013	SHIM, TAPPET (2.775)	2	2	2	2	2		
	14965-KT7-013	SHIM, TAPPET (2.800)	2	2	2	2	2		
	14966-KT7-013	SHIM, TAPPET (2.825)	2	2	2	2	2		
	14967-KT7-013	SHIM, TAPPET (2.850)	2	2	2	2	2		
	14968-KT7-013	SHIM, TAPPET (2.875)	2	2	2	2	2		
	14969-KT7-013	SHIM, TAPPET (2.900)	2	2	2	2	2		
18	91007-KRN-671	BEARING, BALL RADIAL, 6905 ..	1	1	1	1	1		
19	96001-06012-00	BOLT, FLANGE, 6X12	1	1	1	1	1		

CAM CHAIN/TENSIONER

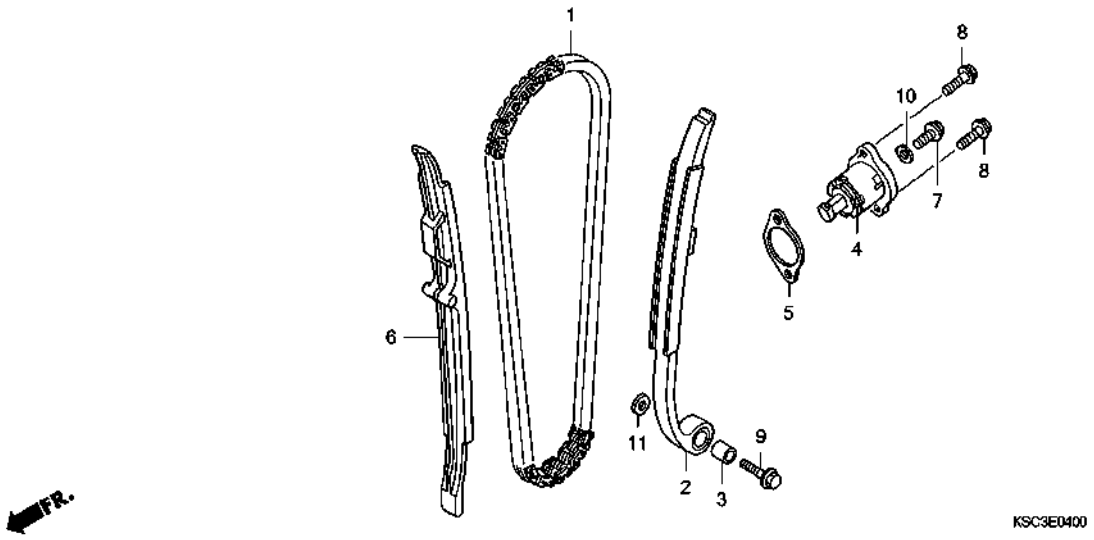

Ref. No.	L.O.N.	(Relative ref. Number) Description	F.R.T.
1	110140	CHAIN, CAM ----------	1.1
2	111130	TENSIONER, CAM CHAIN ----------	1.1
4		(5)	
	111133	LIFTER, TENSIONER ----------	0.2
6	111139	GUIDE, CAM CHAIN ----------	1.7

Ref. No.	Part No.	Description	Reqd. QTY CRF250X 4	5	6	7	8	Serial No.	Parts catalogue code
1	14401-KRN-671	CHAIN, CAM (104L)(BORG WARNER)	1	1	1	1	1		
2	14510-KRN-670	TENSIONER COMP., CAM CHAIN **	1	1	1	1	1		
3	14515-KF0-000	COLLAR, TENSIONER, 6X9 ------	1	1	1	1	1		
4	14520-KRN-670	LIFTER ASSY., TENSIONER -----	1	-	-	-	-	-------- 5004902	
	14520-KRN-671	----------	1	-	-	-	-	5004903	
			-	1	1	1	1		
5	14560-MEN-671	GASKET, TENSIONER LIFTER ----	1	1	1	1	1		
6	14620-KRN-670	GUIDE, CAM CHAIN ----------	1	1	1	1	1		
7	90004-GHB-600	BOLT, FLANGE, 6X10(NSHF) ----	1	1	1	1	1		
8	90004-GHB-630	BOLT, FLANGE, 6X16(NSHF) ----	2	2	2	2	2		
9	90088-MEB-670	BOLT, FLANGE, 6X25 ----------	1	1	1	1	1		
10	90442-397-000	WASHER, SEALING, 6MM --------	1	1	1	1	1		
11	90482-567-000	WASHER, SPECIAL, 6MM --------	1	1	1	1	1		

CYLINDER

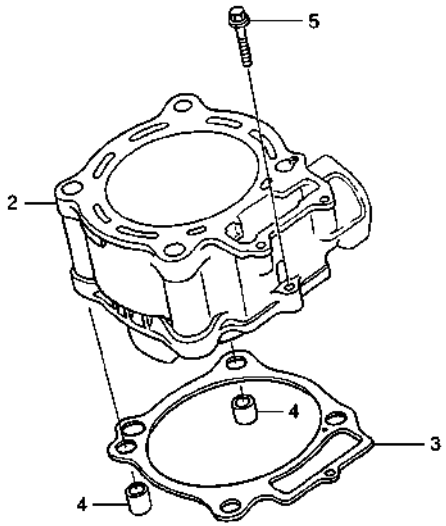

Ref. No.	L.O.N.	(Relative ref. Number) Description	F.R.T.
2	1111A5	CYLINDER	2.1
3	111102	GASKET, CYLINDER	2.0

Ref. No.	Part No.	Description	Reqd. QTY CRF250X 4	5	6	7	8	Serial No.		Parts catalogue code
2	12100-KRN-670	CYLINDER	1	-	-	-	-	---------	5011470	
	12100-KRN-671		1	-	-	-	-	5011471	5013824	
			-	1	-	-	-	---------	5013824	ED
			-	1	-	-	-	---------	5103681	DK
	12100-KRN-672		-	1	-	-	-	5103682	---------	DK
	12100-KRN-730		1	-	-	-	-	5013825		
			-	1	-	-	-	5013825	---------	ED
			-	-	1	1	1			
3	12191-KRN-671	GASKET, CYLINDER	1	-	-	-	-	---------	---------	ED
			1	-	-	-	-	---------	5013824	U
			-	1	-	-	-	---------	---------	DK
			-	1	-	-	-	---------	5013824	ED
	12191-KRN-731		1	-	-	-	-	5013825	---------	U
			-	1	-	-	-	5013825	---------	ED
			-	-	1	1	1			
4	94301-12200	DOWEL PIN, 12X20	2	2	2	2	2			
5	96001-06028-00	BOLT, FLANGE, 6X28	1	1	1	1	1			

R. CRANKCASE COVER

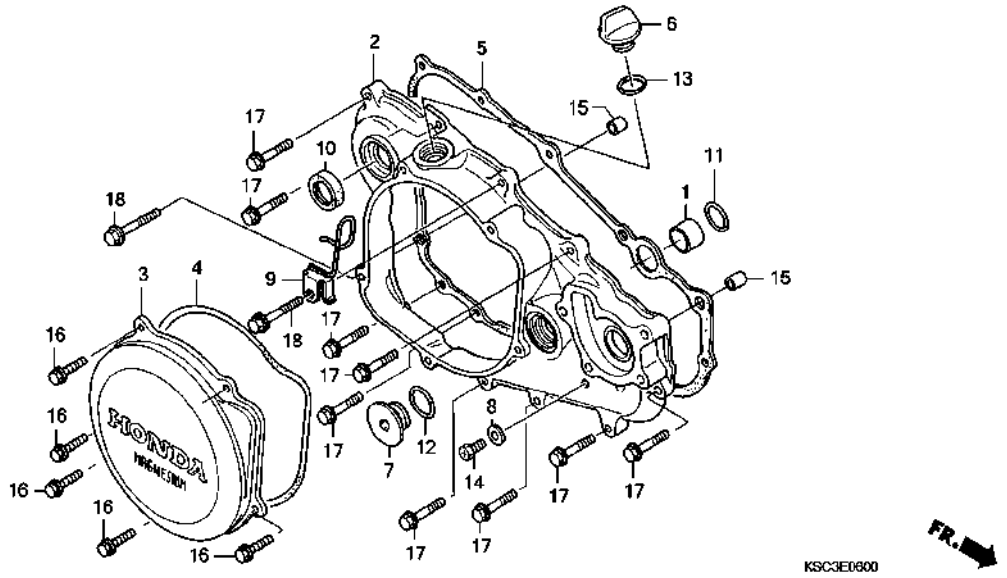

Ref. No.	L.O.N.	(Relative ref. Number) Description	F.R.T.
2	110159	COVER, CRANKCASE :RIGHT	1.0
3		(4)	
	212121	COVER, CLUTCH	0.2
5	110158	GASKET, CRANKCASE COVER :RIGHT	0.7
10	112105	OIL SEAL, KICK STARTER SPINDLE	0.7

Ref. No.	Part No.	Description	Reqd. QTY CRF250X 4	5	6	7	8	Serial No.	Parts catalogue code
1	11102-KRN-670	COLLAR, WATER PASS, 16MM	1	1	1	1	1		
2	11331-KSC-670	COVER, R. CRANKCASE	1	1	1	1	1		
3	11351-KSC-670	COVER, CLUTCH	1	1	1	1	1		
4	11352-KRN-671	GASKET, CLUTCH COVER	1	1	1	1	1		
5	11394-KRN-670	GASKET, R. COVER	1	1	1	-	-		
	11394-KRN-A00		-	-	-	1	1		
6	15611-KA3-710	CAP, OIL FILLER	1	1	1	1	1		
7	90087-KW3-000	CAP, 30MM	1	1	1	1	1		
8	90463-ML7-000	WASHER, SEALING, 6.5MM	1	1	1	1	1		
9	90510-KSC-671	GUIDE COMP., CLUTCH CABLE	1	1	1	1	-		
10	91205-KA3-712	OIL SEAL, 16.5X25X5(NOK)	1	1	1	1	1		
11	91304-MJ0-003	O-RING, 15.8X2.4(SHOWA)	1	1	1	1	1		
12	91305-KF0-003	O-RING, 27X2(ARAI)	1	1	1	1	1		
13	91370-461-000	O-RING, 11.9X2.2	1	1	1	1	1		
14	92301-06010-0A	BOLT, RECESSED, 6X10	1	1	1	-	-		
	90004-GHB-600	BOLT, FLANGE, 6X10(NSHF)	-	-	-	1	1		
15	94301-08140	DOWEL PIN, 8X14	2	2	2	2	2		
16	96001-06020-00	BOLT, FLANGE, 6X20	5	5	5	5	5		
17	96001-06028-00	BOLT, FLANGE, 6X28	9	9	9	9	9		
18	96001-06035-00	BOLT, FLANGE, 6X35	2	2	2	2	2		

CLUTCH

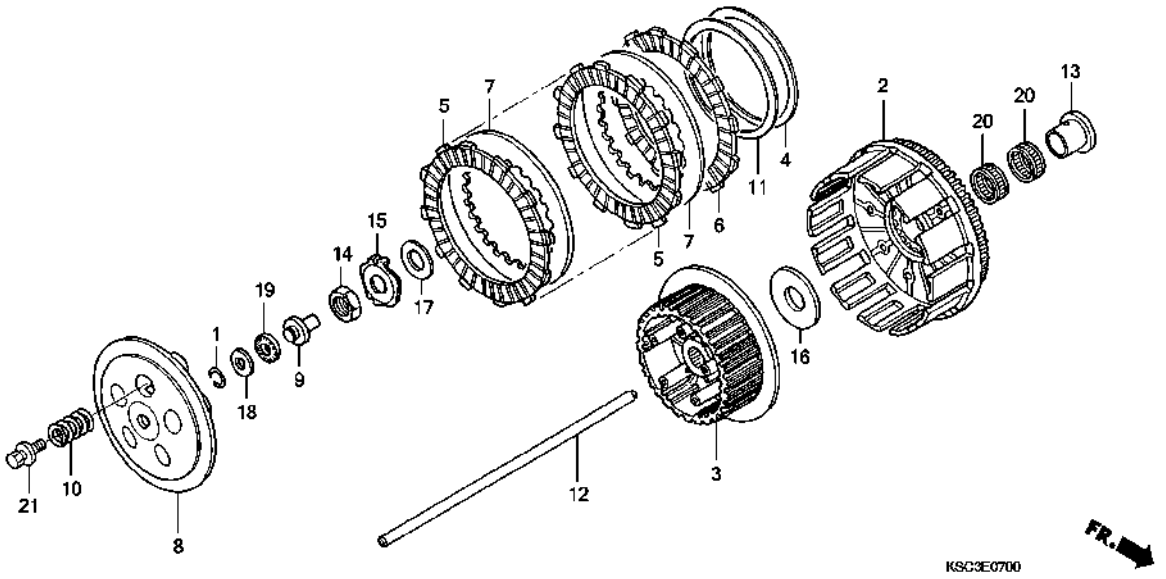

Ref. No.	L.O.N.	(Relative ref. Number) Description	F.R.T.
2	2121A0	OUTER, CLUTCH ----------	0.6
3	212112	CENTER, CLUTCH ----------	0.6
5		(4,6,7,11)	
	2121A1	DISC, CLUTCH FRICTION --------	0.4
		.NOTE: Same time for two units or more	
8		(1,9,18,19)	
	2121A3	PLATE, CLUTCH PRESSURE -------	0.3
10	212107	SPRING, CLUTCH ----------	0.3
		.NOTE: Same time for two units or more	
12		(1,9,18,19)	
	2121B6	ROD, CLUTCH LIFTER ----------	0.3

Ref. No.	Part No.	Description	Reqd. QTY CRF250X 4	5	6	7	8	Serial No.	Parts catalogue code
1	13115-147-000	CLIP, PISTON PIN, 10MM ------	1	1	1	1	1		
2	22100-KSC-670	OUTER COMP., CLUTCH --------	1	1	1	-	-		
	22100-KSC-A10	----------	-	-	-	1	1		
3	22120-KSC-670	CENTER, CLUTCH ----------	1	1	1	-	-		
	22120-KRN-A00	----------	-	-	-	1	1		
4	22125-435-000	SEAT, JUDDER SPRING --------	1	1	1	1	1		
5	22201-KSC-670	DISK A, CLUTCH FRICTION -----	7	7	7	7	7		
6	22202-KSC-670	DISK B, CLUTCH FRICTION -----	1	1	1	1	1		
7	22321-KF0-770	PLATE, CLUTCH ----------	7	7	7	7	7		
8	22351-KZ4-A90	PLATE, CLUTCH PRESSURE ------	1	1	1	1	1		
9	22352-KZ4-A90	PIECE, CLUTCH LIFTER --------	1	1	1	1	1		
10	22401-KSC-670	SPRING, CLUTCH ----------	5	5	5	5	5		
11	22402-435-000	SPRING, JUDDER ----------	1	1	1	1	1		
12	22851-KZ3-J20	ROD, CLUTCH LIFTER ----------	1	1	1	1	1		
13	28237-KSC-670	COLLAR, CLUTCH OUTER --------	1	1	1	1	1		
14	90235-KA4-000	NUT, 18MM ----------	1	1	1	1	1		
15	90441-KSC-670	WASHER, LOCK, 18MM ----------	1	1	1	1	1		
16	90456-KS6-000	WASHER, THRUST, 20MM --------	1	1	1	1	1		
17	90501-ML3-910	WASHER, 18X32X2 ----------	1	1	1	1	1		
18	90608-072-000	WASHER, 12MM ----------	1	1	1	1	1		
19	91001-147-003	BEARING, NEEDLE, 12MM(NTN) --	1	1	1	1	1		
20	91012-P68-003	BEARING, NEEDLE, 27X31X16.8 -	2	2	2	2	2		
21	93404-06020-08	BOLT-WASHER, 6X20 ----------	5	5	5	5	5		

OIL PUMP

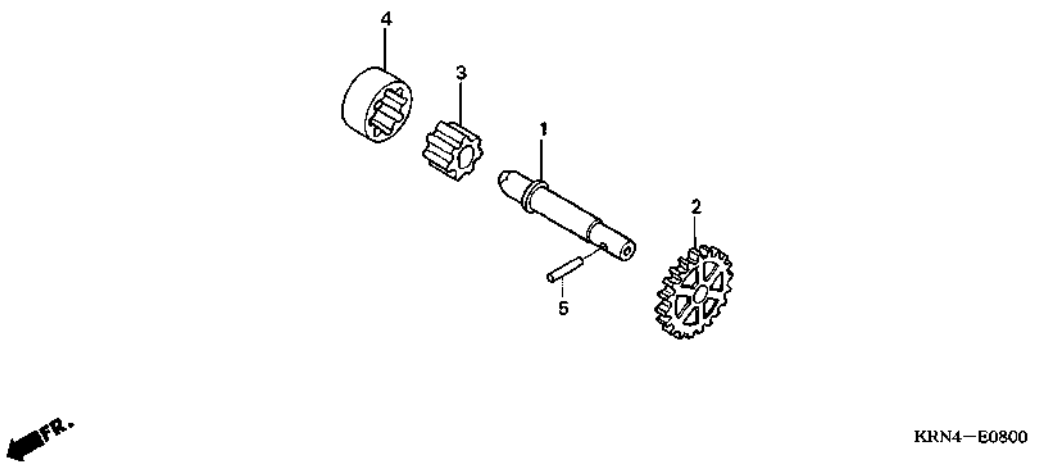

KRN4−E0800

Ref. No.	L.O.N.	(Relative ref. Number) Description	F.R.T.
2	1131C4	GEAR, OIL PUMP DRIVEN ·····	1.0
3		(1,4)	
	1131C7	ROTOR, OIL PUMP ·····	4.2
		.INCLUDES: Engine removal and installation	

Ref. No.	Part No.	Description	Reqd. QTY CRF250X 4	5	6	7	8	Serial No.	Parts catalogue code
1	15111-KRN-670	SHAFT, OIL PUMP ·····	1	1	1	1	1		
2	15133-KRN-670	GEAR, OIL PUMP DRIVEN (18T) ·	1	1	1	1	1		
3	15331-324-000	ROTOR, OIL PUMP INNER ·····	1	1	1	1	1		
4	15332-324-000	ROTOR, OIL PUMP OUTER ·····	1	1	1	1	1		
5	96220-30178	ROLLER, 3X17.8 ·····	1	1	1	1	1		

WATER PUMP

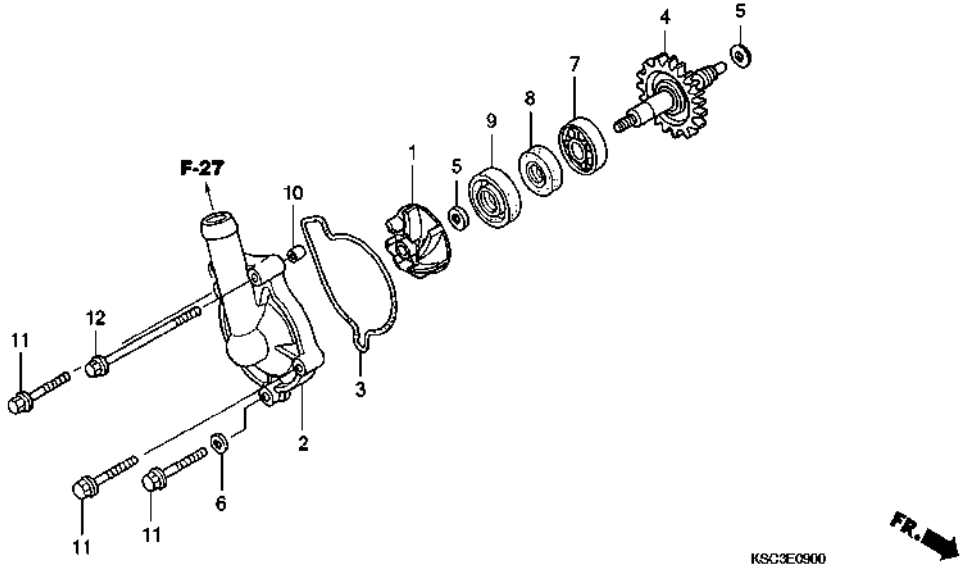

Ref. No.	L.O.N.	(Relative ref. Number) Description	F.R.T.
1	114105	IMPELLER, WATER PUMP ·····	0.4
2		(3)	
	1141B0	COVER, WATER PUMP ·····	0.3
4	114142	SPROCKET OR GEAR, WATER PUMP DRIVEN ·····	0.8
7	114144	BEARING, WATER PUMP ·····	1.0
9	114110	MECHANICAL SEAL, WATER PUMP ··	1.1

Ref. No.	Part No.	Description	Reqd. QTY CRF250X 4	5	6	7	8	Serial No.	Parts catalogue code
1	19215-KRN-670	IMPELLER, WATER PUMP ·····	1	1	1	-	-		
	19215-KRN-A00	·····	-	-	-	1	1		
2	19221-KRN-670	COVER, WATER PUMP ·····	1	1	1	-	-		
	19221-KRN-A00	·····	-	-	-	1	1		
3	19226-KRN-670	GASKET, WATER PUMP ·····	1	1	1	1	1		
4	19240-KSC-670	GEAR COMP., WATER PUMP (22T)	1	1	1	1	1		
5	90447-KE1-000	WASHER, SEALING, 7MM ·····	2	2	2	2	2		
6	90463-ML7-000	WASHER, SEALING, 6.5MM ·····	1	1	1	1	1		
7	91001-KA4-003	BEARING, RADIAL BALL, 12X28X7 (NTN)	1	1	1	1	1		
8	91201-148-003	OIL SEAL, 12X22X5(ARAI) ·····	1	1	1	1	1		
9	91211-KRN-671	SEAL, WATER PUMP ·····	1	1	1	-	-		
	91211-KSE-671	·····	-	-	-	1	1		
10	91320-KE1-000	DOWEL PIN, 8X7 ·····	1	1	1	-	-		
	94301-08100	DOWEL PIN, 8X10 ·····	-	-	-	1	1		
11	96001-06028-00	BOLT, FLANGE, 6X28 ·····	3	3	3	3	3		
12	96001-06085-00	BOLT, FLANGE, 6X85 ·····	1	1	1	1	1		

L. CRANKCASE COVER

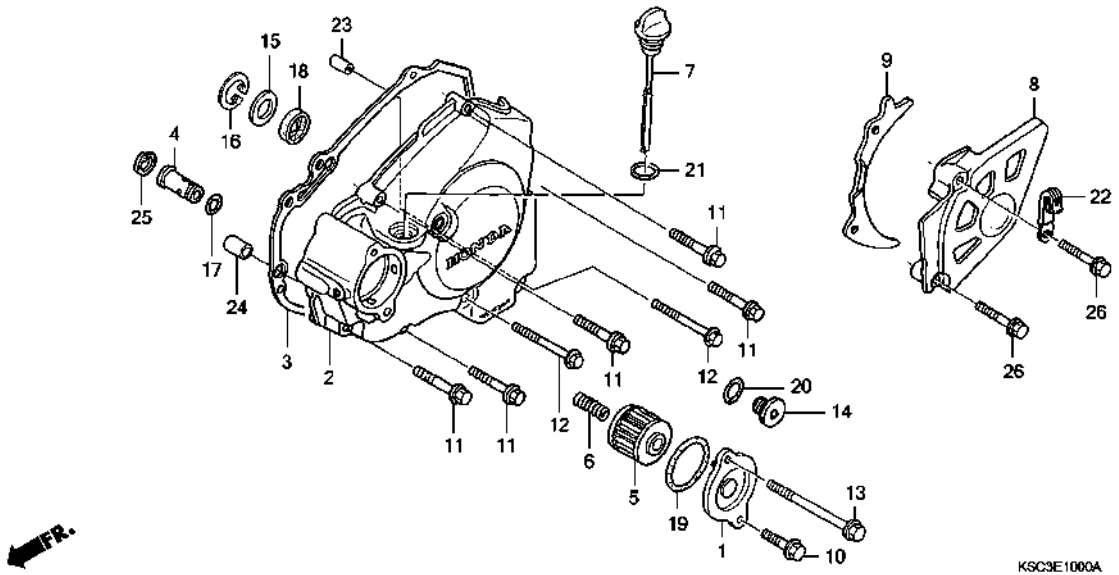

Ref. No.	L.O.N.	(Relative ref. Number) Description	F.R.T.
2		(4,18)	
	1101A6	COVER, CRANKCASE :LEFT ·····	0.5
3	1101A3	GASKET, CRANKCASE COVER :LEFT	0.4
5		(1,19)	
	113127	ELEMENT, OIL FILTER ·····	0.2
8		(9)	
	2131A4	COVER, DRIVE SPROCKET ·····	0.1

Ref. No.	Part No.	Description	Reqd. QTY CRF250X 4	5	6	7	8	Serial No.	Parts catalogue code
1	11333-KRN-670	COVER, OIL FILTER ·····	1	1	1	1	1		
2	11340-KRN-670	COVER COMP., L. CRANKCASE ···	1	1	1	1	1		
3	11395-KRN-670	GASKET, L. COVER ·····	1	1	1	1	1		
4	15220-MEB-770	VALVE ASSY., RELIEF ·····	1	1	1	1	1		
5	15412-MEN-671	FILTER COMP., ENGINE OIL ····	1	1	1	1	1		
6	15414-MEB-670	SPRING, OIL FILTER ·····	1	1	1	1	1		
7	15650-KRN-670	GAUGE, OIL LEVEL ·····	1	1	1	1	1		
8	23810-KSC-670	COVER COMP., DRIVE SPROCKET ·	1	1	1	1	1		
9	23812-KSC-670	GUIDE, DRIVE CHAIN ·····	1	1	1	1	1		
10	90004-GHB-630	BOLT, FLANGE, 6X16(NSHF) ····	1	1	1	1	1		
11	90004-GHB-690	BOLT, FLANGE, 6X32(NSHF) ····	5	5	5	5	5		
12	90004-GHB-710	BOLT, FLANGE, 6X40(NSHF) ····	2	2	2	2	2		
13	90004-GHB-780	BOLT, FLANGE, 6X75(NSHF) ····	1	1	1	1	1		
14	90084-MEN-670	CAP, 14MM ·····	1	1	1	1	1		
15	90451-459-770	WASHER, THRUST, 13MM ·····	1	1	1	1	1		
16	90602-MEB-670	CIRCLIP, SPECIAL INTERNAL, 24MM	1	1	1	1	1		
17	90751-GK1-003	O-RING, 8.5X1.7 ·····	1	1	1	1	1		
18	91204-KRN-671	OIL SEAL, 10X21X5 ·····	1	1	1	1	-		
	91204-HP1-601	·····	-	-	-	-	1		
19	91302-PA9-003	O-RING, 39.8X2.2(ARAI) ·····	1	1	1	1	1		
20	91303-377-000	O-RING, 13.8X2.5 ·····	1	1	1	1	1		
21	91307-035-000	O-RING, 18X3 ·····	1	1	1	1	1		
22	91410-679-000	CLIP, 2X60 ·····	1	1	1	1	1		
23	94301-08140	DOWEL PIN, 8X14 ·····	1	1	1	1	1		

L. CRANKCASE COVER

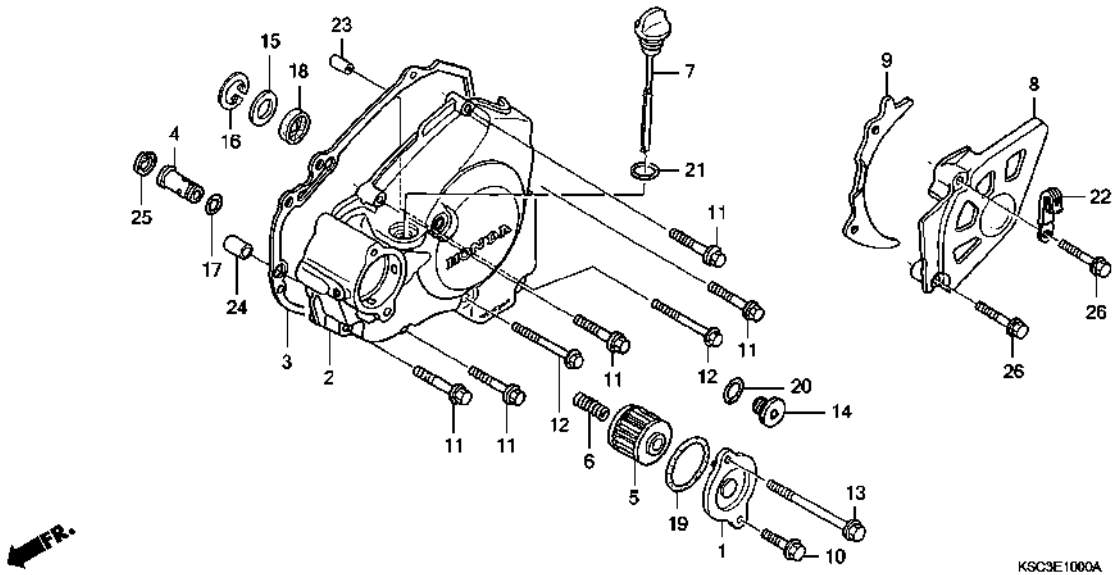

Ref. No.	Part No.	Description	Reqd. QTY CRF250X 4	5	6	7	8	Serial No.	Parts catalogue code
24	94301-10160	DOWEL PIN, 10X16 ----------	1	1	1	1	1		
25	94520-14000	CIRCLIP, INTERNAL, 14MM -----	1	1	1	1	1		
26	96001-06030-07	BOLT, FLANGE, 6X30 ----------	2	2	2	2	2		

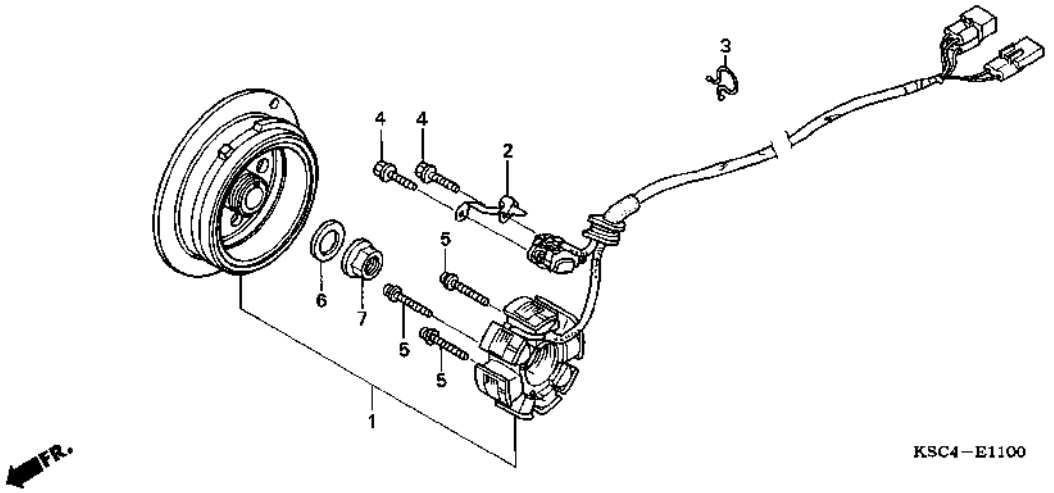

Ref. No.	L.O.N.	(Relative ref. Number) Description	F.R.T.
1	613100	GENERATOR ASSEMBLY	0.8

Ref. No.	Part No.	Description	Reqd. QTY CRF250X 4	5	6	7	8	Serial No.	Parts catalogue code
1	31100-KSC-671	GENERATOR ASSY., FLYWHEEL TYPE A.C.	1	1	1	-	-		
	31100-KSC-A11		-	-	-	1	1		
2	32112-KRN-670	CLAMPER, CORD	1	1	1	1	1		
3	32171-GF9-621	LOCK, PURSE	1	1	1	1	1		
4	90005-896-000	BOLT, FLANGE, 5X16	2	2	2	2	2		
5	90010-MEB-670	SCREW-WASHER, 4X24	3	3	3	3	3		
6	90437-611-000	WASHER, PLAIN, 12MM	1	1	1	1	1		
7	94050-12000	NUT, FLANGE, 12MM	1	1	1	1	1		

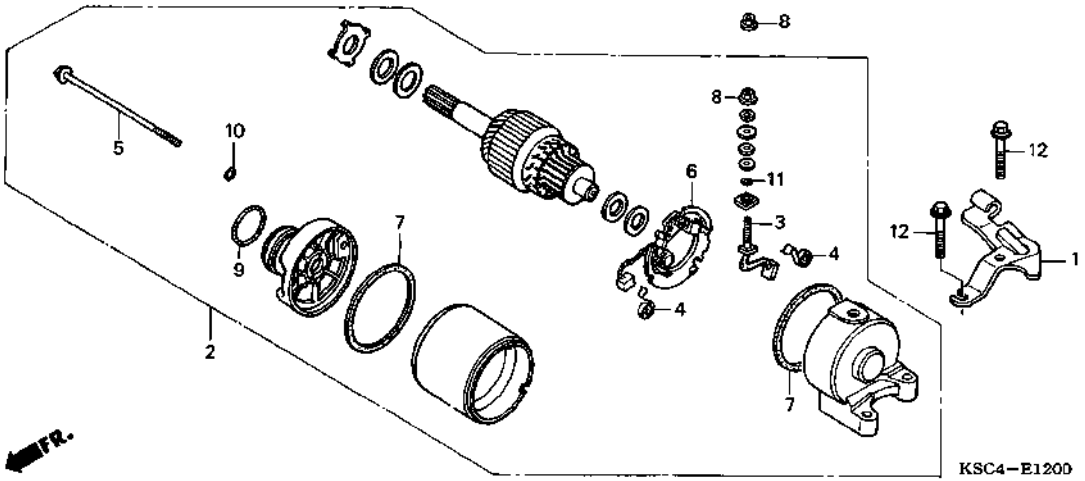

Ref. No.	L.O.N.	(Relative ref. Number) Description	F.R.T.
2	612105	MOTOR, STARTING	2.1
3	6121A4	TERMINAL, BRUSH(STARTER)	2.3
6	6121A5	HOLDER, BRUSH(STARTER)	2.3

Ref. No.	Part No.	Description	Reqd. QTY CRF250X 4	5	6	7	8	Serial No.	Parts catalogue code
1	22838-KSC-670	RECEIVER, CLUTCH CABLE	1	1	1	1	1		
2	31200-KSC-671	MOTOR ASSY., STARTING	1	1	1	1	1		
3	31201-MBE-008	TERMINAL SET, BRUSH	1	1	1	1	1		
4	31204-KS5-901	SPRING, CARBON BRUSH	2	2	2	2	2		
5	31205-MBE-008	BOLT, SETTING	2	2	2	2	2		
6	31206-MBE-008	HOLDER SET, BRUSH	1	1	1	1	1		
7	31207-MBE-008	RING	2	2	2	2	2		
8	90071-MB0-000	NUT-WASHER, 6MM	2	2	2	2	2		
9	91309-425-003	O-RING, 24.4X3.1(ARAI)	1	1	1	1	1		
10	91320-MBE-008	O-RING	2	2	2	2	2		
11	91320-MB0-000	O-RING	1	1	1	1	1		
12	96001-06028-00	BOLT, FLANGE, 6X28	2	2	2	2	2		

STARTING CLUTCH

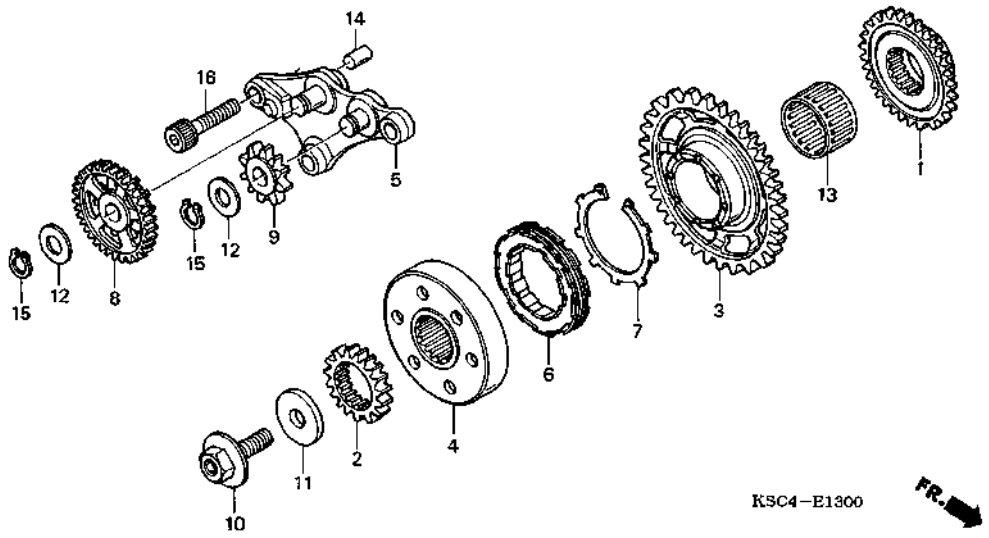

Ref. No.	L.O.N.	(Relative ref. Number) Description	F.R.T.
1	110183	GEAR, BALANCER DRIVE	1.2
2	211105	GEAR, PRIMARY DRIVE	1.1
3	612120	GEAR, STARTER DRIVEN	1.2
4	612131	OUTER, STARTING CLUTCH	1.3
5	612145	HOLDER, STARTER DRIVE GEAR	1.2
6	6121A2	CLUTCH, STARTING ONE WAY	1.3
8	612125	GEAR, STARTER REDUCTION	1.1
9	612135	GEAR, STARTER IDLE	1.1

Ref. No.	Part No.	Description	Reqd. QTY CRF250X 4	5	6	7	8	Serial No.	Parts catalogue code
1	13415-KRN-670	GEAR, BALANCER DRIVE (32T)	1	1	1	1	1		
2	23121-KSC-670	GEAR, PRIMARY DRIVE (18T)	1	1	1	1	1		
3	28110-KSC-670	GEAR COMP., STARTING DRIVEN (38T)	1	1	1	1	1		
4	28115-KSC-670	OUTER, STARTING CLUTCH	1	1	1	1	1		
5	28120-KSC-670	HOLDER COMP., STARTER GEAR	1	1	1	1	1		
6	28125-MT7-004	CLUTCH, ONE WAY	1	1	1	1	1		
7	28127-MS2-612	RING, FRICTION	1	1	1	1	1		
8	28131-KSC-670	GEAR, STARTING REDUCTION (53T/10T)	1	1	1	1	1		
9	28141-KSC-670	GEAR, STARTING IDLE (10T)	1	1	1	1	1		
10	90013-MEB-670	BOLT, SPECIAL, 12X28	1	1	1	1	1		
11	90402-KW6-960	WASHER, PLAIN, 12MM	1	1	1	1	1		
12	90452-166-600	WASHER, THRUST, 12MM	2	2	2	2	2		
13	91025-KT7-003	BEARING, NEEDLE, 30X35X20	1	1	1	1	1		
14	94303-08140	DOWEL PIN, 8X14	1	1	1	1	1		
15	94510-12000	CIRCLIP, EXTERNAL, 12MM	2	2	2	2	2		
16	96600-08028-00	BOLT, SOCKET, 8X28	3	3	3	3	3		

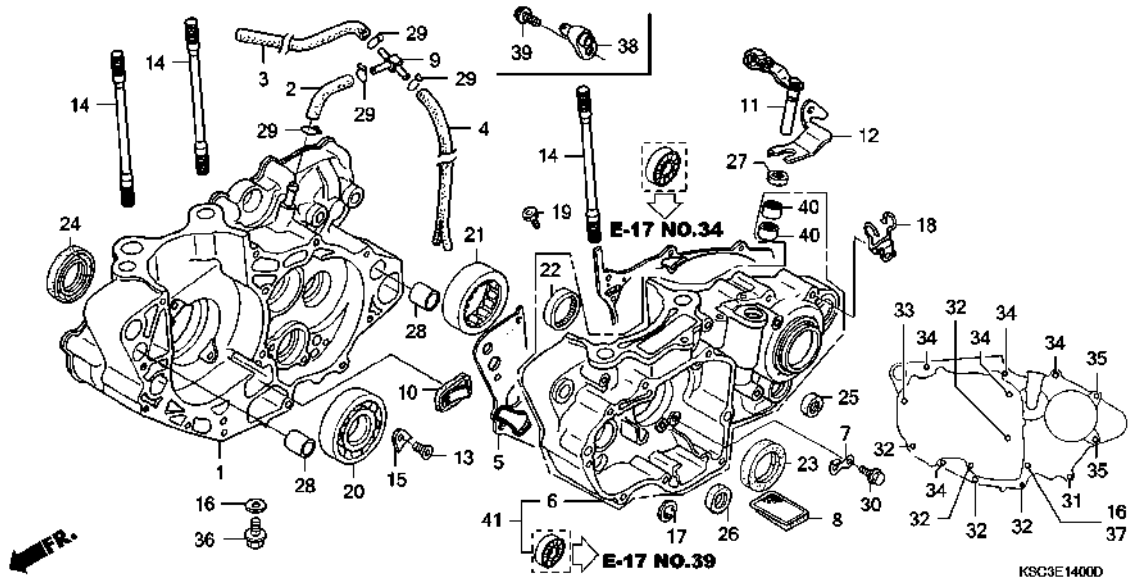

Ref. No.	L.O.N.	(Relative ref. Number) Description	F.R.T.
1	110120	CRANKCASE :RIGHT ·····	4.9
		.INCLUDES: Engine removal and installation	
	1101A2	CRANKCASE :BOTH ·····	5.5
		.INCLUDES: Engine removal and installation	
5	110110	GASKET, CRANKCASE ·····	4.2
		.INCLUDES: Engine removal and installation	
6		(41)	
	110115	CRANKCASE :LEFT ·····	5.0
		.INCLUDES: Engine removal and installation	
	1101A2	CRANKCASE :BOTH ·····	5.5
		.INCLUDES: Engine removal and installation	
8	1131B5	SCREEN, OIL FILTER ·····	4.2
		.INCLUDES: Engine removal and installation	
10	1101L3	ONE WAY VALVE, CRANKCASE ·····	4.2
		.INCLUDES: Engine removal and installation	
11	2121A7	LEVER, CLUTCH ·····	0.2
+20	1101B7	BEARING, CRANKSHAFT :RIGHT ···	4.4

Ref. No.	Part No.	Description	Reqd. QTY CRF250X 4	5	6	7	8	Serial No.	Parts catalogue code
1	11100-KSC-670	CRANKCASE COMP., R. ·····	1	1	-	-	-		
			-	-	1	-	-	--------- 5204152	ED
	11100-KSC-671	·····	-	-	1	-	-	--------- ---------	ED/A,ED/B
			-	-	1	-	-	5204153 ---------	ED
	11100-KSC-A10	·····	-	-	-	1	-		
	11100-KSC-A20	·····	-	-	-	-	1		
2	11105-KSC-670	TUBE A, BREATHER ·····	1	1	1	1	1		
3	11107-KSC-670	TUBE B, BREATHER ·····	1	1	1	1	1		
4	11108-KSC-670	TUBE C, BREATHER ·····	1	1	1	1	1		
5	11191-KRN-670	GASKET, CRANKCASE ·····	1	1	1	-	-		
	11191-KRN-850	·····	-	-	-	1	-		
	11191-KRN-A10	·····	-	-	-	-	1		
6	11200-KSC-672	CRANKCASE COMP., L. ·····	1	-	-	-	-	5013825	
			-	1	-	-	-	5013825 ---------	ED
	11200-KSC-673	·····	-	1	-	-	-	--------- ---------	DK
			-	-	1	-	-		
	11200-KSC-A10	·····	-	-	-	1	-		
	11200-KSC-A20	·····	-	-	-	-	1		
7	11206-KRN-670	PLATE, CAM CHAIN GUIDE ·····	1	1	1	1	1		
8	15421-KK0-000	SCREEN, OIL FILTER ·····	1	1	1	1	1		
9	16961-MCT-010	JOINT, THREE WAY ·····	1	1	1	1	1		
10	18601-MBW-003	VALVE COMP., REED ·····	1	1	1	1	1		
11	22810-KSC-670	LEVER COMP., CLUTCH LIFTER ··	1	1	1	-	-		
	22810-KSC-A10	·····	-	-	-	1	1		
12	22813-KRN-670	PLATE, CLUTCH LEVER ·····	1	1	1	-	-		
13	90003-KRN-670	SCREW, SPECIAL FLAT, 6X12 ···	2	2	2	-	-		
	90001-MEN-850	SCREW, SPECIAL FLAT, 6X17 ···	-	-	-	2	2		

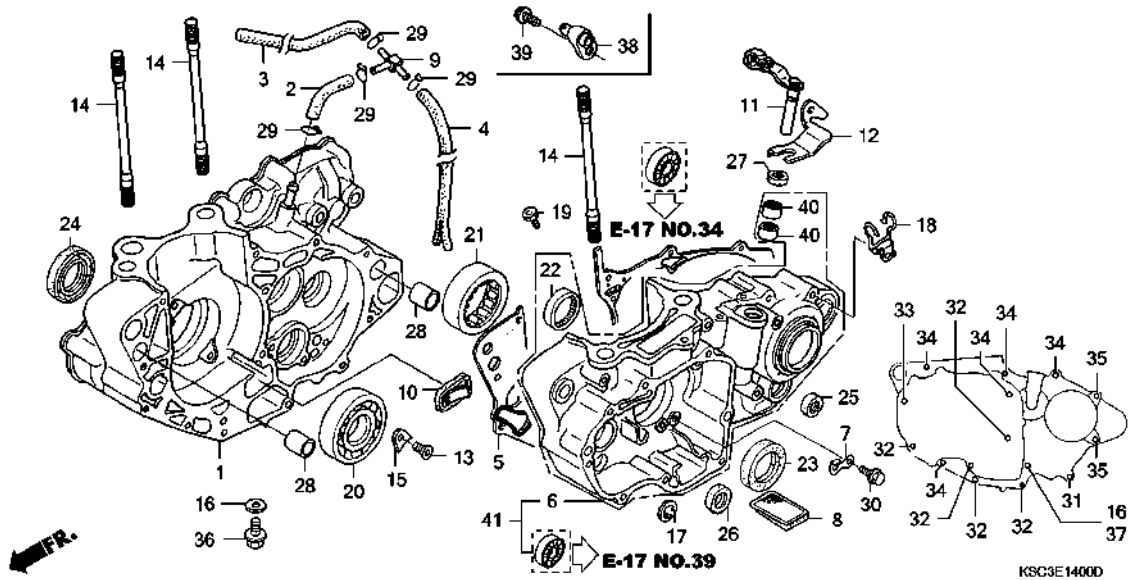

Ref. No.	L.O.N.	(Relative ref. Number) Description	F.R.T.
+20		.INCLUDES: Engine removal and installation	
	1101G0	BEARING, CRANKSHAFT :BOTH ····	4.6
		.INCLUDES: Engine removal and installation	
21	1101B6	BEARING, CRANKSHAFT :LEFT ····	4.4
		.INCLUDES: Engine removal and installation	
	1101G0	BEARING, CRANKSHAFT :BOTH ····	4.6
		.INCLUDES: Engine removal and installation	
23	110131	OIL SEAL, CRANKSHAFT :LEFT ···	4.3
		.INCLUDES: Engine removal and installation	
	1101H3	OIL SEAL, CRANKSHAFT :BOTH ···	4.4
		.INCLUDES: Engine removal and installation	
24	110132	OIL SEAL, CRANKSHAFT :RIGHT ··	4.3
		.INCLUDES: Engine removal and installation	
	1101H3	OIL SEAL, CRANKSHAFT :BOTH ···	4.4
		.INCLUDES: Engine removal and installation	
25	1101F9	OIL SEAL, GEARSHIFT SPINDLE ··	1.1

Ref. No.	Part No.	Description	Reqd. QTY CRF250X 4	5	6	7	8	Serial No.		Parts catalogue code
14	90031-KRN-670	BOLT, STUD, 10X135 ·····	4	4	4	4	4			
15	90441-KRN-670	PLATE, BEARING HOLDER ·····	2	2	2	2	2			
16	90474-333-000	WASHER, SEALING, 8MM ·····	2	2	2	2	2			
17	90604-MEB-670	CIRCLIP, SPECIAL, 33MM ·····	1	1	1	1	1			
18	90610-MEB-670	GUIDE COMP., TUBE ·····	1	1	1	1	1			
19	90901-KRN-670	JET, OIL, #100 ·····	1	-	-	-	-	--------	--------	ED
			1	-	-	-	-	--------	5013824	U
			-	1	-	-	-	--------	--------	DK
			-	1	-	-	-	--------	5013824	ED
	90901-KRN-A00	ORIFICE, #170 ·····	-	-	-	1	-			
	90901-KSC-A20	·····	-	-	-	-	1			
20	91001-KRN-671	BEARING, RADIAL BALL, 30X72X16	1	1	1	1	1			
21	91002-KRN-671	BEARING, SPECIAL ROLLER ·····	1	1	-	-	-	--------	--------	DK,U
			1	1	-	-	-	--------	5220003	ED
			-	-	1	-	-	--------	5205690	ED
	91002-KRN-851	·····	1	1	-	-	-	5220004	--------	ED
			-	-	1	-	-	--------	--------	ED/A,ED/B
			-	-	1	-	-	5205691	--------	ED
			-	-	-	1	-			
	91002-KRN-A11	·····	-	-	-	-	1			
22	91022-KA4-740	BEARING, SHELL, 33X38X8(NTN)	1	1	1	1	1			
23	91201-MEB-671	OIL SEAL, 38X52X7(ARAI) ·····	1	1	1	1	1			
24	91202-MEB-671	OIL SEAL, 39X56X7(ARAI) ·····	1	1	1	-	-			
	91202-MEY-671	OIL SEAL, 39X56X7.5(ARAI) ···	-	-	-	1	1			
25	91203-KA4-771	OIL SEAL, 14X22X5(NOK) ·····	1	1	1	1	1			
26	91203-MEB-671	OIL SEAL, 20X33X5(ARAI) ·····	1	1	1	1	1			

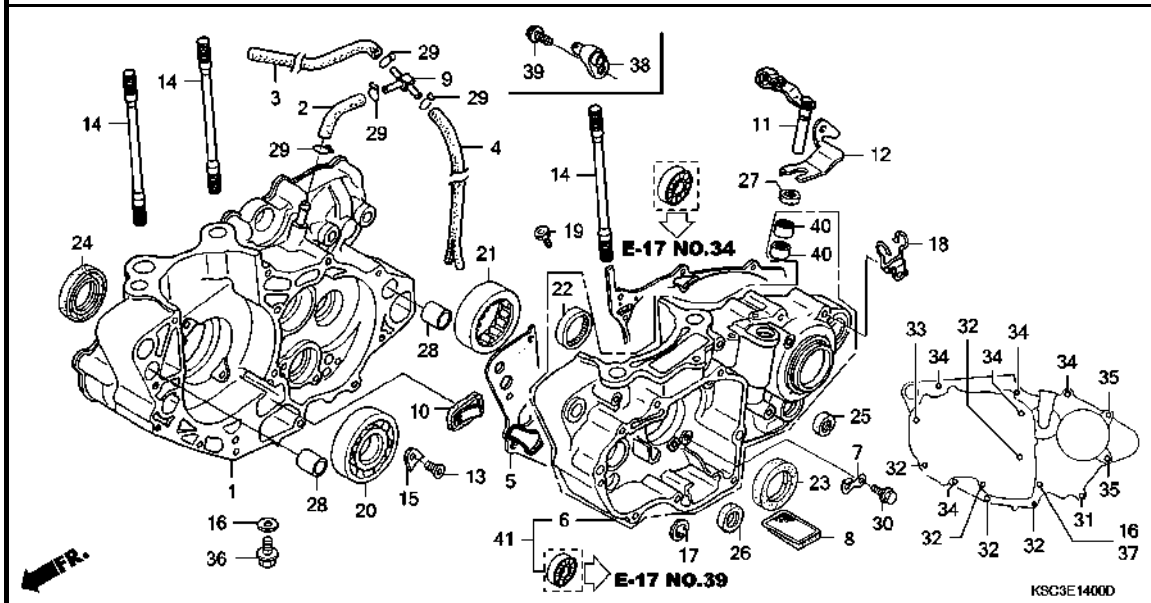

Ref. No.	Part No.	Description	Reqd. QTY CRF250X 4	5	6	7	8	Serial No.	Parts catalogue code
27	91205-MEB-671	OIL SEAL, 12X18X3(ARAI) -----	1	1	1	1	1		
28	94301-14200	DOWEL PIN, 14X20 -----------	2	2	2	2	2		
29	95002-02100	CLIP, TUBE (B10) -----------	4	4	4	4	4		
30	96001-06012-00	BOLT, FLANGE, 6X12 ----------	1	1	1	1	1		
31	96001-06040-00	BOLT, FLANGE, 6X40 ----------	1	1	1	1	1		
32	96001-06045-00	BOLT, FLANGE, 6X45 ----------	5	5	5	5	5		
33	96001-06060-00	BOLT, FLANGE, 6X60 ----------	1	1	1	1	1		
34	96001-06070-00	BOLT, FLANGE, 6X70 ----------	5	5	5	5	5		
35	96001-06075-00	BOLT, FLANGE, 6X75 ----------	2	2	2	2	2		
36	96300-08025-00	BOLT, FLANGE, 8X25 ----------	1	1	1	1	1		
37	96300-08070-00	BOLT, FLANGE, 8X70 ----------	1	1	1	1	1		
38	11210-KRN-730	JET COMP., PISTON, #80 ------	1	-	-	-	-	5013825 --------	U
			-	1	-	-	-	5013825 --------	ED
			-	-	1	1	1		
39	96001-06012-00	BOLT, FLANGE, 6X12 ----------	1	-	-	-	-	5013825 --------	U
			-	1	-	-	-	5013825 --------	ED
			-	-	1	1	1		
40	91053-719-005	BEARING, NEEDLE, 12X16X10(NTN)	2	2	2	2	2		
41	11200-KSC-305	CRANKCASE SET, L. ----------	1	-	-	-	-	--------	5013824
			-	1	-	-	-	--------	5013824 ED

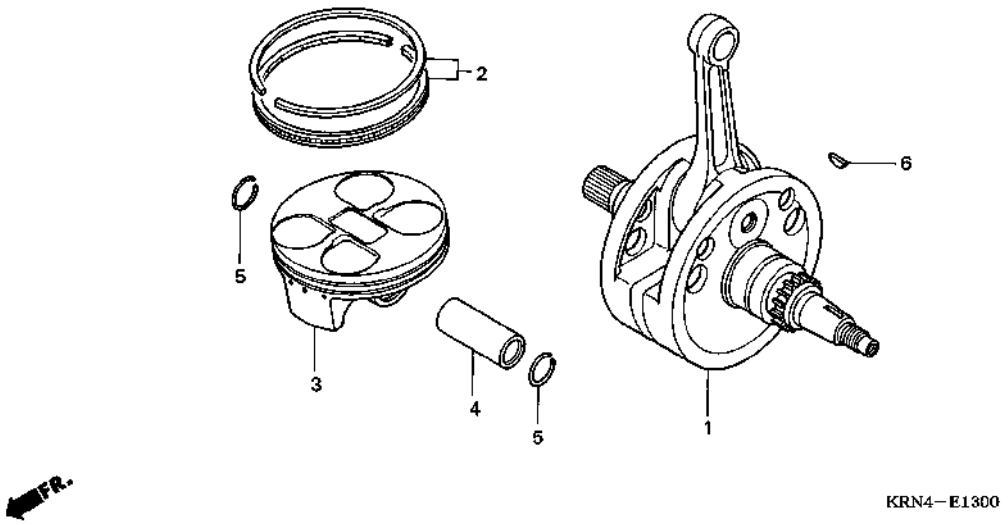

Ref. No.	L.O.N.	(Relative ref. Number) Description	F.R.T.
1	1101B5	CRANKSHAFT	4.4
		.INCLUDES: Engine removal and installation	
3		(2,4,5)	
	111103	RING, PISTON AND/OR PISTON (ONE)	2.2

Ref. No.	Part No.	Description	Reqd. QTY CRF250X 4	5	6	7	8	Serial No.	Parts catalogue code
1	13000-KSC-670	CRANKSHAFT COMP.	1	1	-	-	-		
			-	-	1	-	-	--------- 5207328	ED
	13000-KSC-671	.....	-	-	1	-	-	--------- ---------	ED/A,ED/B
			-	-	1	-	-	5207329 ---------	ED
	13000-KSC-A10	.....	-	-	-	1	1		
2	13011-KRN-670	RING SET, PISTON (STD.)	1	1	1	-	-		
	13011-KRN-850	.....	-	-	-	1	1		
3	13101-KRN-670	PISTON	1	1	1	-	-		
	13101-KRN-850	.....	-	-	-	1	1		
4	13111-KRN-670	PIN, PISTON	1	1	-	-	-		
			-	-	1	-	-	--------- 5201552	ED
	13111-KRN-850	.....	-	-	1	-	-	--------- ---------	ED/A,ED/B
			-	-	1	-	-	5201553 ---------	ED
			-	-	-	1	1		
5	13115-KM7-700	CLIP, PISTON PIN, 16MM	2	2	2	2	2		
6	13331-360-000	KEY, SPECIAL WOODRUFF, 25X14	1	1	1	1	1		

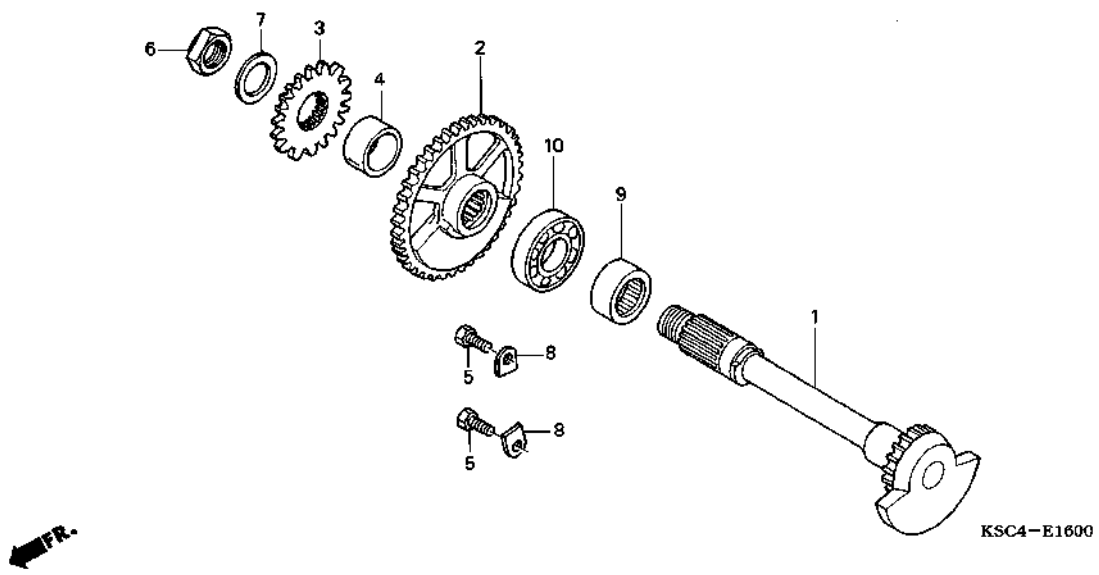

Ref. No.	L.O.N.	(Relative ref. Number) Description	F.R.T.
1	110185	SHAFT, BALANCER ----------	1.5
2	1101L5	GEAR, BALANCER DRIVEN -------	1.2
3	1101F8	GEAR, WATER PUMP DRIVE ------	0.8
9	1101G3	BEARING, BALANCER SHAFT :LEFT	4.4
		.INCLUDES: Engine removal and installation	
	1101G5	BEARING, BALANCER SHAFT :BOTH	4.6
		.INCLUDES: Engine removal and installation	
10	1101G4	BEARING, BALANCER SHAFT :RIGHT	4.4
		.INCLUDES: Engine removal and installation	
	1101G5	BEARING, BALANCER SHAFT :BOTH	4.6
		.INCLUDES: Engine removal and installation	

Ref. No.	Part No.	Description	Reqd. QTY CRF250X 4	5	6	7	8	Serial No.	Parts catalogue code
1	13420-KSC-670	SHAFT COMP., BALANCER ------	1	1	1	-	-		
	13420-KSC-A10	----------	-	-	-	1	1		
2	13422-KRN-670	GEAR, BALANCER DRIVEN (32T) -	1	1	1	-	-		
	13422-KRN-A00	----------	-	-	-	1	1		
3	19245-KRN-670	GEAR, WATER PUMP DRIVE (19T)	1	1	-	-	-		
			-	-	1	-	-	-------- --------	ED
			-	-	1	-	-	-------- 5220987	ED/A
	19245-KRN-671	----------	-	-	1	-	-	-------- --------	ED/B
			-	-	1	-	-	5220988 --------	ED/A
			-	-	-	1	1		
4	19246-KSC-670	COLLAR, WATER PUMP GEAR -----	1	1	1	1	1		
5	90038-KY4-900	BOLT, HEX., 6X16 ----------	2	2	2	2	2		
6	90204-MN5-000	NUT, HEX., 14MM ----------	1	1	1	1	1		
7	90433-KE1-000	WASHER, 14MM ----------	1	1	1	1	1		
8	90441-KA4-700	PLATE, BEARING HOLDER -------	2	2	2	2	2		
9	91004-MEB-671	BEARING, SPECIAL ROLLER, 20X32X14	1	1	1	1	1		
10	91005-MEB-671	BEARING, RADIAL BALL, 6003 --	1	1	1	1	1		

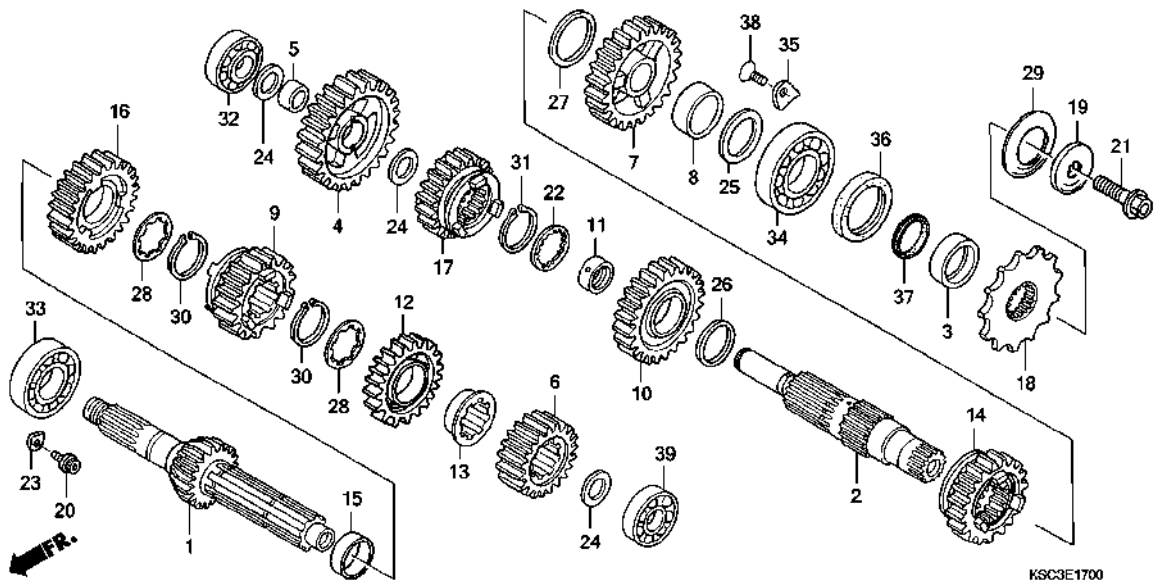

Ref. No.	L.O.N.	(Relative ref. Number) Description	F.R.T.
1		(6,9,12,16)	
	210141	MAINSHAFT, TRANSMISSION ·····	4.4
		.INCLUDES: Engine removal and installation	
	210141A	.Replace countershaft add ····	0.2
2		(4,7,10,14,17)	
	210142	COUNTERSHAFT, TRANSMISSION ···	4.4
		.INCLUDES: Engine removal and installation	
18	213135	SPROCKET, DRIVE ·····	0.2
32	2101C8	BEARING, COUNTERSHAFT :RIGHT ·	4.4
		.INCLUDES: Engine removal and installation	
	2101C9	BEARING, COUNTERSHAFT :BOTH ··	4.6
		.INCLUDES: Engine removal and installation	
	2101D4	BEARING, MAINSHAFT AND COUNTERSHAFT :ALL ·····	4.8
		.INCLUDES: Engine removal and installation	
33	2101C5	BEARING, MAINSHAFT :RIGHT ····	4.4
		.INCLUDES: Engine removal and installation	
+	2101C6	BEARING, MAINSHAFT :BOTH ·····	4.6

Ref. No.	Part No.	Description	Reqd. QTY CRF250X 4	5	6	7	8	Serial No.	Parts catalogue code
1	23210-KSC-670	SHAFT COMP., MAIN (13T) ·····	1	1	1	–	–		
	23210-KSC-A10	·····	–	–	–	1	1		
2	23221-KSC-670	COUNTERSHAFT ·····	1	1	1	–	–		
	23221-KSC-A10	·····	–	–	–	1	1		
3	23225-KSC-670	COLLAR, COUNTERSHAFT ·····	1	1	1	1	1		
4	23411-KSC-670	GEAR, COUNTERSHAFT LOW (31T)	1	1	1	1	1		
5	23413-KSC-670	COLLAR, 17MM ·····	1	1	1	1	1		
6	23421-KSC-670	GEAR, MAINSHAFT SECOND (16T)	1	1	1	1	1		
7	23431-KSC-670	GEAR, COUNTERSHAFT SECOND (28T)	1	1	1	1	1		
8	23432-KSC-670	COLLAR, 24MM ·····	1	1	1	1	1		
9	23441-KSC-670	GEAR, MAINSHAFT THIRD (21T) ·	1	1	1	1	1		
10	23451-KSC-670	GEAR, COUNTERSHAFT THIRD (28T)	1	1	1	1	1		
11	23452-KSC-670	COLLAR, COUNTERSHAFT THIRD GEAR	1	1	1	1	1		
12	23461-KSC-670	GEAR, MAINSHAFT FOURTH (24T)	1	1	1	1	1		
13	23462-KSC-670	COLLAR, MAINSHAFT FOURTH GEAR	1	1	1	1	1		
14	23471-KSC-670	GEAR, COUNTERSHAFT FOURTH (25T)	1	1	1	1	1		
15	23472-KZ4-000	COLLAR, 20MM ·····	1	1	1	1	1		
16	23481-KSC-670	GEAR, MAINSHAFT FIFTH (27T) ·	1	1	1	1	1		
17	23491-KSC-670	GEAR, COUNTERSHAFT FIFTH (22T)	1	1	1	1	1		
18	23801-KSC-670	SPROCKET, DRIVE (14T) ·····	1	1	1	1	1		
19	23802-KSC-670	COLLAR, DRIVE SPROCKET ·····	1	1	1	1	1		
20	90071-MF5-000	BOLT, FLANGE SOCKET, 6X14 ···	2	2	2	2	2		

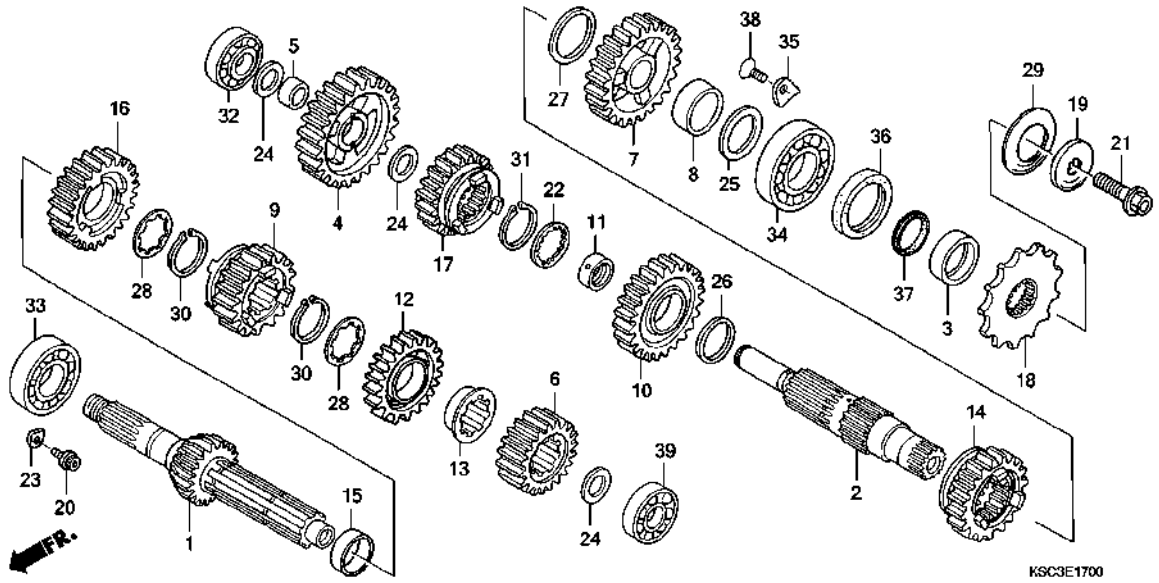

Ref. No.	L.O.N.	(Relative ref. Number) Description	F.R.T.
+33		.INCLUDES: Engine removal and installation	
	2101D4	BEARING, MAINSHAFT AND COUNTERSHAFT :ALL ----------	4.8
		.INCLUDES: Engine removal and installation	
34	2101C7	BEARING, COUNTERSHAFT :LEFT --	4.4
		.INCLUDES: Engine removal and installation	
39	2101C2	BEARING, MAINSHAFT :LEFT -----	4.4
		.INCLUDES: Engine removal and installation	

Ref. No.	Part No.	Description	Reqd. QTY CRF250X 4	5	6	7	8	Serial No.	Parts catalogue code
21	90112-413-000	BOLT, UBS, 8X33 ----------	1	1	1	1	1		
22	90404-KW3-000	WASHER, THRUST INVOLUTE, 22X21X1	1	1	1	1	1		
23	90441-KA4-700	PLATE, BEARING HOLDER -------	2	2	2	2	2		
24	90446-357-000	WASHER, THRUST, 17.2MM ------	3	3	3	3	3		
25	90453-KSR-A00	WASHER, 22X32X1.5 ----------	1	1	1	1	1		
26	90452-KZ4-000	WASHER, THRUST, 22X30X1 -----	1	1	1	1	1		
27	90452-KSR-A00	WASHER, 24X32X1 ----------	1	1	1	1	1		
28	90455-HM8-A40	WASHER, SPLINE, 20MM --------	2	2	2	2	2		
29	90501-KSC-670	WASHER, SPRING, 24MM --------	1	1	1	1	1		
30	90601-360-000	SET RING, 20MM ----------	2	2	2	2	2		
31	90602-360-000	SET RING, 22MM ----------	1	1	1	1	1		
32	91001-KZ4-J11	BEARING, RADIAL BALL, 17X35X10	1	-	-	-	-	-------- 5013824	
			-	1	1	-	-	-------- --------	DK,ED/A,ED/B
			-	1	-	-	-	-------- 5013824	ED
			-	-	-	1	1		
	91001-KSR-A01	BEARING, RADIAL BALL, 17X36X10	1	-	-	-	-	5013825	
			-	1	-	-	-	5013825 --------	ED
			-	-	1	-	-	-------- --------	ED
33	91004-KSC-671	BEARING, RADIAL BALL, 22X47X14	1	1	1	1	1		
34	91005-KSR-A01	BEARING, RADIAL BALL, 22X47X14	1	-	-	-	-	-------- --------	U
			-	-	1	-	-	-------- 5222686	ED/A
	91005-KRN-851	----------	1	-	1	-	-	-------- --------	ED,ED/B
			-	1	-	-	-		
			-	-	1	-	-	5222687 --------	ED/A
	91005-KRN-A01	BEARING, RADIAL BALL, 22X52X14	-	-	-	1	1		
35	91012-KA3-710	PLATE, COUNTERSHAFT BEARING -	2	2	2	2	2		

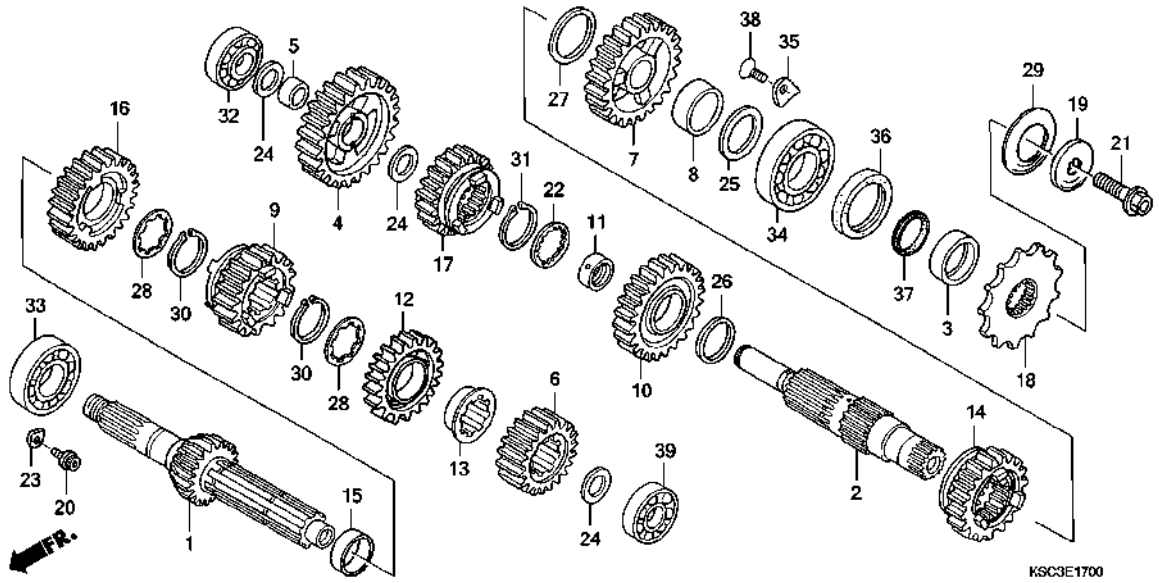

Ref. No.	Part No.	Description	Reqd. QTY CRF250X 4	5	6	7	8	Serial No.	Parts catalogue code
36	91201-KSR-A01	OIL SEAL, 28X37X7 ----------	1	1	1	1	1		
37	91301-KSR-A01	D-RING, 22MM ----------	1	1	1	1	1		
38	93600-06010-0H	SCREW, FLAT, 6X10 ----------	2	2	2	2	2		
39	91001-KZ4-J11	BEARING, RADIAL BALL, 17X35X10	1	-	-	-	-	-------- 5013824	
			-	1	-	-	-	-------- --------	DK
			-	1	-	-	-	-------- 5013824	ED
	91001-KSR-A01	BEARING, RADIAL BALL, 17X36X10	1	-	-	-	-	5013825	
			-	1	-	-	-	5013825 --------	ED
			-	-	1	-	-		
	91006-KRN-A01	BEARING, RADIAL BALL, 17X38X10	-	-	-	1	1		

GEARSHIFT DRUM

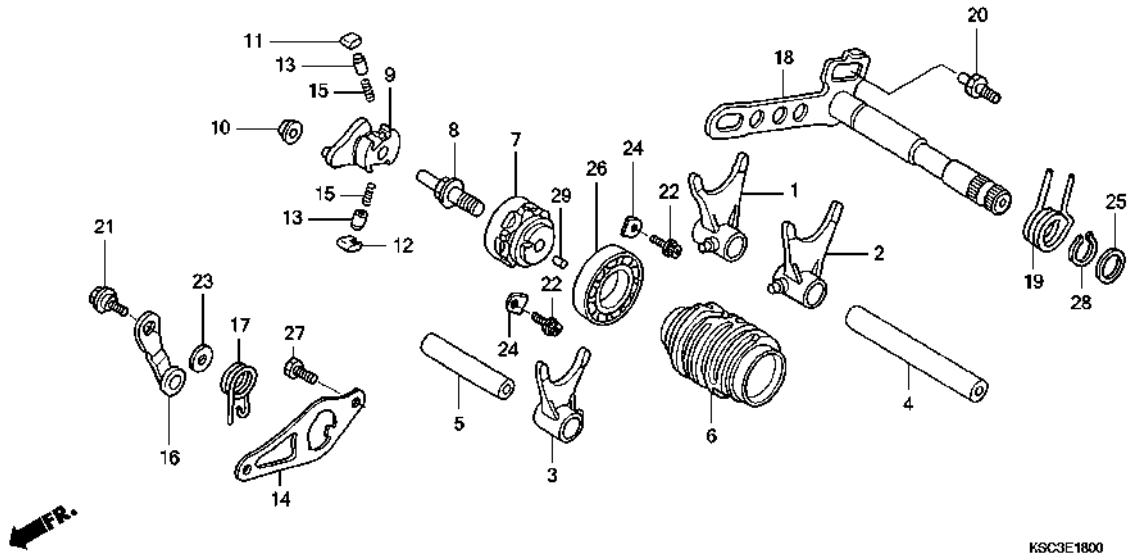

Ref. No.	L.O.N.	(Relative ref. Number) Description	F.R.T.
1		(2,3,4,5)	
	210112	FORK, GEARSHIFT ·····	4.4
		.NOTE: Same time for two units or more	
		.INCLUDES: Engine removal and installation	
6		(26)	
	2101A9	DRUM, GEARSHIFT ·····	4.4
		.INCLUDES: Engine removal and installation	
7	2101B2	CENTER, GEARSHIFT DRUM ·····	1.3
9		(11,12,13,15)	
	2101B3	SHIFTER, GEARSHIFT DRUM ·····	1.0
14	2101B4	PLATE, GUIDE ·····	1.2
16		(17)	
	210125	STOPPER OR SPRING, SHIFT DRUM	1.4
18		(19,25,28)	
	210122	SPINDLE, GEARSHIFT ·····	1.0

Ref. No.	Part No.	Description	Reqd. QTY CRF250X 4	5	6	7	8	Serial No.	Parts catalogue code
1	24211-KSC-670	FORK, R. GEARSHIFT ·····	1	1	1	1	1		
2	24221-KSC-670	FORK, L. GEARSHIFT ·····	1	1	1	1	1		
3	24231-KSC-670	FORK C, GEARSHIFT ·····	1	1	1	1	1		
4	24241-KSC-670	SHAFT A, SHIFT FORK ·····	1	1	1	1	1		
5	24242-KSC-670	SHAFT B, SHIFT FORK ·····	1	1	1	1	1		
6	24311-KSC-670	DRUM, GEARSHIFT ·····	1	1	1	-	-		
	24311-KRN-A00	·····	-	-	-	1	1		
7	24312-KA3-741	CENTER, GEARSHIFT DRUM ·····	1	1	1	1	1		
8	24315-HA0-000	PIN, SHIFTER ·····	1	1	1	1	1		
9	24321-KZ4-620	SHIFTER, DRUM ·····	1	1	1	1	1		
10	24322-MM4-000	COLLAR, SHIFTER ·····	1	1	1	1	1		
11	24324-KA3-711	PAWL A, RATCHET ·····	1	1	1	1	1		
12	24325-KA3-711	PAWL B, RATCHET ·····	1	1	1	1	1		
13	24326-KBH-901	PLUNGER, PAWL ·····	2	2	2	2	2		
14	24328-KRN-670	PLATE, GUIDE ·····	1	1	1	1	1		
15	24329-KA3-740	SPRING, PAWL PLUNGER ·····	2	2	2	2	2		
16	24430-KA3-740	STOPPER COMP., DRUM ·····	1	1	1	1	1		
17	24435-KZ4-690	SPRING, DRUM STOPPER ·····	1	1	1	1	1		
18	24610-KRN-670	SPINDLE COMP., GEARSHIFT ····	1	1	-	-	-		
	24610-KRN-730	·····	-	-	1	1	1		
19	24651-MEB-670	SPRING, GEARSHIFT RETURN ····	1	1	1	1	1		
20	24652-HA0-000	PIN, GEARSHIFT RETURN SPRING	1	1	1	1	1		
21	90022-MG8-000	PIVOT, SHIFT DRUM STOPPER ARM	1	1	1	1	1		
22	90071-MF5-000	BOLT, FLANGE SOCKET, 6X14 ···	2	2	2	2	2		
23	90435-HB3-000	WASHER, 6.1MM ·····	1	1	1	1	1		

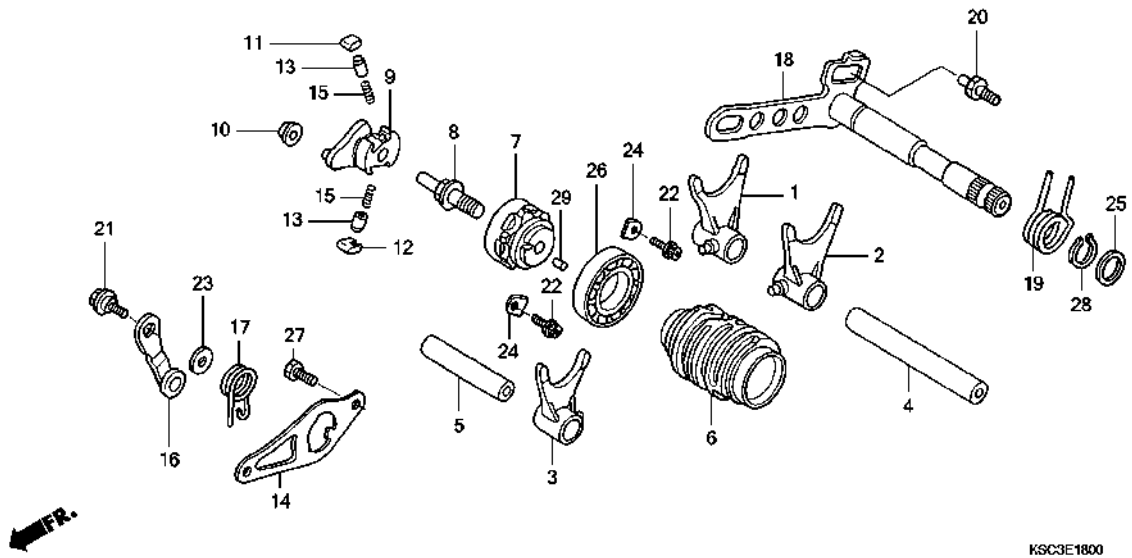

Ref. No.	Part No.	Description	Reqd. QTY CRF250X 4	5	6	7	8	Serial No.	Parts catalogue code
24	90441-KA4-700	PLATE, BEARING HOLDER -------	2	2	2	2	2		
25	90451-155-000	WASHER, 14MM ----------	1	1	1	1	1		
26	91004-KY4-900	BEARING, RADIAL BALL, 6905U -	1	1	1	1	1		
27	93301-06016-0A	BOLT, HEX., 6X16 ----------	2	2	2	2	2		
28	94510-14000	CIRCLIP, EXTERNAL, 14MM -----	1	1	1	1	1		
29	96220-40080	ROLLER, 4X8 ----------	1	1	1	1	1		

KICK STARTER SPINDLE

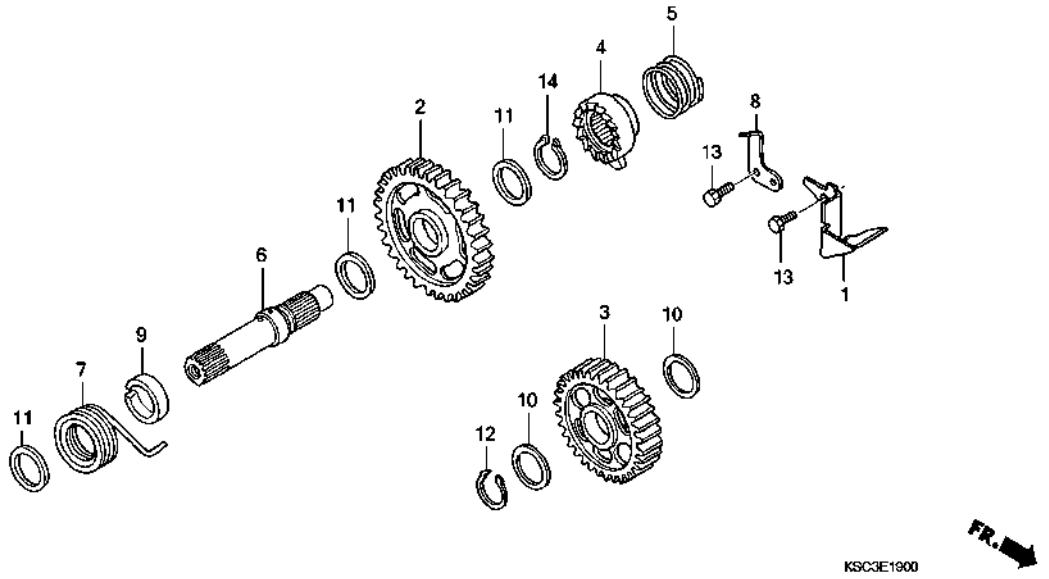

Ref. No.	L.O.N.	(Relative ref. Number) Description	F.R.T.
2	1121A0	PINION, KICK STARTER ·····	1.0
3	1121B2	GEAR, KICK STARTER FIRST IDLE	0.9
4		(5)	
	1121A1	RATCHET, KICK(RECOIL) STARTER	1.0
6	1121A2	SPINDLE, KICK STARTER ·····	1.0
7		(9)	
	112103	SPRING, KICK STARTER RETURN ··	0.8

Ref. No.	Part No.	Description	Reqd. QTY CRF250X 4	5	6	7	8	Serial No.	Parts catalogue code
1	15201-KSC-670	PLATE, OIL GUIDE ·····	1	1	1	1	1		
2	28210-KSC-670	PINION COMP., KICK STARTER (32T)	1	1	1	1	1		
3	28230-KRN-670	GEAR COMP., STARTER IDLE (30T)	1	1	1	1	1		
4	28241-KA3-710	RATCHET, STARTER ·····	1	1	1	1	1		
5	28242-KA3-710	SPRING, RATCHET ·····	1	1	1	1	1		
6	28251-KZ4-000	SPINDLE, KICK STARTER ·····	1	1	1	1	1		
7	28261-KA3-710	SPRING, STARTER RETURN ·····	1	1	1	1	1		
8	28262-KS6-701	PLATE, RATCHET SLIDER ·····	1	1	1	1	1		
9	28282-KZ4-B00	COLLAR, KICK SPINDLE ·····	1	1	1	1	1		
10	90452-178-000	WASHER, THRUST, 17MM ·····	2	2	2	2	2		
11	90501-444-000	WASHER, 16.8X24 ·····	3	3	3	3	3		
12	90601-001-000	CIRCLIP, EXTERNAL, 17MM ·····	1	1	1	1	1		
13	93301-06016-0A	BOLT, HEX., 6X16 ·····	2	2	2	2	2		
14	94510-16000	CIRCLIP, EXTERNAL, 16MM ·····	1	1	1	1	1		

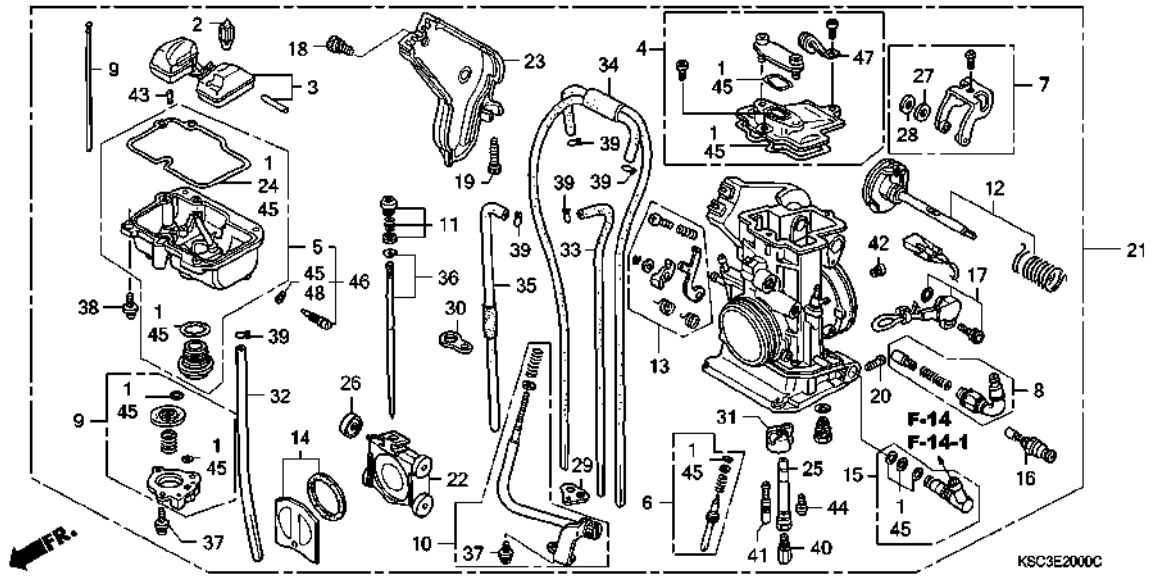

Ref. No.	L.O.N.	(Relative ref. Number) Description	F.R.T.
2		(3)	
	311120	FLOAT OR FLOAT VALVE	0.8
5		(46)	
	3111A6	CHAMBER, FLOAT	0.8
8	3111G0	VALVE SET, HOT START	0.7
9	3111F4	PUMP SET, ACCELERATOR	0.8
16	311125	VALVE, STARTER	0.6
17	617115	SENSOR, THROTTLE	0.9
21	3111B5	CARBURETOR ASSEMBLY	0.9
22		(14,26)	
	3111A8	VALVE, THROTTLE	0.7
25		(31,41,44)	
	3111A4	HOLDER, NEEDLE JET	0.8
36		(11)	
	3111A3	NEEDLE, JET	0.4
40	3111D4	JET, MAIN	0.2

Ref. No.	Part No.	Description	Reqd. QTY CRF250X 4	5	6	7	8	Serial No.	Parts catalogue code
1	16010-KRN-671	GASKET SET	1	1	-	-	-		
			-	-	1	-	-	---------	FCRO2A A ED
2	16011-KZ3-J11	VALVE SET, FLOAT	1	1	1	-	-		
	16011-MEN-851		-	-	-	1	1		
3	16013-MEB-671	FLOAT SET	1	1	1	1	1		
4	16014-KRN-671	TOP SET	1	1	-	-	-		
			-	-	1	-	-	---------	FCRO2A A ED
	16014-KRN-731		-	-	1	-	-	--------- ---------	ED/A,ED/B
			-	-	1	-	-	FCRO2A B ---------	ED
			-	-	-	1	1		
5	16015-KSC-671	CHAMBER SET, FLOAT	1	1	-	-	-		
			-	-	1	-	-	---------	FCRO2A A ED
	16015-MEN-851		-	-	1	-	-	--------- ---------	ED/A,ED/B
			-	-	1	-	-	FCRO2A B ---------	ED
6	16016-KSC-671	SCREW SET A	1	1	1	-	1		
	16016-KSC-A11		-	-	-	1	-		
7	16018-MEB-671	ARM SET, LINK	1	1	1	-	-		
	16018-MEY-A11		-	-	-	1	1		
8	16019-MEB-671	START SET, HOT	1	1	1	1	1		
9	16021-KRN-671	DIAPHRAGM SET, PUMP	1	1	1	-	-		
	16021-MEN-A01		-	-	-	1	1		
10	16028-MEB-671	SCREW SET B	1	1	1	-	-		
	16028-MEN-A01		-	-	-	1	1		
11	16029-MEB-671	SCREW SET, JET NEEDLE	1	1	1	-	-		
	16029-MEY-A11		-	-	-	1	1		
12	16032-MEB-671	SHAFT SET, THROTTLE	1	1	1	-	-		
	16032-KSC-D11		-	-	-	1	-		

Ref. No.	Part No.	Description	Reqd. QTY CRF250X 4	5	6	7	8	Serial No.	Parts catalogue code
12)	16032-KSC-D21	SHAFT SET, THROTTLE	-	-	-	-	1		
13	16033-MEB-671	LEVER SET, PUMP	1	1	1	-	-		
	16033-MEN-A01		-	-	-	1	1		
14	16037-MEB-671	VALVE SET, FLOATING	1	1	1	1	1		
15	16038-KRN-671	JOINT SET, FUEL	1	1	1	1	1		
16	16046-MEB-671	VALVE SET, STARTER	1	1	1	1	1		
17	16060-KSC-671	SENSOR ASSY., THROTTLE	1	1	1	1	1		
18	16080-MEB-671	BOLT, COVER	1	1	1	-	-		
	16080-HP1-601		-	-	-	1	1		
19	16081-KRN-671	BOLT, STOPPER	1	1	-	-	-		
			-	-	1	-	-	--------	FCR02A A ED
20	16083-MEB-671	SCREW, PAN	1	1	1	1	1		
21	16100-KSC-671	CARBURETOR ASSY. (FCR02A A)	1	1	-	-	-		
	16100-KSC-673		-	-	1	-	-	--------	5202237 ED
	16100-KSC-674	CARBURETOR ASSY. (FCR02A B)	-	-	1	-	-	--------	-------- ED/A,ED/B
			-	-	1	-	-	5202238	-------- ED
	16100-KSC-D12	CARBURETOR ASSY. (FCR14A A)	-	-	-	1	-		
	16100-KSC-D22	CARBURETOR ASSY. (FCR14B A)	-	-	-	-	1		
22	16112-MEB-671	VALVE, THROTTLE	1	1	1	-	-		
	16112-MEY-A11		-	-	-	1	-		
	16112-HP1-A01		-	-	-	-	1		
23	16157-MEN-671	COVER, THROTTLE	1	1	1	-	-		
	16157-MEN-A01		-	-	-	1	1		
24	16163-MEB-671	GASKET, FLOAT CHAMBER	1	1	1	1	1		
25	16165-MEB-671	HOLDER, NEEDLE JET	1	1	1	-	-		
	16165-MEY-A11		-	-	-	1	1		
26	16172-MEB-671	ROLLER	1	1	1	1	1		
27	16177-MEB-671	WASHER, PLAIN (PO)	1	1	1	1	1		
28	16178-MEB-671	WASHER, PLAIN (SUS)	1	1	1	1	1		
29	16179-KZ4-690	BINDER	1	1	-	-	-		
			-	-	1	-	-	--------	FCR02A A ED
	16178-MEN-851		-	-	1	-	-	--------	-------- ED/A,ED/B
			-	-	1	-	-	FCR02A B	-------- ED
			-	-	-	1	1		
30	16179-428-670	BINDER	1	1	-	-	-		
			-	-	1	-	-	--------	FCR02A A ED
	16179-KSC-671		-	-	1	-	-	--------	-------- ED/A,ED/B
			-	-	1	-	-	FCR02A B	-------- ED
			-	-	-	1	1		
31	16185-MEN-671	PLATE, BUFFER	1	1	1	1	1		
32	16196-MEB-671	TUBE, OVERFLOW	1	1	-	-	-		
			-	-	1	-	-	--------	FCR02A A ED
	16196-MEN-851		-	-	1	-	-	--------	-------- ED/A,ED/B
			-	-	1	-	-	FCR02A B	-------- ED
			-	-	-	1	1		
33	16197-MEB-671	TUBE, AIR VENT	1	1	1	1	1		
34	16198-MEB-671	TUBE COMP., AIR VENT	1	1	1	1	1		
35	16199-KSC-671	TUBE COMP., AIR VENT	1	1	1	1	1		
36	16234-MEN-671	NEEDLE SET, JET (NCVT)	1	1	1	-	-		
	16203-KSC-D12	NEEDLE SET, JET	-	-	-	1	1		
37	93892-04008-18	SCREW-WASHER, 4X8	4	4	4	4	4		
38	93892-04014-18	SCREW-WASHER, 4X14	4	4	4	4	4		
39	95002-02079	CLIP, TUBE (B7)	5	5	5	5	5		

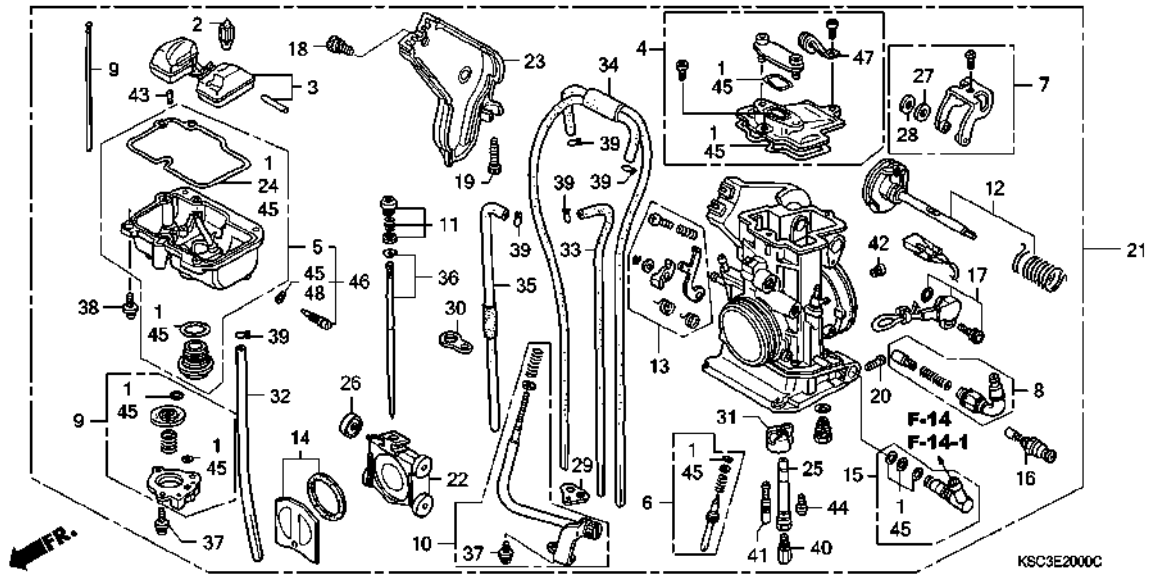

Ref. No.	Part No.	Description	Reqd. QTY CRF250X 4	5	6	7	8	Serial No.	Parts catalogue code
40	99101-357-1300	JET, MAIN, #130	1	1	1	-	-		
	99101-357-1320	JET, MAIN, #132	-	-	-	1	1		
41	99103-440-0400	JET, SLOW, #40	1	1	1	-	-		
	99103-440-0420	JET, SLOW, #42	-	-	-	1	1		
42	99104-MEB-1000	JET, SLOW AIR, #100	1	1	1	1	-		
43	99108-MEB-0550	JET, LEAK, #55	1	1	1	-	-		
	99108-KSE-0600	JET, LEAK, #60	-	-	-	1	1		
44	99112-KRN-0680	JET, BY-STARTER, #68	1	1	1	1	1		
45	16010-KSC-671	GASKET SET	-	-	1	-	-	-------- --------	ED/A,ED/B
			-	-	1	-	-	FCR02A B --------	ED
			-	-	-	1	1		
46	16015-KSC-A11	CHAMBER SET, FLOAT	-	-	-	1	1		
47	16088-KRN-A01	CLIP	-	-	-	1	1		
48	16076-ND5-004	O-RING, 1.3X4.3	-	-	1	-	-	-------- --------	ED/A,ED/B
			-	-	1	-	-	FCR02A B --------	ED
			-	-	-	1	1		

EOP-1 GASKET KIT A

F 1

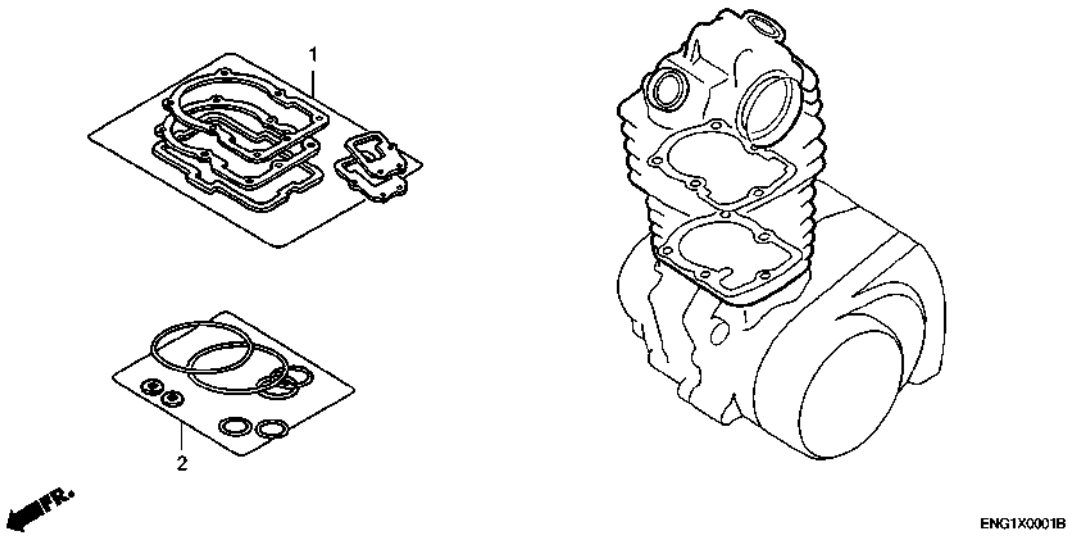

Ref. No.	L.O.N.	(Relative ref. Number) Description	F.R.T.
NO INFORMATION ----------			

Ref. No.	Part No.	Description	Reqd. QTY CRF250X 4	5	6	7	8	Serial No.	Parts catalogue code
1	06113-KSC-700	GASKET SHEET KIT A ----------	1	1	1	-	-		
	06113-KRN-710	----------							
		(COMPONENT PARTS)	-	-	-	1	-		
	12191-KRN-731	GASKET, CYLINDER ----------	1	1	1	1	-		
	12251-KRN-671	GASKET, CYLINDER HEAD -------	1	1	1	-	-		
	12251-KRN-731	----------	-	-	-	1	-		
	12391-KRN-670	GASKET, HEAD COVER ----------	1	1	1	1	-		
	14560-MEN-671	GASKET, TENSIONER LIFTER ----	1	1	1	1	-		
	18291-MM5-860	GASKET, EX. PIPE ----------	1	1	1	1	-		
2	06114-KRN-700	WASHER O-RING KIT A ---------							
		(COMPONENT PARTS)	1	1	1	1	-		
	12226-MEB-670	SEAL, RING ----------	1	1	1	1	-		
	90442-397-000	WASHER, SEALING, 6MM --------	1	1	1	1	-		
	90543-MV9-670	RUBBER, MOUNTING ----------	2	2	2	2	-		
	91303-377-000	O-RING, 13.8X2.5 ----------	1	1	1	1	-		

GASKET KIT B

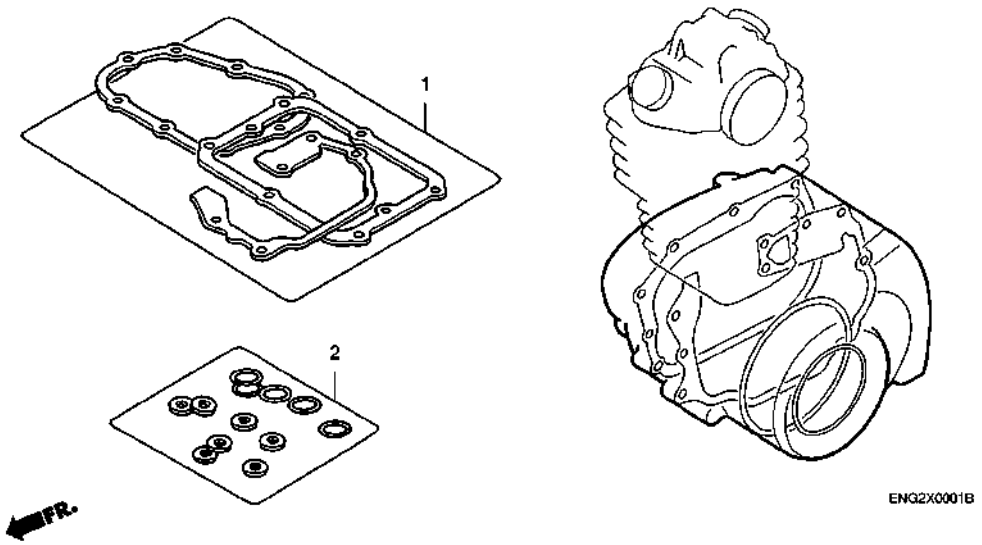

Ref. No.	L.O.N.	(Relative ref. Number) Description	F.R.T.
		NO INFORMATION ----------	

Ref. No.	Part No.	Description	Reqd. QTY CRF250X 4	5	6	7	8	Serial No.	Parts catalogue code
1	06115-KRN-700	GASKET SHEET KIT B ----------	1	1	1	-	-		
	06115-KRN-A00	----------							
		(COMPONENT PARTS)	-	-	-	1	-		
	11191-KRN-670	GASKET, CRANKCASE ----------	1	1	1	-	-		
	11191-KRN-850	----------	-	-	-	1	-		
	11352-KRN-671	GASKET, CLUTCH COVER --------	1	1	1	1	-		
	11394-KRN-670	GASKET, R. COVER ------------	1	1	1	-	-		
	11394-KRN-A00	----------	-	-	-	1	-		
	11395-KRN-670	GASKET, L. COVER ------------	1	1	1	1	-		
	19226-KRN-670	GASKET, WATER PUMP ----------	1	1	1	1	-		
2	06116-KSC-700	WASHER O-RING KIT B ---------							
		(COMPONENT PARTS)	1	1	1	1	-		
	90447-KE1-000	WASHER, SEALING, 7MM --------	2	2	2	2	-		
	90463-ML7-000	WASHER, SEALING, 6.5MM ------	2	2	2	2	-		
	90474-333-000	WASHER, SEALING, 8MM --------	2	2	2	2	-		
	90751-GK1-003	O-RING, 8.5X1.7 -------------	1	1	1	1	-		
	91301-KSR-A01	D-RING, 22MM ----------------	1	1	1	1	-		
	91302-PA9-003	O-RING, 39.8X2.2(ARAI) ------	1	1	1	1	-		
	91303-377-000	O-RING, 13.8X2.5 ------------	1	1	1	1	-		
	91304-MJ0-003	O-RING, 15.8X2.4(SHOWA) -----	1	1	1	1	-		
	91305-KF0-003	O-RING, 27X2(ARAI) ----------	1	1	1	1	-		
	91307-035-000	O-RING, 18X3 ----------------	1	1	1	1	-		
	91312-KE7-003	O-RING, 19X3(NOK) -----------	1	1	1	1	-		
	91370-461-000	O-RING, 11.9X2.2 ------------	1	1	1	1	-		

F-1 HEADLIGHT

G 1

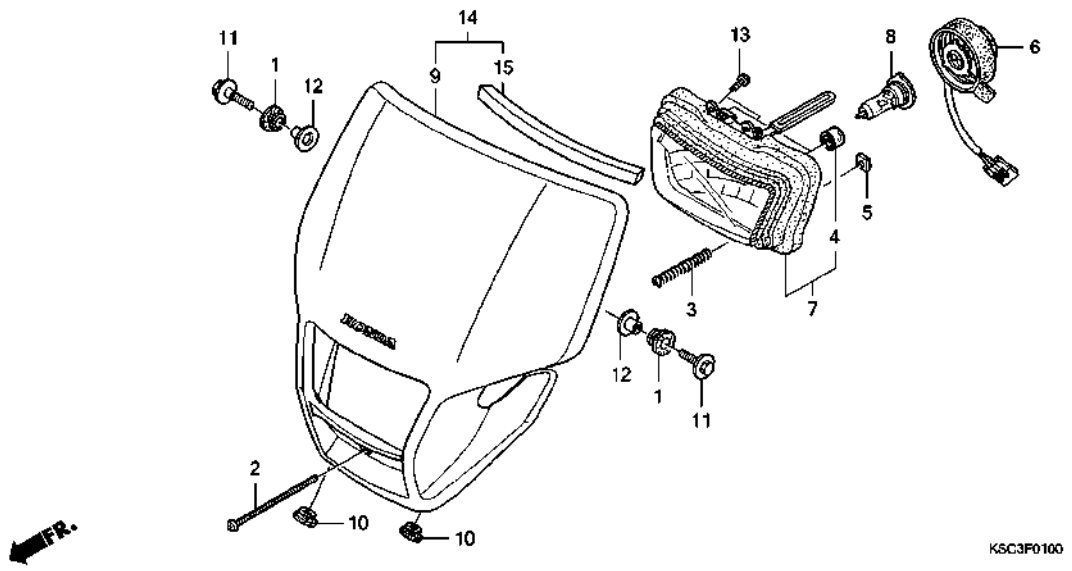

Ref. No.	L.O.N.	(Relative ref. Number) Description	F.R.T.
6	6161B1	SOCKET, HEADLIGHT	0.1
7	6161A7	HEADLIGHT UNIT	0.2
8	616118	BULB, HEADLIGHT	0.1
9	4111L3	COWL, FRONT CENTER	0.2

Ref. No.	Part No.	Description	Reqd. QTY CRF250X 4	5	6	7	8	Serial No.	Parts catalogue code
1	18293-GZ5-000	RUBBER, PROTECTOR PACKING	2	2	2	2	2		
2	33103-KSC-670	SCREW, PAN, 4X55	1	1	1	1	1		
3	33107-KAE-770	SPRING, BEAM ADJUSTING	1	1	1	-	-		
	33107-KAE-771		-	-	-	1	1		
4	33113-MBW-D21	PIPE, CP	2	2	2	2	2		
5	33117-KBR-730	NUT, BEAM ADJUSTING	1	1	1	1	1		
6	33130-KSC-672	SOCKET COMP., HEADLIGHT	1	1	-	-	-		
	33130-MEY-670		-	-	1	1	-		
	33130-KSC-A21		-	-	-	-	1		
7	33150-KSC-673	HEADLIGHT UNIT COMP.	1	1	1	1	-		
	33150-KSC-A21		-	-	-	-	1		
8	34901-GJ1-003	BULB, HEADLIGHT (12V 35/36.5W)	1	1	1	1	1		
9	61300-KSC-000ZA	VISOR SET, FR. (WL) *NH196*.....ROSS WHITE	1	1	1	1	-		
10	83501-MG7-000	GROMMET, SIDE COVER	2	2	2	2	2		
11	90147-KPB-J10	BOLT, FLANGE, 6X16	2	2	2	2	2		
12	90501-124-000	WASHER, FR. COVER SETTING	2	2	2	2	2		
13	93911-25120	SCREW, TAPPING, 5X10(PO)	2	2	2	2	2		
14	61300-KSC-A20ZA	VISOR SET, FR. (WL) *NH196*.....ROSS WHITE	-	-	-	-	1		
15	61302-KSC-A20	RUBBER, LIGHT FOAM	-	-	-	-	1		

3

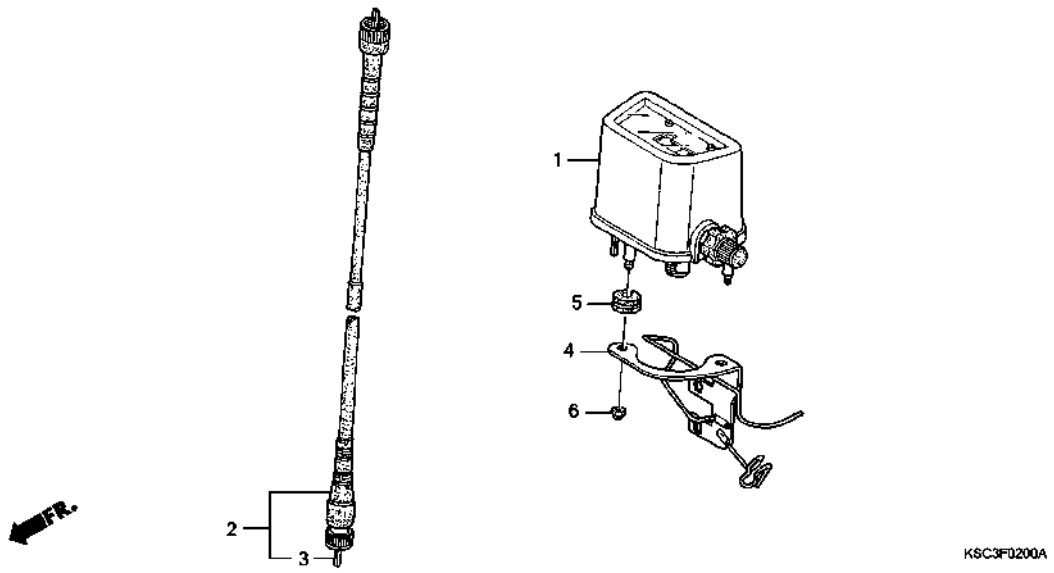

Ref. No.	L.O.N.	(Relative ref. Number) Description	F.R.T.
1	8121F4	METER ASSY., TRIP	0.2
2	811160	CABLE, SPEEDOMETER	0.2
3	8111B2	CABLE, SPEEDOMETER INNER	0.1

Ref. No.	Part No.	Description	Reqd. QTY CRF250X 4	5	6	7	8	Serial No.	Parts catalogue code
1	37200-MN1-731	METER ASSY., TRIP (KM)	1	1	1	1	1		
2	44830-KSC-000	CABLE ASSY., SPEEDOMETER	1	1	1	1	1		
3	44831-KSC-300	CABLE, INNER	1	1	1	1	1		
4	50130-KSC-000	STAY, COUPLER	1	-	-	-	-		
			-	1	-	-	-	-------- --------	DK
			-	1	-	-	-	-------- 5K112229	ED
	50130-KSC-010		-	1	-	-	-	5K112230 --------	ED
			-	-	1	1	1		
5	80103-GJ5-000	GROMMET, ENGINE COVER	2	2	2	2	2		
6	94021-05000-0S	NUT, CAP, 5MM	2	2	2	2	2		

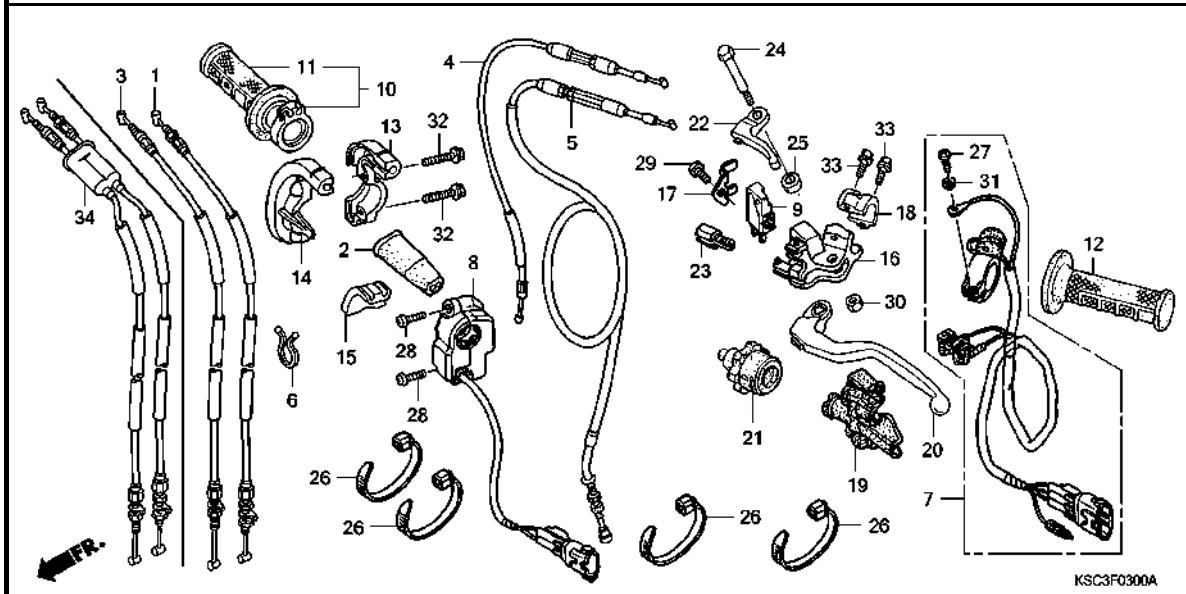

Ref. No.	L.O.N.	(Relative ref. Number) Description	F.R.T.
1		(3,34)	
	811100	CABLE, THROTTLE	0.7
		.NOTE: Same time for two units	
4	8111B5	CABLE, HOT STARTER	0.7
5	811115	CABLE, CLUTCH	0.2
7	6151D8	SWITCH, ENGINE STOP	0.2
8	615116	SWITCH, STARTER	0.2
9	6151A9	SWITCH, CLUTCH	0.1
10	810150	GRIP, THROTTLE	0.1
11	8101C1	GRIP, HANDLE :RIGHT	0.2
12	8101C0	GRIP, HANDLE :LEFT	0.1
13		(14)	
	810155	HOUSING, THROTTLE	0.2
		.NOTE: Same time for two units	
16	8101C8	BRACKET, HANDLE LEVER :LEFT ..	0.2
20	8101C6	LEVER, HANDLE :LEFT	0.1
	8101F5	LEVER, HANDLE :BOTH	0.2
22	8101F2	LEVER, HOT STARTER	0.1

Ref. No.	Part No.	Description	Reqd. QTY CRF250X 4	5	6	7	8	Serial No.	Parts catalogue code
1	17910-KSC-000	CABLE COMP. A, THROTTLE	1	1	1	-	-		
2	17913-KB7-000	COVER, THROTTLE CABLE	1	1	1	-	-		
3	17920-KSC-000	CABLE COMP. B, THROTTLE	1	1	1	-	-		
4	17950-KSC-000	CABLE COMP., HOT STARTER	1	1	-	-	-		
			-	-	1	-	-	-------- --------	ED
	17950-KSC-010	.....	-	-	1	-	-	-------- --------	ED/A,ED/B
			-	-	-	1	1		
5	22870-KSC-000	CABLE COMP., CLUTCH	1	1	1	1	1		
6	32171-GF9-621	LOCK, PURSE	1	1	1	1	1		
7	35130-KSC-670	SWITCH ASSY., ENGINE STOP ...	1	1	1	-	-		
	35130-KSC-A10	.....	-	-	-	1	1		
8	35150-KSC-671	SWITCH ASSY., STARTER	1	1	1	1	1		
9	35340-ML4-005	SWITCH ASSY., FR. STOP (TATEISHI)	1	1	1	1	1		
10	53140-MEB-671	GRIP COMP., THROTTLE	1	1	1	1	1		
11	53165-GBF-J60	GRIP, R. HANDLE	1	1	1	1	1		
12	53166-GBF-J60	GRIP, L. HANDLE	1	1	1	1	1		
13	53167-MEB-671	HOUSING, UPPER THROTTLE	1	1	-	-	-		
			-	-	1	-	-	--------	6K210470 ED/A
			-	-	1	-	-	--------	6M220000 ED
	53167-MEB-672	.....	-	-	1	-	-	-------- --------	ED/B
			-	-	1	-	-	6K210471 --------	ED/A
			-	-	1	-	-	6M220001 --------	ED
			-	-	-	1	1		
14	53168-KSC-000	HOUSING, UNDER THROTTLE	1	1	-	-	-		
			-	-	1	-	-	--------	6K210470 ED/A
			-	-	1	-	-	--------	6M220000 ED

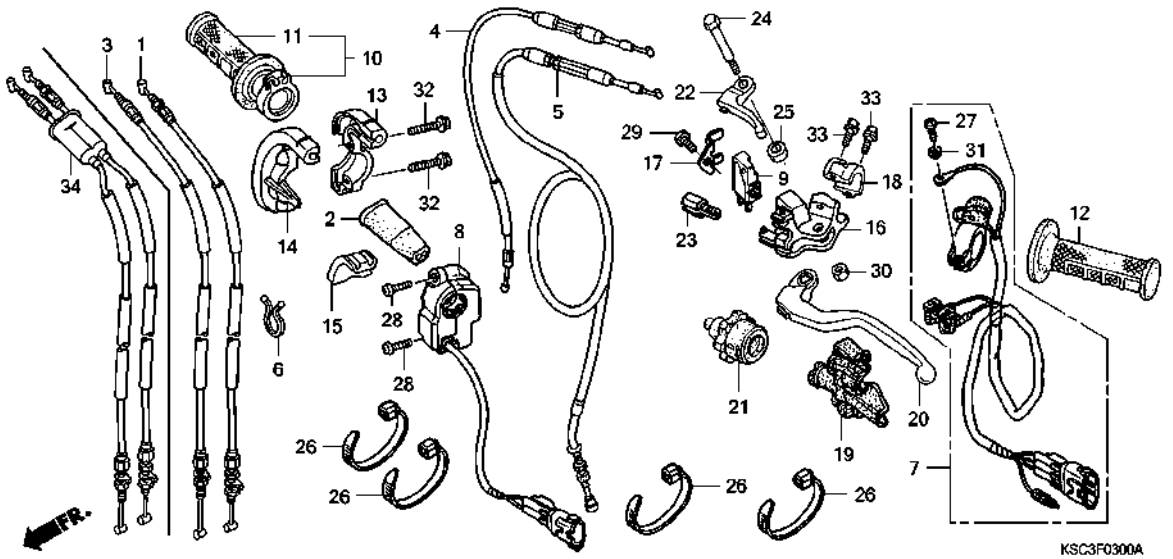

Ref. No.	Part No.	Description	Reqd. QTY CRF250X 4	5	6	7	8	Serial No.	Parts catalogue code
14)	53168-KSC-010	HOUSING, UNDER THROTTLE -----	-	-	1	-	-	-------- --------	ED/B
			-	-	1	-	-	6K210471 --------	ED/A
			-	-	1	-	-	6M220001 --------	ED
			-	-	-	1	1		
15	53169-MEB-670	SLIDER, THROTTLE CABLE ------	1	1	1	1	1		
16	53172-KSC-000	BRACKET, L. HANDLE LEVER ----	1	1	1	1	1		
17	53173-KSC-000	PLATE, CLUTCH SWITCH --------	1	1	1	1	1		
18	53174-KCE-670	HOLDER, L. LEVER BRACKET ----	1	1	1	1	1		
19	53177-KSC-000	COVER, L. HANDLE LEVER ------	1	1	1	1	1		
20	53178-KSC-000	LEVER, L. STEERING HANDLE ---	1	1	1	1	1		
21	53179-MEN-671	DIAL, CLUTCH CABLE ADJUSTING	1	1	1	1	1		
22	53190-MEN-670	LEVER, HOT STARTER ----------	1	1	1	1	1		
23	53192-MEN-670	BOLT, WIRE ADJUSTING --------	1	1	1	1	1		
24	90113-MEN-670	BOLT, HANDLE LEVER PIVOT ----	1	1	-	-	-		
			-	-	1	-	-	--------	6M200030 ED
	90113-MEY-A00	----------	-	-	1	-	-	-------- --------	ED/A,ED/B
			-	-	1	-	-	6M200031 --------	ED
	90113-MEY-A10	----------	-	-	-	1	1		
25	90501-MEN-670	COLLAR, PIVOT ----------	1	1	1	1	1		
26	90650-KV6-003	BAND, WIRE ----------	4	4	4	4	4		
27	93500-04012-1A	SCREW, PAN, 4X12 ----------	1	1	1	1	1		
28	93500-04014-0G	SCREW, PAN, 4X14 ----------	2	2	2	2	2		
29	93500-05010-0A	SCREW, PAN, 5X10 ----------	1	1	1	1	1		
30	94001-06000-0S	NUT, HEX., 6MM ----------	1	1	-	-	-		
			-	-	1	-	-	--------	6M200030 ED

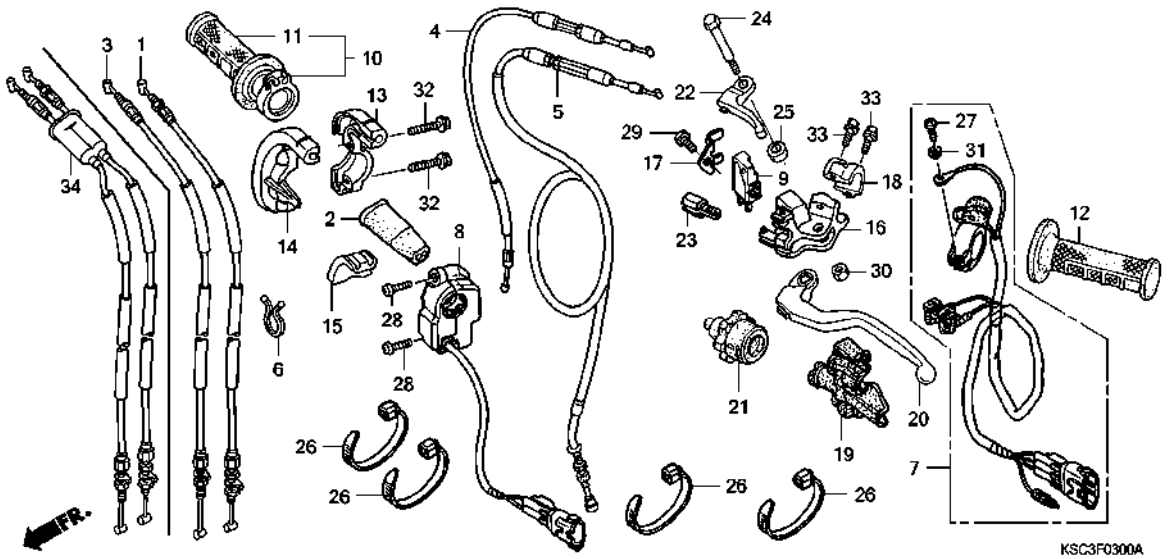

Ref. No.	Part No.	Description	Reqd. QTY CRF250X 4	5	6	7	8	Serial No.	Parts catalogue code
30)	90301-782-000	NUT, U, 6MM ----------	-	-	1	-	-	-------- --------	ED/A,ED/B
			-	-	1	-	-	6M200031 --------	ED
			-	-	-	1	1		
31	94111-04000	WASHER, SPRING, 4MM ----------	1	1	1	1	1		
32	96001-06018-07	BOLT, FLANGE, 6X18 ----------	2	2	2	-	-		
	96001-06020-07	BOLT, FLANGE, 6X20 ----------	-	-	-	2	2		
33	96001-06022-00	BOLT, FLANGE, 6X22 ----------	2	2	2	2	2		
34	17900-KSC-A10	CABLE ASSY., THROTTLE -------	-	-	-	1	1		

F-4 FR. BRAKE MASTER CYLINDER

G 6

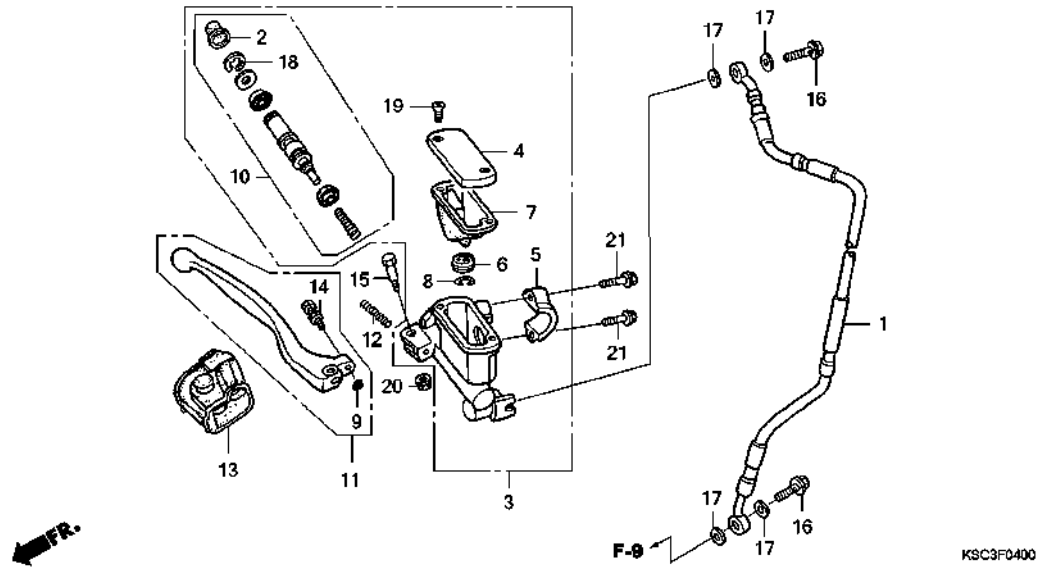

Ref. No.	L.O.N.	(Relative ref. Number) Description	F.R.T.
1	7121A0	HOSE, FRONT BRAKE	0.4
		.INCLUDES: Bleed brakes	
3	712105	CYLINDER, FRONT BRAKE MASTER .	0.4
		.INCLUDES: Bleed brakes	
7	7121G6	DIAPHRAGM, FRONT BRAKE MASTER CYLINDER	0.1
10	7121G9	PISTON SET, FRONT BRAKE MASTER	0.4
		.INCLUDES: Bleed brakes	
11	8101C7	LEVER, HANDLE :RIGHT	0.1
	8101F5	LEVER, HANDLE :BOTH	0.2

Ref. No.	Part No.	Description	Reqd. QTY CRF250X 4	5	6	7	8	Serial No.	Parts catalogue code
1	45125-KSC-000	HOSE COMP., FR. BRAKE	1	1	-	-	-		
	45125-MEY-003	.....	-	-	1	-	-		
	45125-KSC-A11	.....	-	-	-	1	1		
2	45504-KN5-006	BOOT COMP.	1	1	1	1	1		
3	45510-KCE-671	CYLINDER SUB ASSY., FR. BRAKE MASTER (NISSIN)	1	1	1	1	1		
4	45513-KCE-671	CAP, MASTER CYLINDER	1	1	1	1	1		
5	45517-GW0-751	HOLDER, MASTER CYLINDER	1	1	1	1	1		
6	45518-KA3-731	SEPARATOR COMP.	1	1	1	1	1		
7	45520-KA3-731	DIAPHRAGM	1	1	1	1	1		
8	45523-KA3-731	RING	1	1	1	1	1		
9	45523-MEB-003	RING	1	1	1	1	1		
10	45530-KCE-671	PISTON SET, MASTER CYLINDER .	1	1	1	1	1		
11	53170-MEB-003	LEVER SET, R. HANDLE	1	1	1	1	1		
12	53174-KN5-006	SPRING, BRAKE LEVER	1	1	1	1	1		
13	53176-ML3-791	COVER, R. HANDLE LEVER	1	1	1	1	1		
14	90111-MEB-003	BOLT SET, ADJUSTING	1	1	1	1	1		
15	90114-166-006	BOLT, HANDLE LEVER PIVOT	1	1	1	1	1		
16	90145-MS9-612	BOLT, OIL, 10X22	2	2	2	2	2		
17	90545-300-000	WASHER, OIL BOLT	4	4	4	4	4		
18	90651-MA5-671	CIRCLIP	1	1	1	1	1		
19	93600-04012-1G	SCREW, FLAT, 4X12	2	2	2	2	2		
20	94050-06000	NUT, FLANGE, 6MM	1	1	1	1	1		
21	96001-06022-00	BOLT, FLANGE, 6X22	2	2	2	2	2		

F-5 HANDLE PIPE/TOP BRIDGE

G 7

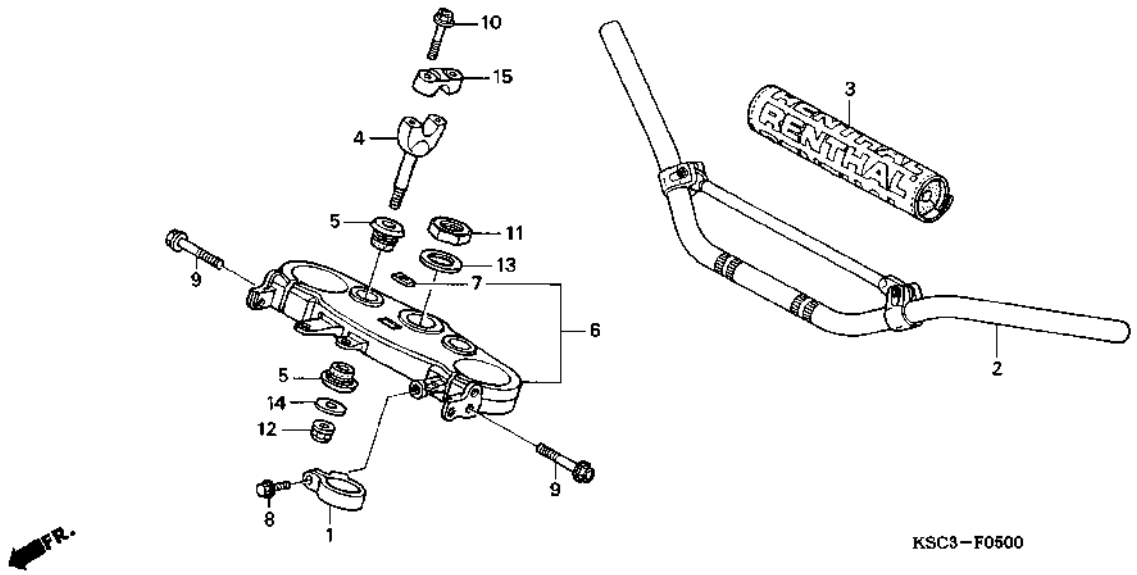

Ref. No.	L.O.N.	(Relative ref. Number) Description	F.R.T.
2	810100	PIPE, STEERING HANDLE ·····	0.4
4	8101B9	HOLDER, HANDLE :LOWER ·····	0.2
	8101B9A	.Replace 1 handle holder add ·	0.1
6	510110	BRIDGE, FORK TOP ·····	0.4

Ref. No.	Part No.	Description	Reqd. QTY CRF250X 4	5	6	7	8	Serial No.	Parts catalogue code
1	45468-KS7-830	GUIDE, FR. BRAKE HOSE ·····	1	1	1	1	1		
2	53100-MEN-670	PIPE, STEERING HANDLE ·····	1	1	1	1	1		
3	53121-MEN-670	PROTECTOR, HANDLE ·····	1	1	1	1	-		
	53121-MEN-671	·····	-	-	-	-	1		
4	53132-KZ4-J20	HOLDER, HANDLE UNDER ·····	2	2	2	2	2		
	53132-KA3-831	·····	(2)	(2)	(2)	(2)	(2)		
5	53133-KA3-832	CUSHION, HANDLE PIPE ·····	4	4	4	4	4		
6	53300-KSC-000	BRIDGE COMP., FORK TOP ·····	1	1	1	1	1		
7	86150-KPG-901	EMBLEM, PRODUCT (MARUI) ·····	1	1	1	1	1		
8	90106-MJ0-000	BOLT, FLANGE, 6X16 ·····	1	1	1	1	1		
9	90107-KZ4-J40	BOLT, FLANGE, 8X45 ·····	4	4	4	4	4		
10	90124-KZ4-J40	BOLT, FLANGE, 8X35 ·····	4	4	4	4	4		
11	90304-KZ4-J30	NUT, STEERING STEM ·····	1	1	1	1	1		
12	90306-KZ4-711	NUT, U, 10MM ·····	2	2	2	2	2		
13	90503-KZ4-J40	WASHER, STEERING STEM ·····	1	1	1	1	1		
14	90507-KA3-830	WASHER, PLAIN, 10MM ·····	2	2	2	2	2		
15	95014-22100	HOLDER B1, HANDLE PIPE UPPER	2	2	2	2	2		

3

STEERING STEM

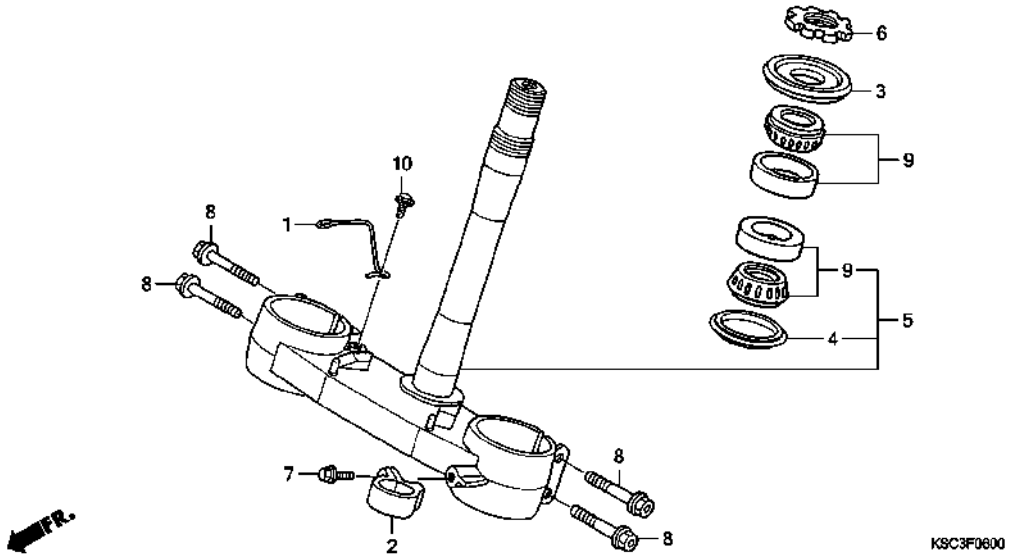

Ref. No.	L.O.N.	(Relative ref. Number) Description	F.R.T.
5	510100	STEM OR SHAFT ASSY., STEERING	0.7
6	5101B2	THREAD, STEERING HEAD TOP ····	0.3
9	5101B6	BEARING, HEAD PIPE :UPPER ····	0.7
	5101B7	BEARING, HEAD PIPE :LOWER ····	0.9
	5101C7	BEARING, HEAD PIPE :BOTH ·····	0.9

Ref. No.	Part No.	Description	Reqd. QTY CRF250X 4	5	6	7	8	Serial No.	Parts catalogue code
1	44832-KSC-000	GUIDE, SPEEDOMETER CABLE ····	1	1	-	-	-		
	44832-KSC-A00	·····	-	-	1	1	1		
2	45468-KS7-830	GUIDE, FR. BRAKE HOSE ·····	1	1	1	1	1		
3	53214-KZ3-861	DUST SEAL, STEERING HEAD (ARAI)	1	1	1	1	1		
4	53214-KZ4-701	DUST SEAL, STEERING HEAD (ARAI)	1	1	1	1	1		
5	53219-KSC-000	STEM SUB ASSY., STEERING ····	1	1	1	1	1		
6	53229-KZ4-J30	THREAD, STEERING HEAD TOP ···	1	1	1	1	1		
7	90106-MJ0-000	BOLT, FLANGE, 6X16 ·····	1	1	1	1	1		
8	90107-KZ4-J40	BOLT, FLANGE, 8X45 ·····	4	4	4	4	4		
9	91015-KZ4-701	BEARING, HEAD PIPE (NTN) ····	2	2	2	2	2		
10	95701-06010-00	BOLT, FLANGE, 6X10 ·····	1	1	1	1	1		

FRONT FENDER

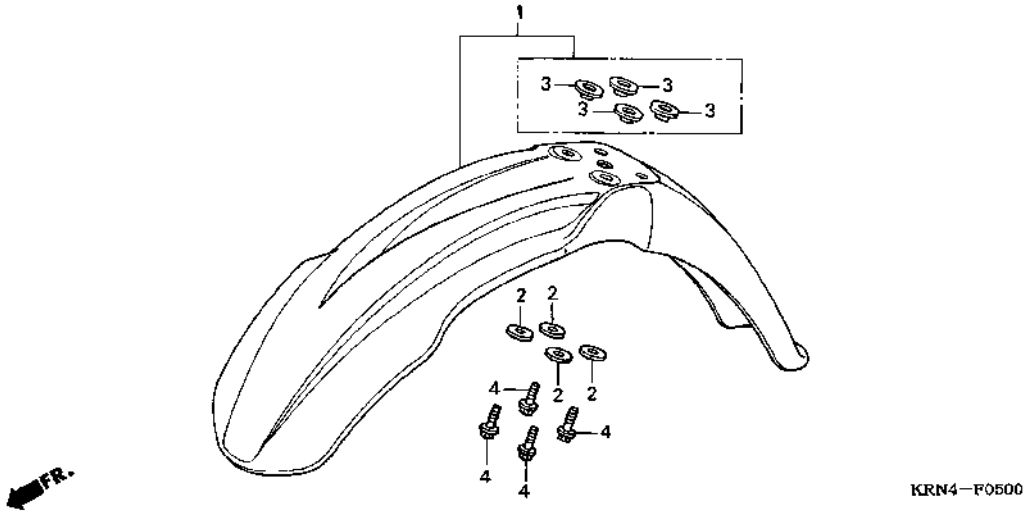

Ref. No.	L.O.N.	(Relative ref. Number) Description	F.R.T.
1	4131B7	FENDER, FRONT	0.1

Ref. No.	Part No.	Description	Reqd. QTY CRF250X 4	5	6	7	8	Serial No.	Parts catalogue code
1	61110-MEN-670	FENDER SUB ASSY., FR.	1	1	1	1	1		
2	90506-430-000	WASHER, FENDER MOUNTING	4	4	4	4	4		
3	90512-KZ4-J20	COLLAR, FR. FENDER	4	4	4	4	4		
4	96001-06016-00	BOLT, FLANGE, 6X16	4	4	4	4	4		

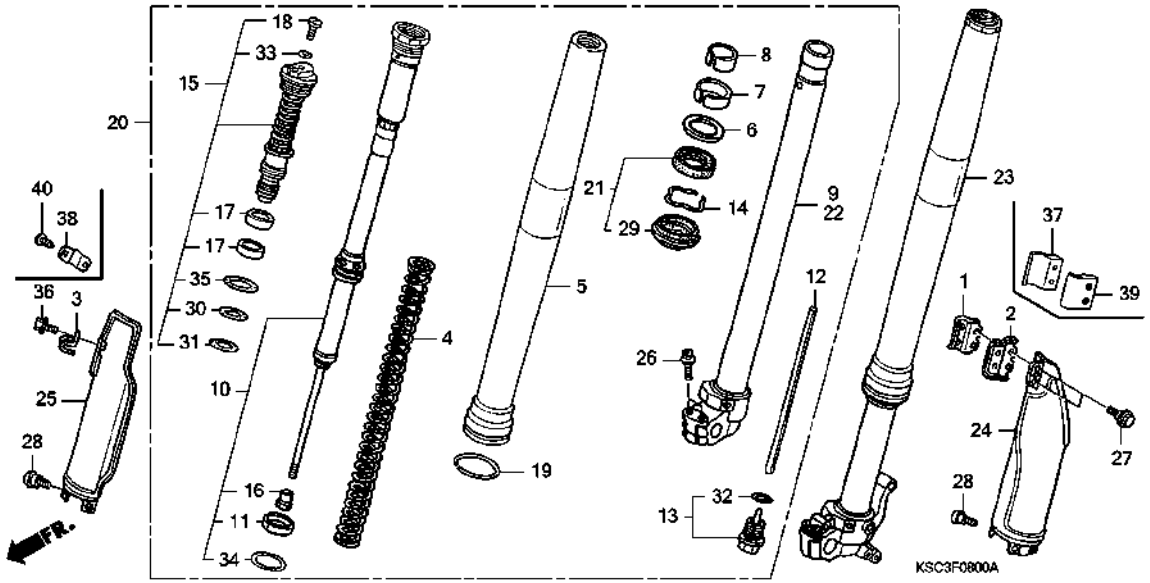

Ref. No.	L.O.N.	(Relative ref. Number) Description	F.R.T.
4	5111C5	SPRING, FRONT FORK :LEFT -----	0.8
	5111C6	SPRING, FRONT FORK :RIGHT ----	0.8
	5111C7	SPRING, FRONT FORK :BOTH -----	1.3
5	5111C8	TUBE, OUTER :LEFT -----------	1.0
	5111C9	TUBE, OUTER :RIGHT ----------	1.0
	5111D0	TUBE, OUTER :BOTH -----------	1.7
9	5111D5	PIPE, SLIDE :RIGHT ----------	1.0
	5111D6	PIPE, SLIDE :BOTH -----------	1.7
10		(13,32)	
	5111D8	DAMPER, FRONT FORK :LEFT -----	1.0
	5111D9	DAMPER, FRONT FORK :RIGHT ----	1.0
	5111E0	DAMPER, FRONT FORK :BOTH -----	1.7
15	5111E4	BOLT, FRONT FORK :LEFT -------	1.0
	5111E5	BOLT, FRONT FORK :RIGHT ------	1.0
	5111E6	BOLT, FRONT FORK :BOTH -------	1.7
20	5111C3	FORK ASSY., FRONT :RIGHT -----	0.4
	5111C4	FORK ASSY., FRONT :BOTH ------	0.5
21		(6,7,8)	
	5111E7	SEAL SET, FRONT FORK :LEFT ---	0.9
	5111E8	SEAL SET, FRONT FORK :RIGHT --	0.9
	5111E9	SEAL SET, FRONT FORK :BOTH ---	1.5
22	5111D4	PIPE, SLIDE :LEFT -----------	1.0
	5111D6	PIPE, SLIDE :BOTH -----------	1.7
23	5111C2	FORK ASSY., FRONT :LEFT ------	0.4
	5111C4	FORK ASSY., FRONT :BOTH ------	0.5

Ref. No.	Part No.	Description	Reqd. QTY CRF250X 4	5	6	7	8	Serial No.	Parts catalogue code
1	45461-GBF-J00	CLAMPER A, FR. BRAKE HOSE ---	1	1	-	-	-		
2	45462-GBF-J00	CLAMPER B, FR. BRAKE HOSE ---	1	1	-	-	-		
3	45462-KAE-740	WIRE, SPEEDOMETER CABLE GUIDE	1	1	-	-	-		
4	51401-KSC-003	SPRING, FR. FORK (SHOWA) (4.12N/MM,0.42KGF/MM)	2	2	2	2	2		
	51402-KSC-003	SPRING, FR. FORK (SHOWA) (3.92N/MM,0.40KGF/MM)	(2)	(2)	(2)	(2)	(2)		
	51403-KSC-003	SPRING, FR. FORK (SHOWA) (4.31N/MM,0.44KGF/MM)	(2)	(2)	(2)	(2)	(2)		
5	51410-KSC-003	TUBE, OUTER ----------	2	2	-	-	-		
	51410-MEY-003	----------	-	-	2	2	2		
6	51412-KZ3-B01	RING, BACK UP ----------	2	2	2	2	2		
7	51414-KZ3-B01	BUSH, GUIDE ----------	2	2	2	2	2		
8	51415-KZ3-B01	BUSH, SLIDER ----------	2	2	2	2	2		
9	51420-KSC-003	PIPE COMP., R. SLIDE --------	1	1	-	-	-		
	51420-KSC-A01	----------	-	-	1	1	1		
10	51430-KSC-003	DAMPER COMP., FR. ----------	2	2	-	-	-		
	51430-KSC-A01	----------	-	-	2	2	2		
11	51431-KZ3-B01	BUSH B, SLIDER ----------	2	2	2	2	2		
12	51437-KZ3-J41	COLLAR, REBOUND NEEDLE ------	2	2	2	2	2		
13	51440-KSC-003	BOLT COMP., CENTER ----------	2	2	2	2	2		
14	51447-KZ3-003	RING, OIL SEAL STOPPER ------	2	2	2	2	2		
15	51450-KSC-003	BOLT ASSY., FR. FORK --------	2	2	-	-	-		
	51450-KSC-A01	----------	-	-	2	2	2		
16	51451-KZ3-B01	NUT, LOCK ----------	2	2	2	2	2		
17	51453-KZ3-B01	BUSH C, SLIDER ----------	4	4	4	4	4		

FRONT FORK

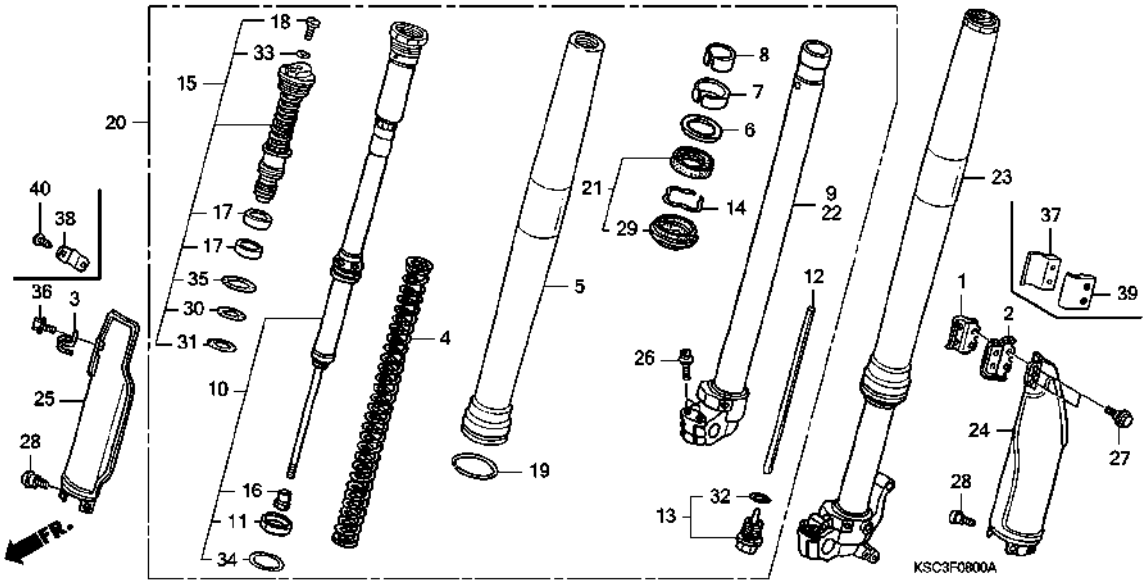

Ref. No.	L.O.N.	(Relative ref. Number) Description	F.R.T.
24	5111F4	PROTECTOR, FRONT FORK :LEFT --	0.3
	5111H6	PROTECTOR, FRONT FORK :BOTH --	0.3
25	5111F5	PROTECTOR, FRONT FORK :RIGHT -	0.2
	5111H6	PROTECTOR, FRONT FORK :BOTH --	0.3

Ref. No.	Part No.	Description	Reqd. QTY CRF250X 4	5	6	7	8	Serial No.	Parts catalogue code
18	51456-KZ3-J41	BOLT, PLUG	2	2	2	2	2		
19	51476-KZ3-711	RING, WEAR	2	2	-	-	-		
	51476-MEY-003		-	-	2	2	2		
20	51480-KSC-003	FORK SUB ASSY., R. FR.	1	1	-	-	-		
	51480-KSC-A01		-	-	1	1	-		
	51480-KSC-A21		-	-	-	-	1		
21	51490-KSC-003	SEAL SET, FR. FORK	2	2	2	2	2		
22	51520-KSC-003	PIPE COMP., L. SLIDE	1	1	-	-	-		
	51520-KSC-A01		-	-	1	1	1		
23	51580-KSC-003	FORK SUB ASSY., L. FR.	1	1	-	-	-		
	51580-KSC-A01		-	-	1	1	-		
	51580-KSC-A21		-	-	-	-	1		
24	51610-MEB-750ZA	PROTECTOR, L. FR. FORK *TNATURAL*.....NATURAL	1	1	-	-	-		
	51620-MEN-000ZA	*TNATURAL*.....NATURAL	-	-	1	1	1		
25	51620-KCZ-J70ZA	PROTECTOR COMP., R. FR. FORK *TNATURAL*.....NATURAL	1	1	-	-	-		
	51610-MEY-000ZA	PROTECTOR, R. FR. FORK *TNATURAL*.....NATURAL	-	-	1	1	1		
26	90108-KZ4-J40	BOLT, FLANGE, 8X40	4	4	4	4	4		
27	90113-KZ3-000	BOLT, FLANGE, 6MM	2	2	2	2	2		
28	90113-MAC-780	BOLT, PROTECTOR	6	6	6	6	6		
29	91254-KSC-003	DUST SEAL	2	2	2	2	2		
30	91256-KZ3-A71	O-RING, 26.7X3.5	2	2	2	2	2		
31	91257-MEB-751	O-RING, 27.7X1.9	2	2	2	2	2		
32	91258-KZ3-B01	O-RING, 18.8X1.9	2	2	2	2	2		

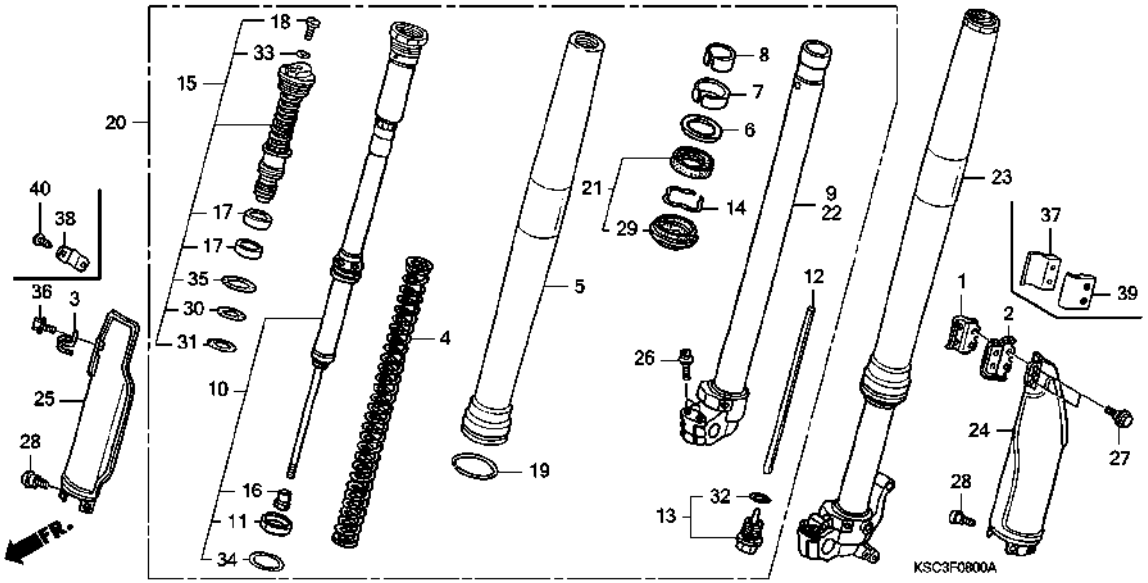

Ref. No.	Part No.	Description	Reqd. QTY CRF250X 4	5	6	7	8	Serial No.	Parts catalogue code
33	91301-KZ3-711	O-RING, 3.5X1.5	2	2	2	2	2		
34	91356-KZ3-003	O-RING, 44.7X2.4	2	2	2	2	2		
35	91356-MW0-003	O-RING, 37.2X2.4(SHOWA)	2	2	2	2	2		
36	96001-06012-00	BOLT, FLANGE, 6X12	1	1	-	-	-		
37	45461-MEN-000	CLAMPER A, FR. BRAKE HOSE	-	-	1	1	1		
38	45461-MEY-670	GUIDE, SPEEDOMETER CABLE	-	-	1	1	1		
39	45462-MEN-000	CLAMPER B, FR. BRAKE HOSE	-	-	1	1	1		
40	93913-14110	SCREW, TAPPING, 4X10	-	-	2	2	2		

FRONT BRAKE CALIPER

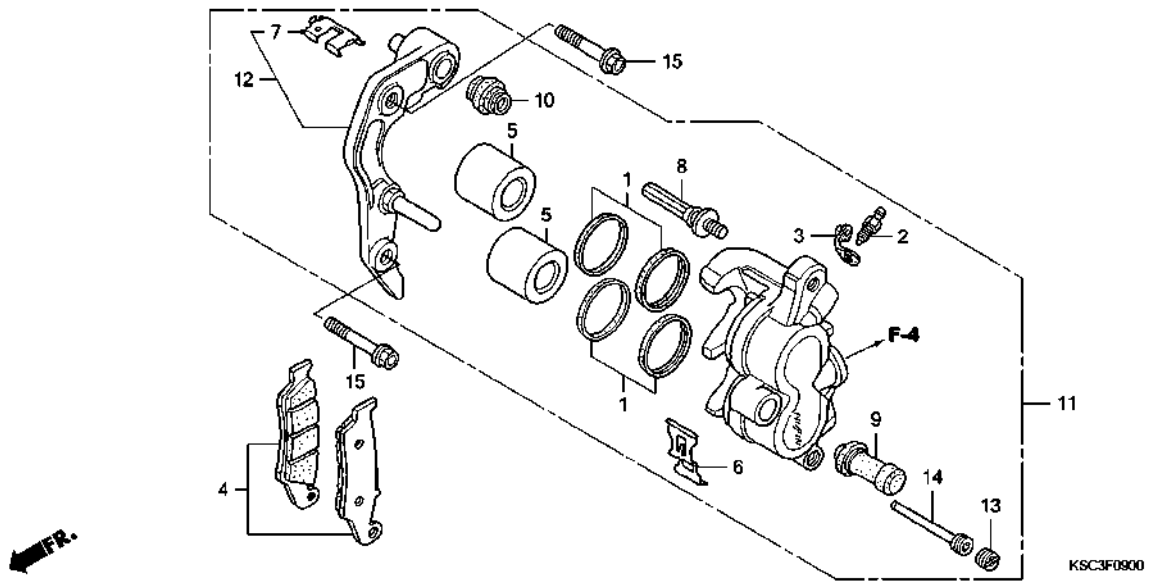

Ref. No.	L.O.N.	(Relative ref. Number) Description	F.R.T.
4	711115	SHOE(PAD) SET, BRAKE :FRONT ··	0.1
5		(1)	
	7111D1	PISTON, FRONT BRAKE CALIPER ··	0.5
		.INCLUDES: Bleed brakes	
		.NOTE: Same time for two units	
11	711130	CALIPER, FRONT BRAKE ·····	0.4
		.INCLUDES: Bleed brakes	
12	7111G0	BRACKET, FRONT CALIPER ·····	0.2

Ref. No.	Part No.	Description	Reqd. QTY CRF250X 4	5	6	7	8	Serial No.	Parts catalogue code
1	06431-MA3-405	SEAL SET, PISTON ·····	2	2	2	2	2		
2	43352-568-003	SCREW, BLEEDER (NISSIN) ·····	1	1	1	1	1		
3	43353-461-771	CAP, BLEEDER ·····	1	1	1	1	1		
4	45105-MY6-405	PAD SET, FR. ·····	1	1	1	-	-		
			-	-	-	1	-	-------- --------	ED,ED/A,U,U/A
	45105-MY6-415	·····	-	-	-	1	-	-------- --------	ED/B,U/B
			-	-	-	-	1		
5	45107-KZ4-J31	PISTON ·····	2	2	2	2	2		
6	45108-MY1-006	SPRING, PAD ·····	1	1	1	1	1		
7	45112-KS6-701	RETAINER ·····	1	1	1	1	1		
8	45131-HA5-672	BOLT A, PIN ·····	1	1	1	1	1		
9	45132-166-016	BOOT, PIN BUSH (NISSIN) ·····	1	1	1	1	1		
10	45133-MA3-006	BOOT B ·····	1	1	1	1	1		
11	45150-MEN-006	CALIPER SUB ASSY., L. FR. BRAKE (NISSIN)	1	1	1	1	1		
12	45190-MEN-006	BRACKET SUB ASSY., L. FR. CALIPER	1	1	1	1	1		
13	45203-MG3-016	PLUG, PIN ·····	1	1	1	1	1		
14	45215-HA5-672	PIN, HANGER ·····	1	1	1	1	1		
15	90110-KZ4-J40	BOLT, FLANGE, 8X40 ·····	2	2	2	2	2		

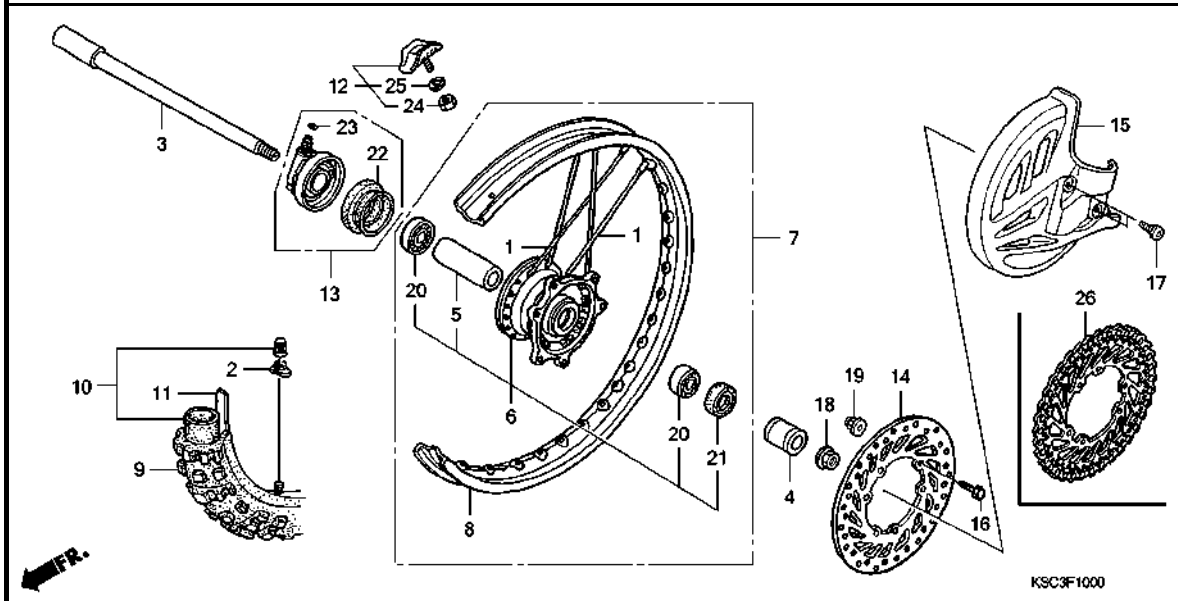

Ref. No.	L.O.N.	(Relative ref. Number) Description	F.R.T.
3	710151	AXLE, FRONT WHEEL	0.2
6	710103	HUB, FRONT WHEEL	2.4
7	7101D4	FRONT WHEEL	0.9
8	710109	RIM, WHEEL :FRONT	2.3
9		(11)	
	710139	FRONT TIRE(ONE)	0.8
10		(11)	
	710140	TUBE, FRONT TIRE(ONE)	0.8
13	710145	GEARBOX ASSY., SPEEDOMETER	0.2
14	711120	DISC, FRONT BRAKE	0.3
15	413195	COVER, FRONT DISC	0.1
20		(5)	
	710115	BEARING, FRONT WHEEL(ONE)	0.4
	710115G	.Replace 1 bearing add	0.1

Ref. No.	Part No.	Description	Reqd. QTY CRF250X 4	5	6	7	8	Serial No.	Parts catalogue code
1	06440-KZ4-J40	SPOKE SET, FR. (240MM)	36	36	36	36	36		
2	42714-KA3-710	CAP, VALVE	1	1	1	1	1		
3	44301-KSC-000	AXLE, FR. WHEEL	1	1	1	1	1		
4	44311-KZ4-J40	COLLAR, L. FR. WHEEL	1	1	1	1	1		
5	44620-MAC-680	COLLAR, FR. DISTANCE	1	1	1	1	1		
6	44635-KSC-000	HUB SUB ASSY., FR.	1	1	1	1	1		
7	44650-KSC-000	WHEEL SUB ASSY., FR.	1	1	1	1	-		
	44650-KSC-A20		-	-	-	-	1		
8	44701-MEN-003	RIM, FR. WHEEL (21X1.60)	1	1	1	1	-		
	44701-MEN-A11		-	-	-	-	1		
9	44711-MEN-004	TIRE, FR. (DUNLOP) (80/100-21 M/C 51M)	1	1	-	-	-		
			-	-	-	1	-	-------- --------	U,U/A,U/B
	44711-MEY-641	TIRE, FR. (BRIDGESTONE) (90/90-21 M/C 54R)	-	-	1	-	-		
			-	-	-	1	1	-------- --------	ED,ED/A,ED/B
	44711-MEN-J01	TIRE, FR. (DUNLOP) (80/100-21 M/C 51M)	-	-	-	-	1	-------- --------	U
10	44712-400-004	TUBE, TIRE (DUNLOP)(80/100-21)	1	1	-	-	-		
			-	-	-	1	1	-------- --------	U,U/A,U/B
	44712-KA3-711	TUBE, TIRE (BRIDGESTONE)	-	-	1	-	-		
			-	-	-	1	1	-------- --------	ED,ED/A,ED/B
11	44713-KS6-641	FLAP, TIRE (DUNLOP)(80/100-21)	1	1	-	-	-		
			-	-	-	1	1	-------- --------	U,U/A,U/B
	44713-MG7-003	FLAP, TIRE (BRIDGESTONE)	-	-	1	-	-		
			-	-	-	1	1	-------- --------	ED,ED/A,ED/B
12	44715-MA0-770	STOPPER, BEAD (1.60)	1	1	1	1	1		

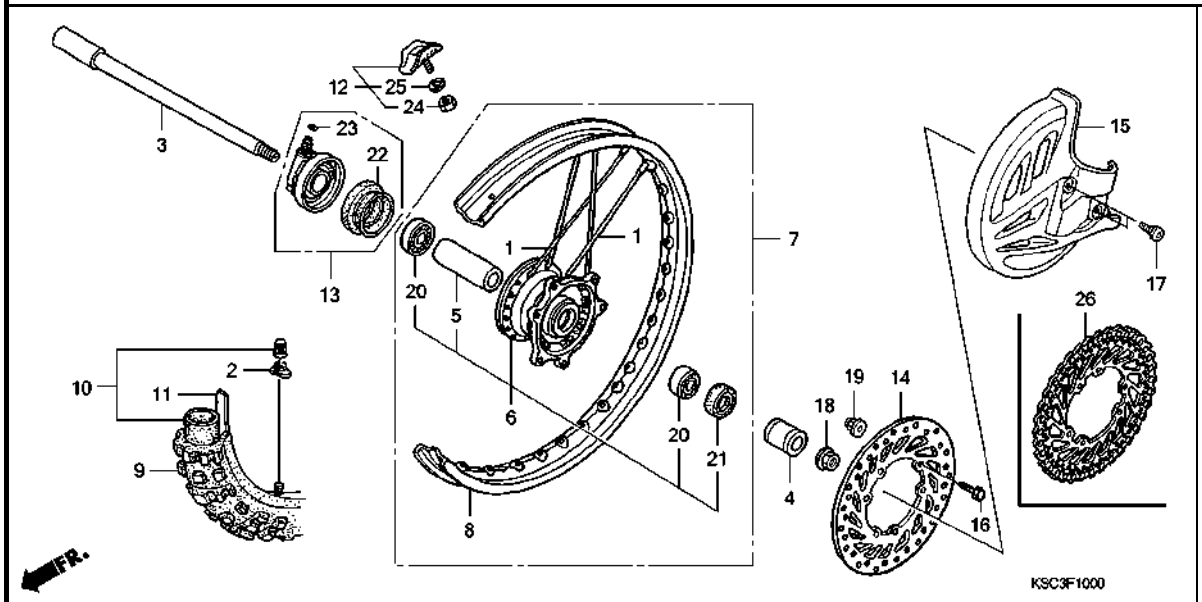

Ref. No.	Part No.	Description	Reqd. QTY CRF250X 4	5	6	7	8	Serial No.	Parts catalogue code
13	44800-KSC-003	BOX ASSY., SPEEDOMETER GEAR -	1	1	1	1	1		
14	45351-KZ4-J30	DISK, FR. BRAKE ----------	1	1	1	1	-		
15	51614-KZ4-J40ZA	COVER, FR. DISK							
		TNATURAL.....NATURAL	1	-	-	-	-	--------	-------- U
			1	-	-	-	-	--------	4K002483 ED
	51614-KZ4-J41ZA	*TNATURAL*.....NATURAL	1	-	-	-	-	4K002484	-------- ED
			-	1	1	1	1		
16	90105-MAC-680	BOLT, DISK, 6X19 ----------	6	6	6	6	6		
17	90114-MAC-780	BOLT, FR. DISK COVER -------	2	2	2	2	2		
18	90301-KZ4-J40	NUT, FR. AXLE -------------	1	1	1	1	1		
19	90301-473-003	NUT, U, 6MM ---------------	6	6	6	6	6		
20	91062-MAC-681	BEARING, RADIAL BALL, 6904 --	2	2	2	2	2		
21	91201-KS6-004	OIL SEAL, 26X37X7(ARAI) -----	1	1	1	1	1		
22	91251-KSC-003	DUST SEAL, 46X58X7 ----------	1	1	1	1	1		
23	91319-ME5-003	O-RING, 5.5X1.4 ------------	1	1	1	1	1		
24	94001-08000-0S	NUT, HEX., 8MM -------------	1	1	1	1	1		
25	94111-08000	WASHER, SPRING, 8MM --------	1	1	1	1	1		
26	45351-MEN-A10	DISK, FR. BRAKE ------------	-	-	-	-	1		

F-11 REAR BRAKE CALIPER

G16

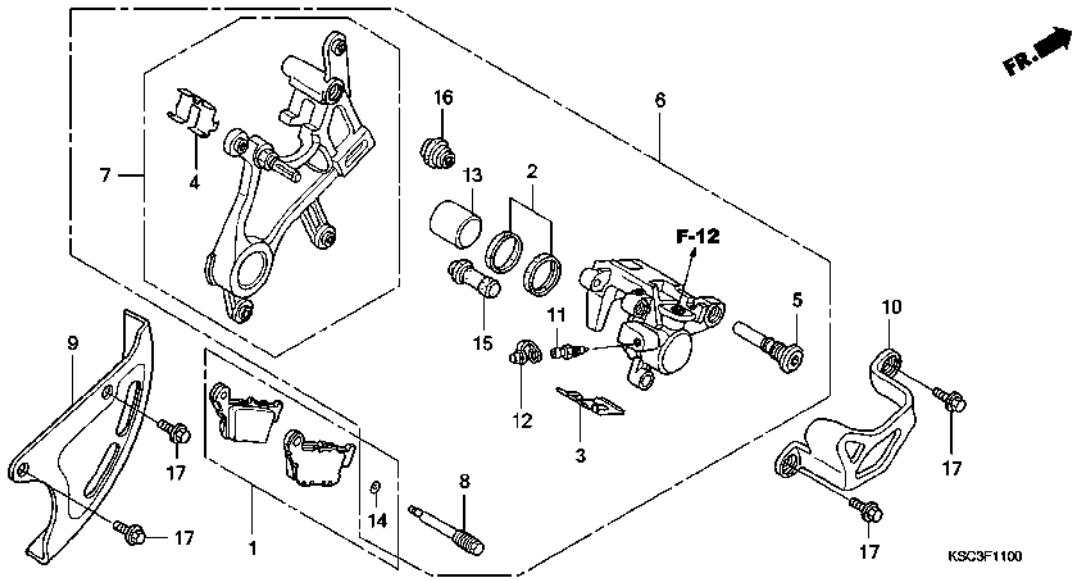

Ref. No.	L.O.N.	(Relative ref. Number) Description	F.R.T.
1	711140	SHOE(PAD) SET, BRAKE :REAR ---	0.1
6	711155	CALIPER, REAR BRAKE ----------	0.6
		.INCLUDES: Bleed brakes	
7	7111C1	BRACKET, REAR CALIPER --------	0.5
9	4131A7	COVER, REAR DISC ------------	0.4
10	7111C9	GUARD, REAR CALIPER ----------	0.1
13		(2)	
	7111D5	PISTON, REAR BRAKE CALIPER ---	0.7
		.INCLUDES: Bleed brakes	

Ref. No.	Part No.	Description	Reqd. QTY CRF250X 4	5	6	7	8	Serial No.	Parts catalogue code
1	06435-KZ4-J41	PAD SET, RR. ----------	1	-	-	-	-		
			-	1	-	-	-	-------- --------	DK
			-	1	-	-	-	-------- 5K110728	ED
	06435-KRN-711	----------	-	1	-	-	-	5K110729 --------	ED
			-	-	1	-	-		
			-	-	-	1	-	-------- --------	ED,ED/A,U,U/A
	06435-KRN-712	----------	-	-	-	1	-	-------- --------	ED/B,U/B
			-	-	-	-	1		
2	06451-MZ2-405	SEAL SET, PISTON ----------	1	1	1	1	1		
3	43108-KZ4-J41	SPRING, PAD ----------	1	1	1	1	1		
4	43112-KZ4-J41	RETAINER, BRACKET ----------	1	1	1	1	1		
5	43131-KW3-006	BOLT, PIN ----------	1	1	1	1	1		
6	43150-KZ4-J41	CALIPER SUB ASSY., RR. BRAKE (NISSIN)	1	-	-	-	-		
			-	1	-	-	-	-------- --------	DK
			-	1	-	-	-	-------- 5K110728	ED
	43150-KRN-711	----------	-	1	-	-	-	5K110729 --------	ED
			-	-	1	1	1		
7	43190-KZ4-J41	BRACKET SUB ASSY., RR. ------	1	-	-	-	-		
			-	1	-	-	-	-------- --------	DK
			-	1	-	-	-	-------- 5K110728	ED
	43190-KRN-711	----------	-	1	-	-	-	5K110729 --------	ED
			-	-	1	1	1		
8	43215-KZ4-J41	PIN, HANGER ----------	1	1	1	1	1		
9	43330-KZ4-J40ZA	COVER, RR. DISK *TNATURAL*.....NATURAL	1	1	1	1	1		
10	43340-KZ4-J40ZA	GUARD, RR. CALIPER *TNATURAL*.....NATURAL	1	1	-	-	-		

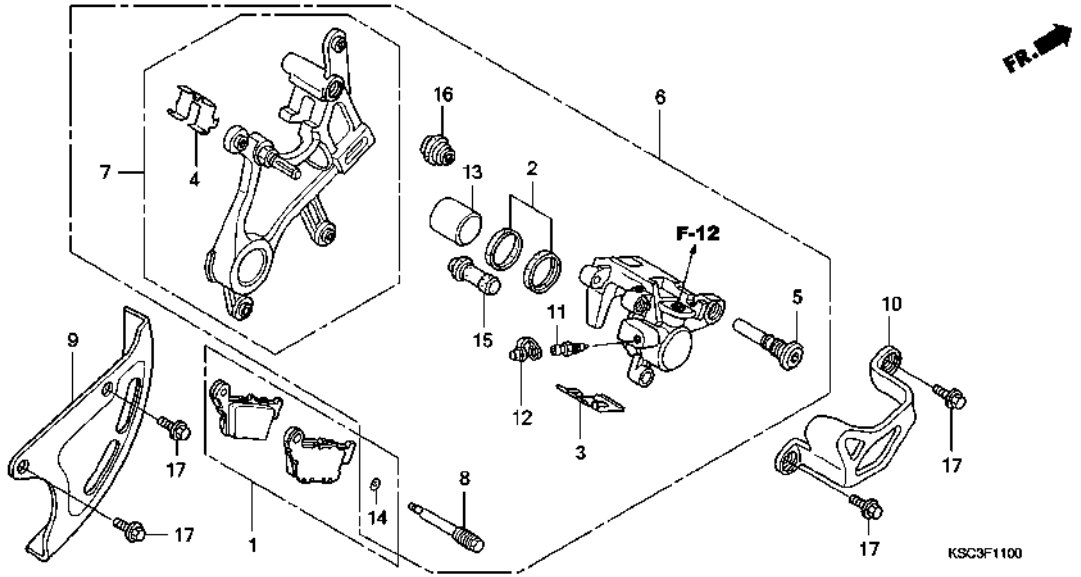

Ref. No.	Part No.	Description	Reqd. QTY CRF250X 4	5	6	7	8	Serial No.	Parts catalogue code
10)	43340-MEY-000ZA	GUARD, RR. CALIPER *TNATURAL*.....NATURAL	-	-	1	1	1		
11	43352-568-003	SCREW, BLEEDER (NISSIN) -----	1	1	1	1	1		
12	43353-461-771	CAP, BLEEDER -----	1	1	1	1	1		
13	45107-MCT-006	PISTON (22 A) -----	1	1	1	1	1		
14	45111-MAJ-G41	RING, STOPPER -----	1	1	1	1	1		
15	45132-166-016	BOOT, PIN BUSH (NISSIN) -----	1	1	1	1	1		
16	45133-MA3-006	BOOT B -----	1	1	1	1	1		
17	90004-GHB-600	BOLT, FLANGE, 6X10(NSHF) ----	4	4	4	4	4		

F-12 RR. BRAKE MASTER CYLINDER

H 2

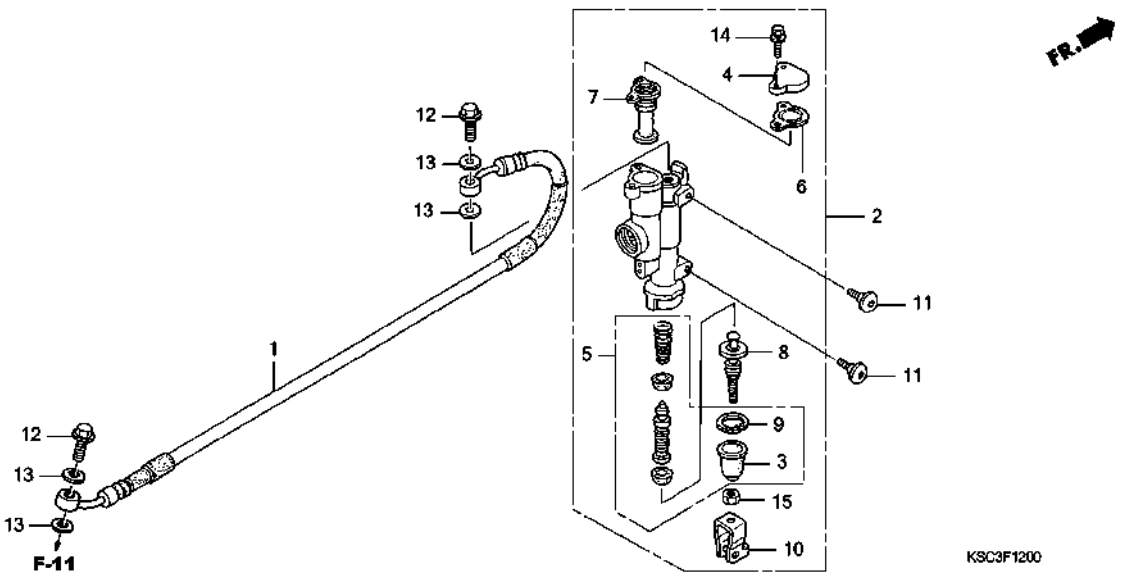

Ref. No.	L.O.N.	(Relative ref. Number) Description	F.R.T.
1	712130	HOSE, REAR BRAKE ..... .INCLUDES: Bleed brakes	0.6
2	712125	CYLINDER, REAR BRAKE MASTER .. .INCLUDES: Bleed brakes	0.4
5	7121H0	PISTON SET, REAR BRAKE MASTER .INCLUDES: Bleed brakes	0.5
7	7121G7	DIAPHRAGM, REAR BRAKE MASTER CYLINDER	0.1

Ref. No.	Part No.	Description	Reqd. QTY CRF250X 4	5	6	7	8	Serial No.	Parts catalogue code
1	43310-KZ4-J41	HOSE, RR. BRAKE	1	1	1	1	1		
2	43500-KZ4-J42	CYLINDER ASSY., RR. BRAKE MASTER (NISSIN)	1	1	1	-	-		
			-	-	-	1	-	--------- ---------	U
			-	-	-	1	-	--------- 7K310050	U/A
			-	-	-	1	-	--------- 7K310288	ED/A
	43500-KZ4-J43	.....	-	-	-	1	-	--------- ---------	ED,ED/B,U/B
			-	-	-	1	-	7K310051 ---------	U/A
			-	-	-	1	-	7K310289 ---------	ED/A
			-	-	-	-	1		
3	43504-MB2-006	BOOT COMP.	1	1	1	1	1		
4	43513-KZ4-J41	CAP, MASTER CYLINDER	1	1	1	1	1		
5	43520-KZ4-J42	PISTON SET, MASTER CYLINDER .	1	1	1	-	-		
			-	-	-	1	-	--------- ---------	U
			-	-	-	1	-	--------- 7K310050	U/A
			-	-	-	1	-	--------- 7K310288	ED/A
	43520-KZ4-J43	.....	-	-	-	1	-	--------- ---------	ED,ED/B,U/B
			-	-	-	1	-	7K310051 ---------	U/A
			-	-	-	1	-	7K310289 ---------	ED/A
			-	-	-	-	1		
6	43521-KZ4-J41	PLATE, DIAPHRAGM	1	1	1	1	1		
7	43522-KZ4-J41	DIAPHRAGM	1	1	1	1	1		
8	43530-KZ4-J41	ROD COMP., PUSH	1	1	1	1	1		
9	46182-500-013	CIRCLIP	1	1	1	-	-		
			-	-	-	1	-	--------- ---------	U
			-	-	-	1	-	--------- 7K310050	U/A
			-	-	-	1	-	--------- 7K310288	ED/A

F-12 RR. BRAKE MASTER CYLINDER

H 3

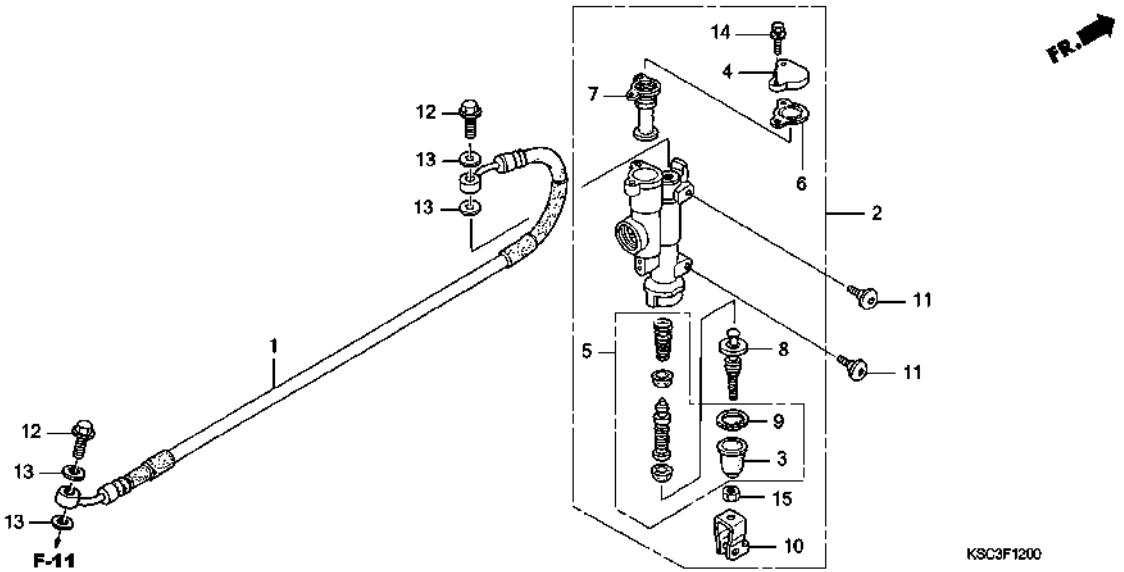

Ref. No.	Part No.	Description	Reqd. QTY CRF250X 4	5	6	7	8	Serial No.	Parts catalogue code
(9)	46182-MEL-D21	CIRCLIP	-	-	-	1	-	-------- --------	ED,ED/B,U/B
			-	-	-	1	-	7K310051 --------	U/A
			-	-	-	1	-	7K310289 --------	ED/A
			-	-	-	-	1		
10	46504-KZ4-J41	JOINT, BRAKE ROD	1	1	1	1	1		
11	90114-MAC-780	BOLT, FR. DISK COVER	2	2	2	2	2		
12	90145-MS9-612	BOLT, OIL, 10X22	2	2	2	2	2		
13	90545-300-000	WASHER, OIL BOLT	4	4	4	4	4		
14	93401-04016-00	BOLT-WASHER, 4X16	2	2	2	2	2		
15	94002-06000-0S	NUT, HEX., 6MM	1	1	1	1	1		

3

F-13 REAR WHEEL

H 4

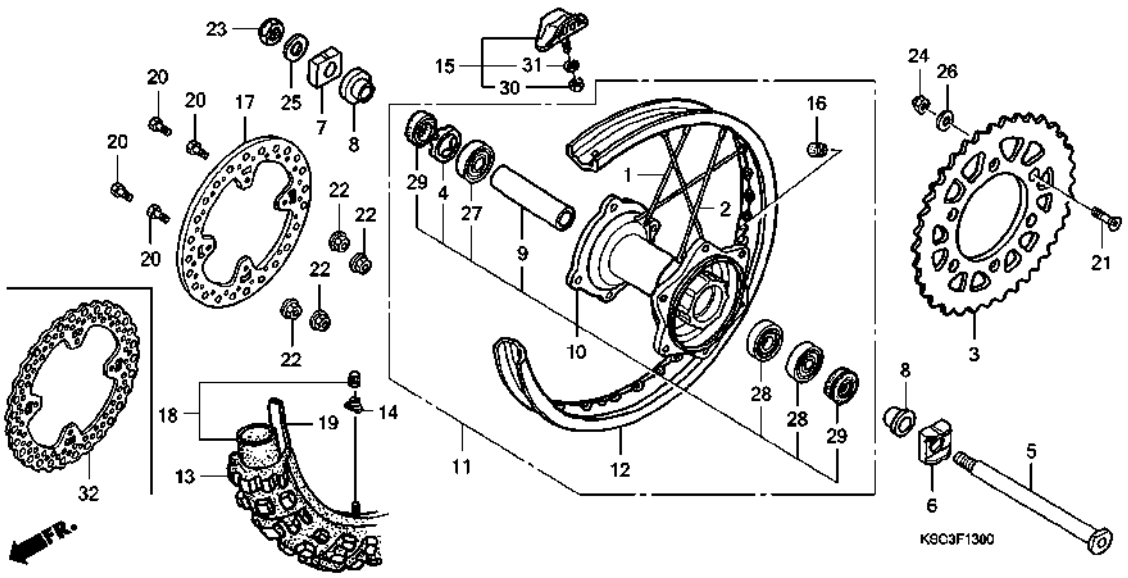

Ref. No.	L.O.N.	(Relative ref. Number) Description	F.R.T.
3	7101A0	SPROCKET, FINAL DRIVEN -------	0.4
5	710160	AXLE, REAR WHEEL ------------	0.3
10	710121	HUB, REAR WHEEL -------------	2.5
11	710118	REAR WHEEL ------------------	1.0
12	710127	RIM, WHEEL :REAR ------------	2.4
13		(19)	
	710142	REAR TIRE(ONE) --------------	0.9
17	711145	DISC, REAR BRAKE ------------	0.4
18		(19)	
	7101A7	TUBE, REAR TIRE(ONE) ---------	0.9
27		(9,28)	
	710133	BEARING, REAR WHEEL(ONE) -----	0.5
	710133G	.Replace 1 bearing add -------	0.1
	710133A	.Replace 2 bearings add ------	0.2

Ref. No.	Part No.	Description	Reqd. QTY CRF250X 4	5	6	7	8	Serial No.	Parts catalogue code
1	06420-KSC-000	SPOKE SET, RR. ------------- (INSIDE)	16	16	-	-	-		
	06420-MEY-000	------------------------- (INSIDE)	-	-	16	16	16		
2	06421-KSC-000	SPOKE SET, RR. ------------- (OUTSIDE)	16	16	-	-	-		
	06421-MEY-000	------------------------- (OUTSIDE)	-	-	16	16	16		
3	41204-KZ4-J30	SPROCKET, FINAL DRIVEN (53T)	1	1	1	1	1		
	41201-KSR-J00	SPROCKET, FINAL DRIVEN (54T)	(1)	(1)	(1)	(1)	(1)		
	41203-KZ4-J30	SPROCKET, FINAL DRIVEN (52T)	(1)	(1)	(1)	(1)	(1)		
4	41231-KZ4-J20	RETAINER, RR. WHEEL BEARING -	1	1	1	1	1		
5	42301-KZ4-J40	AXLE, RR. WHEEL ------------	1	1	1	1	1		
6	42305-KZ4-J40	COLLAR, L. RR. AXLE ---------	1	1	1	1	1		
7	42306-KZ4-J20	COLLAR, R. RR. AXLE ---------	1	1	1	1	1		
8	42311-KZ4-J40	COLLAR, RR. WHEEL SIDE ------	2	2	2	2	2		
9	42620-KZ4-J20	COLLAR, RR. WHEEL DISTANCE --	1	1	1	1	1		
10	42635-MEN-000	HUB SUB ASSY., RR. ----------	1	1	-	-	-		
	42635-KRN-710	-------------------------	-	-	1	1	1		
11	42650-KSC-000	WHEEL SUB ASSY., RR. --------	1	1	-	-	-		
	42650-MEY-000	-------------------------	-	-	1	1	-		
	42650-KSC-A20	-------------------------	-	-	-	-	1		
12	42701-KSC-003	RIM, RR. WHEEL (18X2.15) ----	1	1	1	1	-		
	42701-KSC-A21	-------------------------	-	-	-	-	1		
13	42711-KSC-004	TIRE, RR. 56)(DUNLOP) (100/100-18 5965R)	1	1	-	-	-		
			-	-	-	1	1	-------- --------	U,U/A,U/B

Ref. No.	Part No.	Description	Reqd. QTY CRF250X 4	5	6	7	8	Serial No.	Parts catalogue code
13)	42711-KSC-D01	TIRE, RR. (BRIDGESTONE) (120/90-18 M/C 65R)	-	-	1	-	-		
			-	-	-	1	1	-------- --------	ED,ED/A,ED/B
14	42714-KA3-710	CAP, VALVE	1	1	1	1	1		
15	42715-MA0-770	STOPPER, BEAD (2.15)	1	1	1	1	1		
16	42717-329-000	CAP, RIM HOLE	1	1	1	1	1		
17	43351-KZ4-J40	DISK, RR. BRAKE	1	1	1	1	-		
18	44712-300-004	TUBE, TIRE (DUNLOP) (100/100-18)	1	1	-	-	-		
			-	-	-	1	1	-------- --------	U,U/A,U/B
	44712-434-003	TUBE, TIRE (BRIDGESTONE)	-	-	1	-	-		
			-	-	-	1	1	-------- --------	ED,ED/A,ED/B
19	44713-300-004	FLAP, TIRE (DUNLOP) (100/100-18)	1	1	-	-	-		
			-	-	-	1	1	-------- --------	U,U/A,U/B
	44713-300-003	FLAP, TIRE (BRIDGESTONE)	-	-	1	-	-		
			-	-	-	1	1	-------- --------	ED,ED/A,ED/B
20	90105-MAC-680	BOLT, DISK, 6X19	4	4	4	4	4		
21	90125-KA4-000	SCREW, FLAT, 8X31	6	6	6	6	6		
22	90301-473-003	NUT, U, 6MM	4	4	4	4	4		
23	90305-KZ4-J20	NUT, U, 22MM	1	1	1	1	1		
24	90309-ML3-791	NUT, U, 8MM	6	6	6	6	6		
25	90401-KZ4-J20	WASHER, 22X35X2	1	1	1	1	1		
26	90465-MC4-000	WASHER, 8MM	6	6	6	6	6		
27	91051-KZ4-J21	BEARING, RADIAL BALL, 69052RS	1	1	1	1	1		
28	91052-KZ4-J21	BEARING, RADIAL BALL, 6905RS	2	2	2	2	2		
29	91251-KZ4-J21	DUST SEAL, 32X43X7	2	2	2	2	2		
30	94001-08000-0S	NUT, HEX., 8MM	1	1	1	1	1		
31	94111-08000	WASHER, SPRING, 8MM	1	1	1	1	1		
32	43351-MEN-A10	DISK, RR. BRAKE	-	-	-	-	1		

F-14 FUEL TANK (CRF250X4/5/6/7) H 6

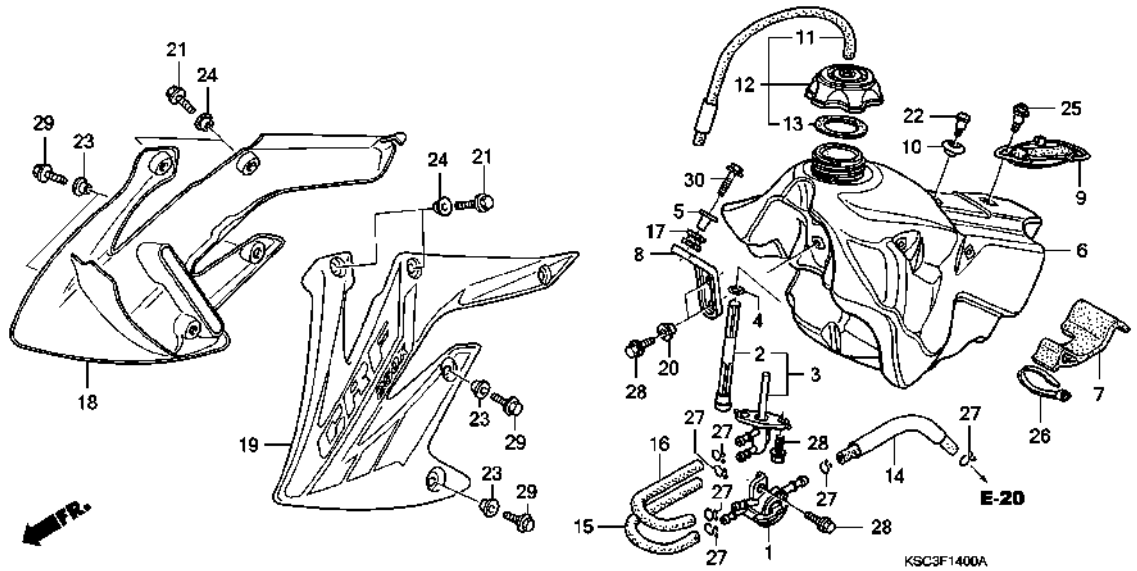

Ref. No.	L.O.N.	(Relative ref. Number) Description	F.R.T.
1	310110	COCK ASSY., FUEL	0.2
2	310115	SCREEN, FUEL STRAINER	0.3
3	3101D5	JOINT, FUEL TANK	0.3
6	310100	TANK, FUEL	0.3
18	1151A0	SHROUD, RADIATOR :RIGHT	0.1
	1151A5	SHROUD, RADIATOR :BOTH	0.1
19	115126	SHROUD, RADIATOR :LEFT	0.1
	1151A5	SHROUD, RADIATOR :BOTH	0.1

Ref. No.	Part No.	Description	Reqd. QTY CRF250X 4	5	6	7	8	Serial No.	Parts catalogue code
1	16950-KSC-003	COCK ASSY., FUEL	1	1	1	1	-		
2	16952-KCY-671	SCREEN SET, FUEL STRAINER	1	1	1	1	-		
3	16955-KSC-003	JOINT ASSY., FUEL	1	1	1	1	-		
4	16997-467-000	O-RING, 11.8X3.55	1	1	1	1	-		
5	17509-KZ3-B00	COLLAR, TANK SETTING	1	1	1	1	-		
6	17510-KSC-000	TANK COMP., FUEL	1	1	1	1	-		
7	17512-KRN-000	RUBBER, FUEL TANK MOUNTING	1	1	1	-	-		
			-	-	-	1	-	-------- --------	ED,U
	17512-KRN-010		-	-	-	1	-	-------- --------	ED/A,ED/B,U/A,U/B
8	17515-KSC-000	STAY, FR. TANK	1	1	1	1	-		
9	17516-KZ3-B00	BAND, TANK RR.	1	1	1	1	-		
10	17518-KZ4-710	COLLAR, SEAT FR.	1	1	1	1	-		
11	17521-KZ4-J20	TUBE COMP., FUEL CAP BREATHER	1	1	1	1	-		
12	17620-MEB-670	CAP ASSY., FUEL TANK	1	1	1	1	-		
13	17624-KT1-780	PACKING, FUEL CAP	1	1	1	1	-		
14	17681-KSC-000	TUBE B, FUEL	1	1	1	1	-		
15	17684-KSC-000	TUBE A, FUEL MAIN	1	1	1	1	-		
16	17685-KSC-000	TUBE A, FUEL RESERVE	1	1	1	1	-		
17	18334-ML3-680	RUBBER, SILENCER	1	1	1	1	-		
18	19071-KSC-000ZB	SHROUD SET, R. RADIATOR *TYPE1*(WL)	1	-	-	-	-		
	19071-KSC-730ZA		-	1	-	-	-		
	19071-KSC-A00ZA		-	-	1	-	-		
	19071-KSC-A10ZA		-	-	-	1	-		
19	19072-KSC-000ZB	SHROUD SET, L. RADIATOR *TYPE1*(WL)	1	-	-	-	-		

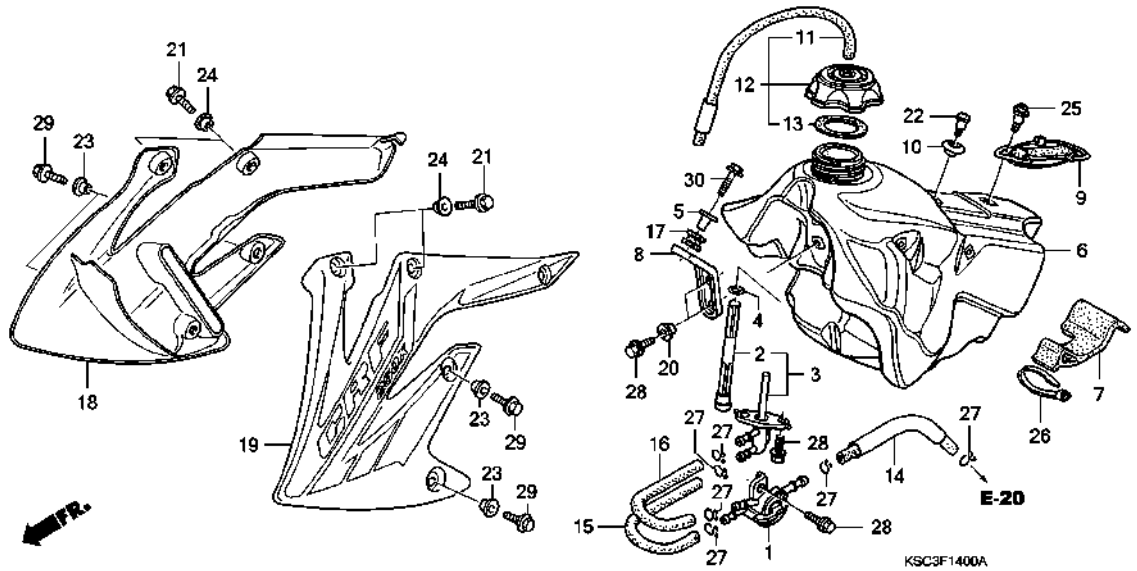

Ref. No.	Part No.	Description	Reqd. QTY CRF250X 4	5	6	7	8	Serial No.	Parts catalogue code
19)	19072-KSC-730ZA	SHROUD SET, L. RADIATOR *TYPE1*(WL)	-	1	-	-	-		
	19072-KSC-A00ZA		-	-	1	-	-		
	19072-KSC-A10ZA		-	-	-	1	-		
20	84706-415-000	COLLAR	2	2	2	2	-		
21	90106-KRN-000	BOLT, FLANGE, 5X12	4	4	4	4	-		
22	91422-MT8-770	SCREW, SPECIAL, 5MM	1	1	1	1	-		
23	90501-KZ4-J20	COLLAR A	4	4	4	4	-		
24	90502-KRN-000	COLLAR, SHROUD UPPER	4	4	4	4	-		
25	90108-MN0-000	SCREW, PAN, 5X13	1	1	1	1	-		
26	91560-MS8-600	TY-RAP, CABLE	1	1	1	1	-		
27	95002-02120	CLIP, TUBE (B12)	6	6	6	6	-		
28	96001-06016-00	BOLT, FLANGE, 6X16	5	5	5	5	-		
29	96001-06018-00	BOLT, FLANGE, 6X18	4	4	4	4	-		
30	96001-06030-00	BOLT, FLANGE, 6X30	1	1	1	1	-		

F-14-1 FUEL TANK (CRF250X8)

H 8

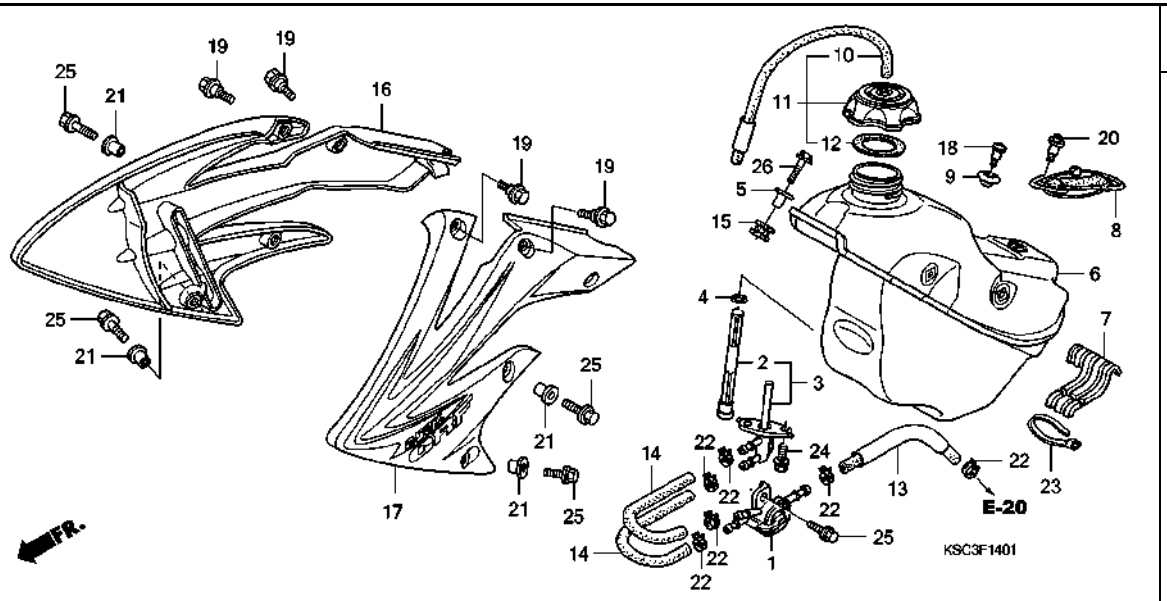

Ref. No.	L.O.N.	(Relative ref. Number) Description	F.R.T.
1	310110	COCK ASSY., FUEL	0.2
2	310115	SCREEN, FUEL STRAINER	0.3
3	3101D5	JOINT, FUEL TANK	0.3
6	310100	TANK, FUEL	0.3
16	1151A0	SHROUD, RADIATOR :RIGHT	0.1
	1151A5	SHROUD, RADIATOR :BOTH	0.1
17	115126	SHROUD, RADIATOR :LEFT	0.1
	1151A5	SHROUD, RADIATOR :BOTH	0.1

Ref. No.	Part No.	Description	Reqd. QTY CRF250X 4	5	6	7	8	Serial No.	Parts catalogue code
1	16950-KSC-A21	COCK ASSY., FUEL	-	-	-	-	1		
2	16952-KCY-671	SCREEN SET, FUEL STRAINER	-	-	-	-	1		
3	16955-KSC-A21	JOINT ASSY., FUEL	-	-	-	-	1		
4	16997-467-000	O-RING, 11.8X3.55	-	-	-	-	1		
5	17509-KZ3-B00	COLLAR, TANK SETTING	-	-	-	-	1		
6	17510-KSC-A20	TANK COMP., FUEL	-	-	-	-	1		
7	17512-KSC-A20	RUBBER, FUEL TANK MOUNTING	-	-	-	-	1		
8	17516-KZ3-B00	BAND, TANK RR.	-	-	-	-	1		
9	17518-KZ4-710	COLLAR, SEAT FR.	-	-	-	-	1		
10	17521-KZ4-J20	TUBE COMP., FUEL CAP BREATHER	-	-	-	-	1		
11	17620-MEB-670	CAP ASSY., FUEL TANK	-	-	-	-	1		
12	17624-KT1-780	PACKING, FUEL CAP	-	-	-	-	1		
13	17681-KSC-A20	TUBE B, FUEL	-	-	-	-	1		
14	17684-KSC-A20	TUBE A, FUEL	-	-	-	-	2		
15	18334-ML3-680	RUBBER, SILENCER	-	-	-	-	1		
16	19071-KSC-A2OZA	SHROUD SET, R. RADIATOR *TYPE1*(WL)	-	-	-	-	1		
17	19072-KSC-A2OZA	SHROUD SET, L. RADIATOR *TYPE1*(WL)	-	-	-	-	1		
18	90018-ZA5-000	BOLT, STATOR COVER SETTING	-	-	-	-	1		
19	90101-KRN-730	BOLT, SPECIAL, 5X9	-	-	-	-	4		
20	90105-MEN-730	SCREW, 5X12	-	-	-	-	1		
21	90501-KZ4-J20	COLLAR A	-	-	-	-	4		
22	90651-HN6-A51	CLAMP, TUBE (12.0)	-	-	-	-	6		
23	91560-MS8-600	TY-RAP, CABLE	-	-	-	-	1		

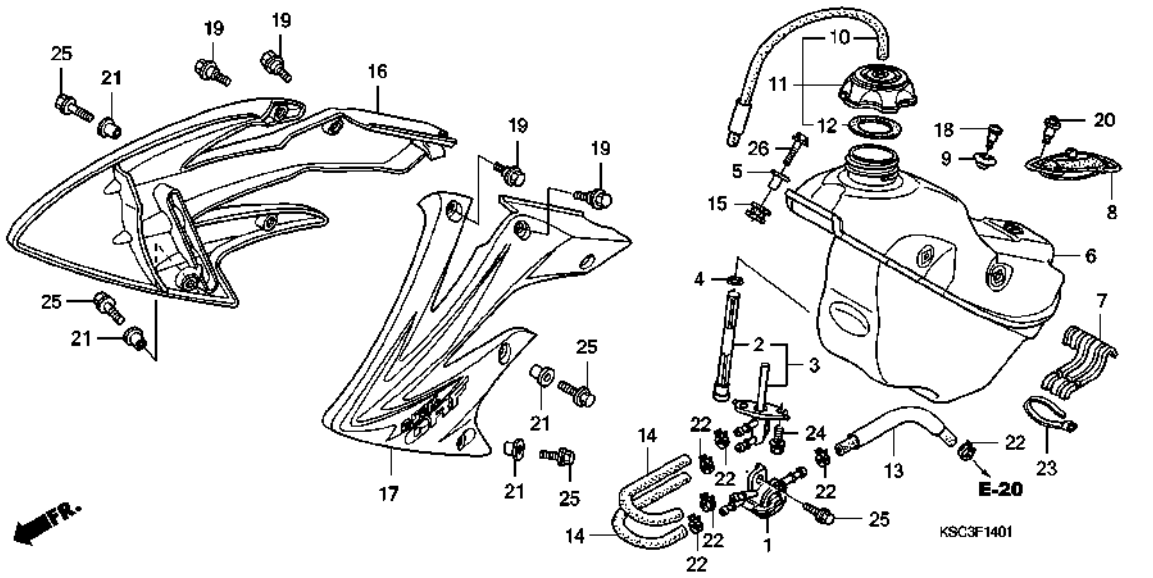

Ref. No.	Part No.	Description	Reqd. QTY CRF250X 4	5	6	7	8	Serial No.	Parts catalogue code
24	96001-06014-00	BOLT, FLANGE, 6X14 ----------	-	-	-	-	2		
25	96001-06016-00	BOLT, FLANGE, 6X16 ----------	-	-	-	-	5		
26	96001-06030-00	BOLT, FLANGE, 6X30 ----------	-	-	-	-	1		

SEAT/SIDE COVER

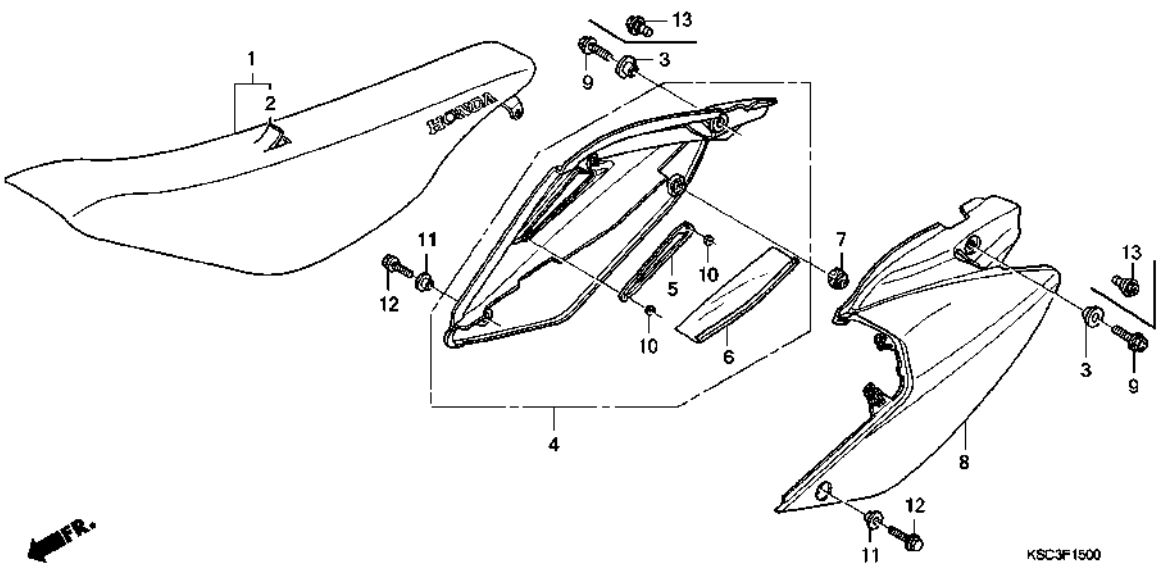

Ref. No.	L.O.N.	(Relative ref. Number) Description	F.R.T.
1	413150	SEAT	0.1
4	4111H9	COVER, SIDE :RIGHT	0.1
	4111J0	COVER, SIDE :BOTH	0.1
8	4111H8	COVER, SIDE :LEFT	0.1
	4111J0	COVER, SIDE :BOTH	0.1

Ref. No.	Part No.	Description	Reqd. QTY CRF250X 4	5	6	7	8	Serial No.	Parts catalogue code
1	77100-KSC-010	SEAT COMP.	1	1	1	-	-		
	77100-KSC-A10		-	-	-	1	-		
	77100-KSC-A11		-	-	-	-	1		
2	77101-KSC-000	LEATHER COMP., SEAT (NO LETTERS PRINTED)	1	1	1	-	-		
	77101-KSC-A10		-	-	-	1	-		
	77101-KSC-A11		-	-	-	-	1		
3	83505-KM4-000	COLLAR, TOOL BOX SETTING	2	2	2	-	-		
4	83510-KSC-000	COVER, R. SIDE	1	1	1	1	1		
5	83513-KSC-000	PLATE	1	1	1	1	1		
6	83514-KSC-000	HEAT GUARD	1	1	1	1	1		
7	83515-KS7-830	RUBBER, SIDE COVER STOPPER	1	1	1	1	1		
8	83610-KSC-000	COVER, L. SIDE	1	1	1	1	1		
9	90123-MEN-670	BOLT, FLANGE, 8X16	2	2	2	-	-		
10	90313-GAH-780	NUT, SPEED, 3MM	2	2	2	2	2		
11	90501-KZ4-J20	COLLAR A	2	2	2	2	2		
12	96001-06014-00	BOLT, FLANGE, 6X14	2	2	2	2	2		
13	90102-MEN-710	BOLT, SPECIAL, 8MM	-	-	-	2	2		

AIR CLEANER

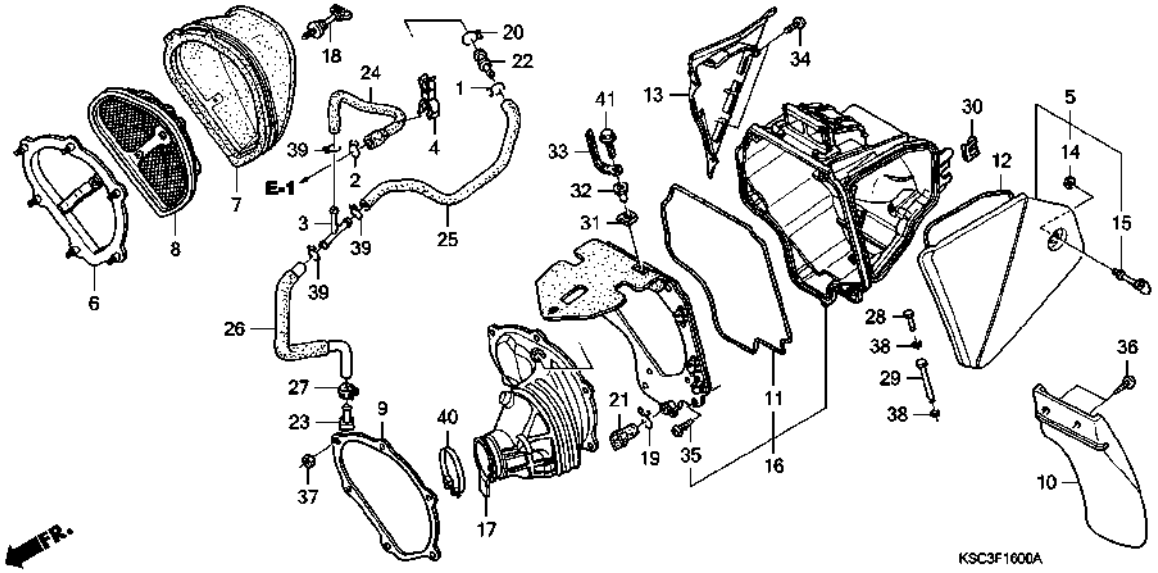

Ref. No.	L.O.N.	(Relative ref. Number) Description	F.R.T.
5	312102	COVER, AIR CLEANER CASE ------	0.1
6	3121F4	BASE, AIR CLEANER ------------	0.8
7	312105	ELEMENT, AIR CLEANER ---------	0.2
10	4131A0	MUDGUARD, AIR CLEANER CASE ---	0.1
13	3121A7	COVER, AIR CLEANER CASE SIDE :RIGHT ----------	0.2
16	3121A5	CASE, AIR CLEANER ------------	0.8
17		(11)	
	3121B6	TUBE, AIR CLEANER CONNECTING -	0.8

Ref. No.	Part No.	Description	Reqd. QTY CRF250X 4	5	6	7	8	Serial No.	Parts catalogue code
1	15707-634-000	CLIP, OIL DRAIN TUBE --------	1	1	1	1	1		
2	15771-551-000	CLIP, OIL DRAIN TUBE --------	1	1	1	1	1		
3	16959-MY1-000	JOINT, FUEL TUBE ------------	1	1	1	1	1		
4	16965-VM0-771	CLAMP, HOSE -----------------	1	1	1	1	1		
5	17211-KSC-000	COVER ASSY., AIR CLEANER ----	1	1	1	1	1		
6	17212-MEN-670	STAY, AIR CLEANER ELEMENT ---	1	1	1	1	1		
7	17213-KSC-000	ELEMENT, AIR CLEANER --------	1	1	1	1	1		
8	17214-MEN-670	BASE ASSY., ELEMENT ---------	1	1	1	1	1		
9	17217-MEB-770	PLATE, AIR CLEANER CASE FR. -	1	1	1	1	1		
10	17218-KRN-000	MUDGUARD, AIR CLEANER CASE --	1	1	1	1	1		
11	17218-KSC-000	SEAL, AIR CLEANER CASE ------	1	1	1	1	1		
12	17219-KSC-000	SEAL, AIR CLEANER COVER (A) -	1	1	1	1	1		
13	17221-KSC-000	COVER, R. SIDE --------------	1	1	1	1	1		
14	17224-KN5-670	WASHER, AIR CLEANER COVER SETTING	1	1	1	1	1		
15	17225-KN5-670	STUD, 6X21 ------------------	1	1	1	1	1		
16	17250-KSC-000	CASE COMP., AIR CLEANER -----	1	-	-	-	-	-------- --------	U
			1	-	-	-	-	-------- 4K000002	ED
	17250-KSC-010	----------	1	-	-	-	-	4K000003 --------	ED
			-	1	1	1	1		
17	17253-KSC-000	TUBE, AIR CLEANER CONNECTING	1	1	1	1	1		
18	17291-KSC-000	BOLT, ELEMENT SETTING -------	1	1	1	1	1		
19	17316-MN1-670	CLIP A, BREATHER TUBE -------	1	1	1	1	1		
20	17316-611-000	CLIP, BREATHER TUBE ---------	1	1	1	1	1		
21	17358-HA0-680	TUBE, DRAIN -----------------	1	1	1	1	1		

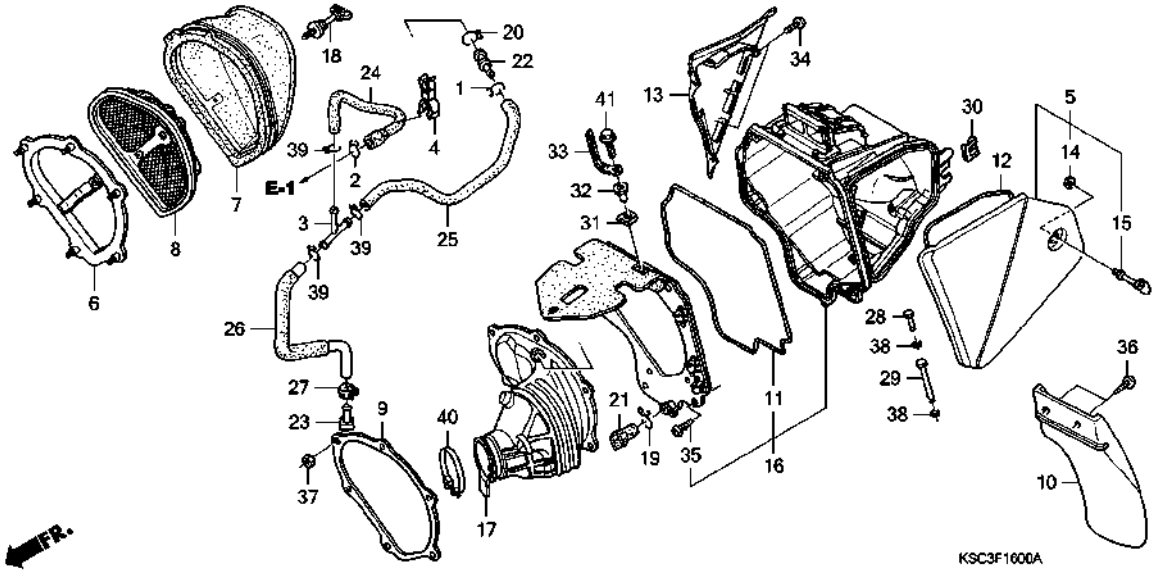

Ref. No.	Part No.	Description	Reqd. QTY CRF250X 4	5	6	7	8	Serial No.	Parts catalogue code
22	17359-MAG-L00	JOINT, BREATHER TUBE	1	1	1	1	1		
23	17370-419-700	PLUG, BREATHER TUBE	1	1	1	1	1		
24	17372-KRN-000	TUBE A, BREATHER	1	1	1	1	1		
25	17374-KRN-000	TUBE B, BREATHER	1	1	1	1	1		
26	17375-KSC-000	TUBE C, BREATHER	1	1	1	1	1		
27	43514-KS6-701	CLAMP, MASTER CYLINDER OIL HOSE	1	1	1	1	1		
28	53189-GCS-000	PIN, BRAKE LOCK LEVER PIVOT .	1	1	1	1	1		
29	64308-GG2-000	PIN, VISOR HINGE	1	1	1	1	1		
30	64508-KV3-000	PLATE, SPRING	1	1	1	1	1		
31	90305-GK8-000	NUT, CLIP, 6MM	1	1	1	1	1		
32	90501-KRN-000	COLLAR, AIR CLEANER	1	1	1	1	1		
33	91413-679-000	CLIP, 2X70	1	1	1	1	1		
34	93903-24380	SCREW, TAPPING, 4X12	2	2	2	2	2		
35	93903-25380	SCREW, TAPPING, 5X16	7	7	7	7	7		
36	93913-25410	SCREW, TAPPING, 5X16(P0)	2	2	2	2	2		
37	94002-05070-0S	NUT, HEX., 5MM	6	6	6	6	6		
38	94540-03010	E-RING, 3MM	2	2	2	2	2		
39	95002-02120	CLIP, TUBE (B12)	3	3	3	3	3		
40	95018-60321	BAND, AIR CLEANER CONNECTING TUBE (60)	1	1	1	1	1		
41	96001-06016-00	BOLT, FLANGE, 6X16	1	1	1	1	1		

EXHAUST MUFFLER

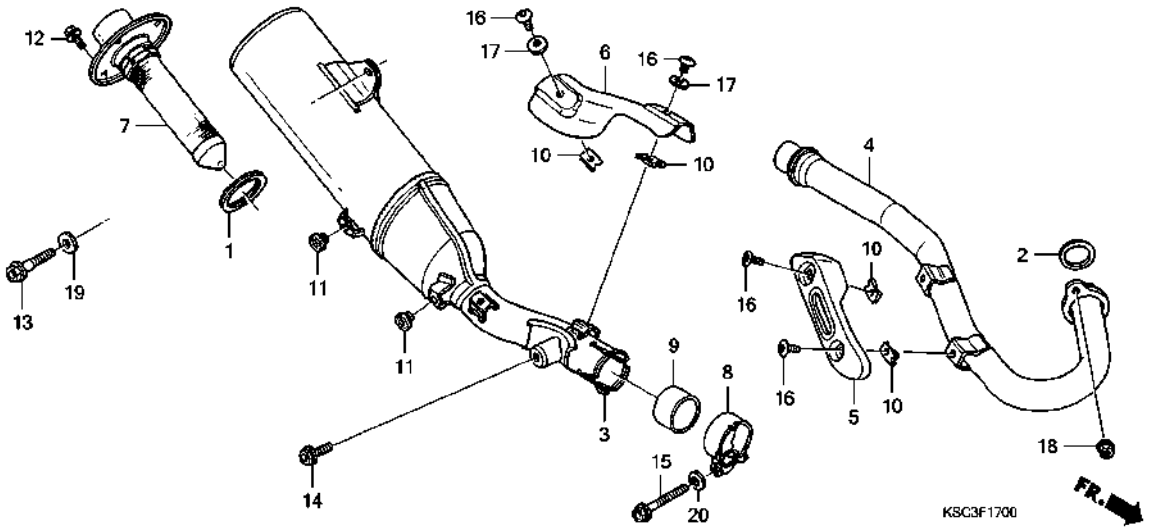

Ref. No.	L.O.N.	(Relative ref. Number) Description	F.R.T.
2	3131B4	GASKET, EXHAUST PIPE	0.2
3	313120	MUFFLER	0.2
4	313110	PIPE, EXHAUST	0.2
5	3131A6	PROTECTOR, EXHAUST PIPE	0.1
6	313121	PROTECTOR, MUFFLER	0.1
7		(1)	
	3131C1	ARRESTER, SPARK	0.1
9	3131C4	GASKET, MUFFLER	0.1

Ref. No.	Part No.	Description	Reqd. QTY CRF250X 4	5	6	7	8	Serial No.	Parts catalogue code
1	18291-KPS-900	GASKET, EX. MUFFLER	1	1	1	1	1		
2	18291-MM5-860	GASKET, EX. PIPE	1	1	1	1	1		
3	18310-KSC-010	MUFFLER COMP.	1	1	1	1	-		
	18310-KSC-A20		-	-	-	-	1		
4	18320-KSC-000	PIPE COMP., EX.	1	1	1	1	1		
5	18323-KRN-000	PROTECTOR, EX. PIPE	1	1	1	1	1		
6	18324-KRN-000	PROTECTOR, MUFFLER	1	1	1	1	1		
7	18355-KSC-000	ARRESTER ASSY.	1	1	1	-	-		
	18355-KSC-A10		-	-	-	1	-		
	18340-KSC-A20	ARRESTER COMP., MUFFLER	-	-	-	-	1		
8	18374-MG7-701	BAND, L. MUFFLER	1	1	1	1	1		
9	18392-MK4-000	PACKING, MUFFLER	1	1	1	1	1		
10	19508-KA3-710	NUT, SPRING, 6MM	4	4	4	4	4		
11	83512-KA4-700	RUBBER, SIDE COVER	2	2	2	2	2		
12	90101-KCE-000	BOLT, FLANGE, 6X10	4	4	4	4	4		
13	90101-KZ3-J50	BOLT, FLANGE, 8X24	1	1	1	1	1		
14	90123-KZ4-J40	BOLT, FLANGE, 8X18	1	1	1	1	1		
15	90124-KZ4-J40	BOLT, FLANGE, 8X35	1	1	1	1	1		
16	90170-MEB-670	BOLT, SPECIAL, 6MM	4	4	4	4	4		
17	90406-KV3-780	WASHER, 6MM	2	2	2	2	2		
18	94050-08000	NUT, FLANGE, 8MM	2	2	2	2	2		
19	94101-08000	WASHER, PLAIN, 8MM	1	1	1	1	1		
20	94102-08800	WASHER, PLAIN, 8MM	1	1	1	1	1		

PEDAL/KICK STARTER ARM

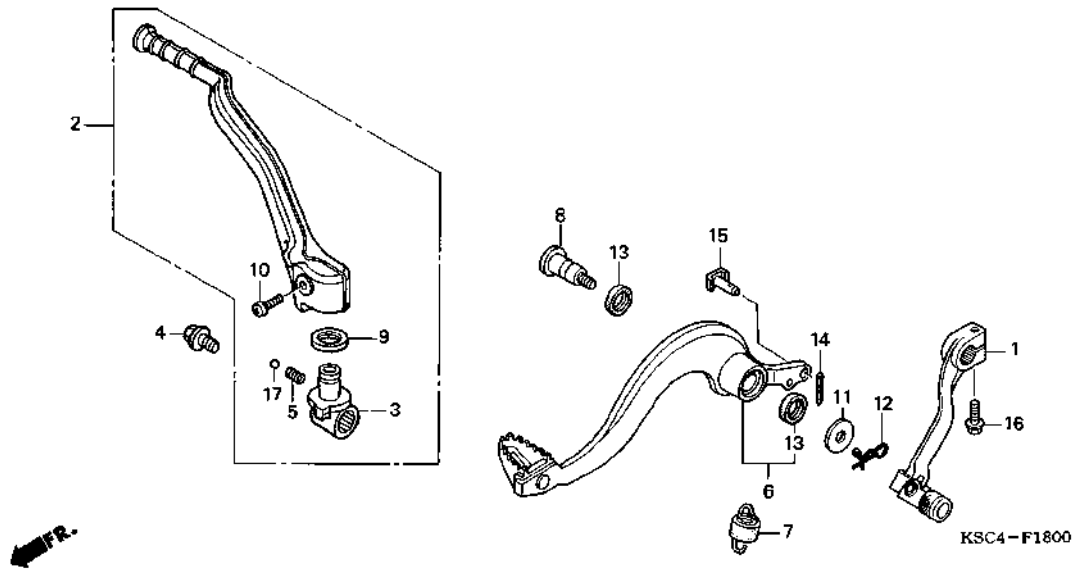

Ref. No.	L.O.N.	(Relative ref. Number) Description	F.R.T.
1	4101A1	PEDAL, GEAR CHANGE	0.1
2	112107	ARM, KICK STARTER	0.1
6	810160	PEDAL, REAR BRAKE	0.2

Ref. No.	Part No.	Description	Reqd. QTY CRF250X 4	5	6	7	8	Serial No.	Parts catalogue code
1	24700-KRN-000	PEDAL COMP., CHANGE	1	1	1	1	1		
2	28300-KRN-000	ARM ASSY., KICK STARTER	1	1	1	1	1		
3	28302-KRN-000	JOINT, KICK ARM	1	1	1	1	1		
4	28306-MEN-670	BOLT, KICK JOINT	1	1	1	1	1		
5	28333-KK0-000	SPRING, KICK STARTER	1	1	1	1	1		
6	46510-KSC-000	PEDAL, RR. BRAKE	1	1	1	1	1		
7	46511-KZ4-J00	SPRING ASSY., RR. BRAKE RETURN	1	1	1	1	1		
8	46513-KSC-000	SHAFT, BRAKE PIVOT	1	1	1	-	-		
	46513-KSC-A10		-	-	-	1	1		
9	46525-KK0-003	DUST SEAL, 17X20X2.5	1	1	1	1	1		
10	90103-KRN-000	BOLT, KICK ARM	1	1	1	1	1		
11	90404-MEN-670	WASHER, 26X9	1	1	1	-	-		
	90512-KRN-730	WASHER, 26X10.5	-	-	-	1	1		
12	90705-PFF-300	PIN, SNAP, 8MM	1	1	1	1	1		
13	91251-444-000	DUST SEAL, 15X20X2.5	2	2	2	2	2		
14	94201-20120	PIN, SPLIT, 2.0X12	1	1	1	1	1		
15	95015-54000	PIN D, JOINT	1	1	1	1	1		
16	96001-06022-00	BOLT, FLANGE, 6X22	1	1	1	1	1		
17	96211-08000	BALL, STEEL, #8 (1/4)	1	1	1	1	1		

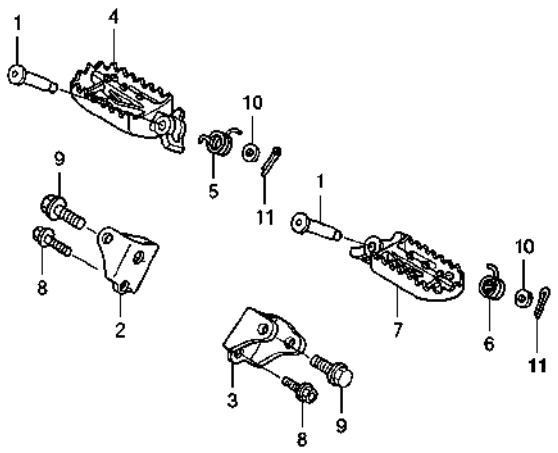

Ref. No.	L.O.N.	(Relative ref. Number) Description	F.R.T.
2	41O1C4	BRACKET, STEP :RIGHT ·····	0.2
	41O1N7	BRACKET, STEP :BOTH ·····	0.3
3	41O1C3	BRACKET, STEP :LEFT ·····	0.2
	41O1N7	BRACKET, STEP :BOTH ·····	0.3
4	41O1C6	BAR, MAIN STEP :RIGHT ·····	0.1
	41O1J1	BAR, MAIN STEP :BOTH ·····	0.2
7	41O1C5	BAR, MAIN STEP :LEFT ·····	0.1
	41O1J1	BAR, MAIN STEP :BOTH ·····	0.2

Ref. No.	Part No.	Description	Reqd. QTY CRF250X 4	5	6	7	8	Serial No.	Parts catalogue code
1	50603-KZ4-J40	PIN, STEP JOINT ·····	2	2	2	2	2		
2	50610-MEN-670	BRACKET, R. STEP ·····	1	-	-	-	-		
			-	1	-	-	-	-------- --------	DK
			-	1	-	-	-	-------- 5K111702	ED
	50610-MEN-671	·····	-	1	-	-	-	5K111703 --------	ED
			-	-	1	1	1		
3	50611-MEN-670	BRACKET, L. STEP ·····	1	-	-	-	-		
			-	1	-	-	-	-------- --------	DK
			-	1	-	-	-	-------- 5K111702	ED
	50611-MEN-671	·····	-	1	-	-	-	5K111703 --------	ED
			-	-	1	1	1		
4	50616-MEN-670	ARM, R. STEP ·····	1	1	1	1	1		
5	50617-KZ4-J40	SPRING, R. STEP RETURN ·····	1	1	1	1	1		
6	50618-KZ4-J40	SPRING, L. STEP RETURN ·····	1	1	1	1	1		
7	50642-MEN-670	ARM, L. STEP ·····	1	1	1	1	1		
8	90101-KZ3-J50	BOLT, FLANGE, 8X24 ·····	2	2	2	2	2		
9	90101-KZ4-J40	BOLT, STEP, 12MM ·····	2	2	2	2	2		
10	94102-08800	WASHER, PLAIN, 8MM ·····	2	2	2	2	2		
11	94201-25150	PIN, SPLIT, 2.5X15 ·····	2	2	2	2	2		

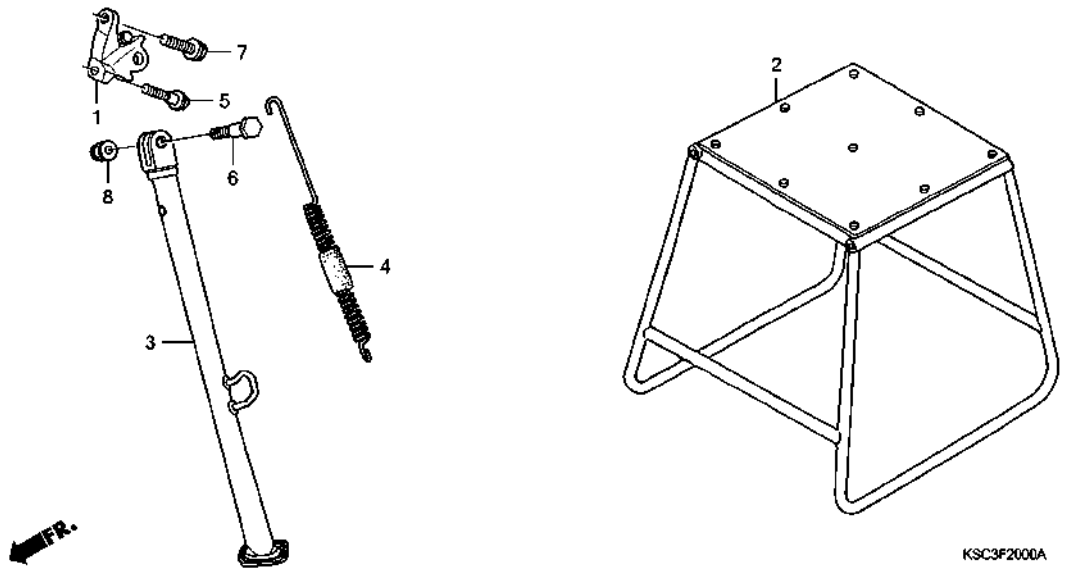

Ref. No.	L.O.N.	(Relative ref. Number) Description	F.R.T.
1	410181	BRACKET, SIDE STAND	0.2
3	410180	BAR, SIDE STAND	0.2
4	410182	SPRING, SIDE STAND	0.1

Ref. No.	Part No.	Description	Reqd. QTY CRF250X 4	5	6	7	8	Serial No.	Parts catalogue code
1	50125-KSC-000	BRACKET, SIDE STAND	1	1	1	1	1		
2	50500-KA3-820	STAND COMP., MAIN	(1)	(1)	(1)	(1)	(1)		
3	50530-KSC-000	BAR, SIDE STAND	1	1	1	1	1		
4	50540-KSC-000	SPRING ASSY., SIDE STAND	1	1	1	1	1		
5	90101-KZ3-J50	BOLT, FLANGE, 8X24	1	1	1	1	1		
6	90108-MJ0-000	BOLT, SIDE STAND PIVOT	1	1	1	1	1		
7	90122-MEN-670	BOLT, 10X24	1	1	1	1	1		
8	90304-GE8-003	NUT, U, 10MM	1	1	1	1	1		

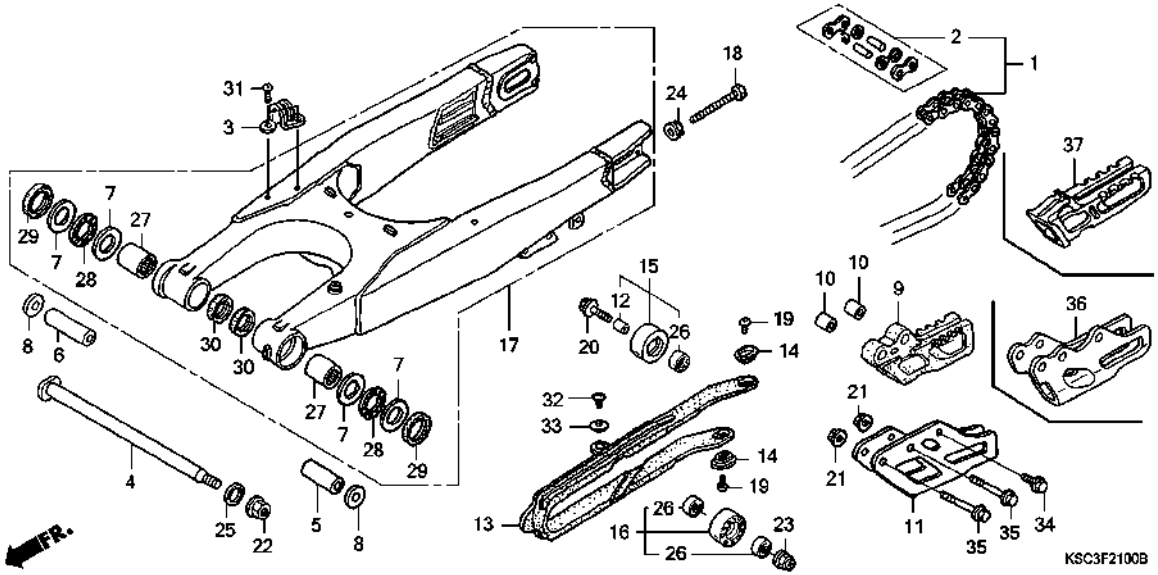

Ref. No.	L.O.N.	(Relative ref. Number) Description	F.R.T.
1	213165	CHAIN, DRIVE ----------	0.5
5	5121B1	COLLAR, SWINGARM PIVOT :LEFT -	0.8
	5121G8	COLLAR, SWINGARM PIVOT :BOTH -	0.8
6	5121B2	COLLAR, SWINGARM PIVOT :RIGHT	0.8
	5121G8	COLLAR, SWINGARM PIVOT :BOTH -	0.8
9		(11,36,37)	
	41O1E2	GUIDE, DRIVE CHAIN ----------	0.1
13	41O1E5	SLIDER, CHAIN ----------	0.3
15	41O1E4	ROLLER, CHAIN TENSIONER -----	0.1
16	41O1E3	ROLLER, CHAIN LOWER ----------	0.1
17	5121B0	SWINGARM ASSEMBLY ----------	1.1
27	5121C8	BEARING, SWINGARM PIVOT :LEFT	1.1
	5121C9	BEARING, SWINGARM PIVOT :RIGHT	1.1
	5121D0	BEARING, SWINGARM PIVOT :BOTH	1.2

Ref. No.	Part No.	Description	Reqd. QTY CRF250X 4	5	6	7	8	Serial No.	Parts catalogue code
1	06405-KSC-003	CHAIN SET, DRIVE (DID520MXV-120L) (STANDARD LINK 116L)	1	1	1	1	1		
2	40545-KSC-003	JOINT, DRIVE CHAIN ----------	1	1	1	1	1		
3	43468-KZ3-B00	GUIDE, RR. BRAKE HOSE -------	1	1	1	1	1		
4	52101-KZ4-J40	SHAFT, SWINGARM PIVOT -------	1	1	1	1	1		
5	52141-KZ3-J40	COLLAR, SWINGARM, 49MM ------	1	1	1	1	1		
6	52141-KZ4-J40	COLLAR, SWINGARM PIVOT (59MM)	1	1	1	1	1		
7	52143-KZ3-860	WASHER, SWINGARM SIDE -------	4	4	4	4	4		
8	52143-KZ4-J40	COLLAR, SWINGARM PIVOT SIDE -	2	2	2	2	2		
9	52146-MEN-000	GUIDE, CHAIN ----------	1	1	-	-	-		
	52146-KRN-711	----------	-	-	1	-	-		
10	52148-MEN-000	COLLAR, CHAIN GUIDE ---------	2	2	2	-	-		
11	52156-ML3-910	PLATE, CHAIN GUIDE ----------	1	1	-	-	-		
12	52160-MEN-000	COLLAR, CHAIN TENSIONER -----	1	1	1	1	1		
13	52170-MEB-750	SLIDER, CHAIN ----------	1	1	-	-	-		
	52170-KRN-710	----------	-	-	1	1	1		
14	52171-KR6-000	WASHER, CHAIN SLIDER --------	2	2	2	2	2		
15	52175-KSK-000	ROLLER, CHAIN (32) ----------	1	1	1	1	1		
16	52176-KZ3-J40	ROLLER COMP., CHAIN LOWER ---	1	1	-	-	-		
	52176-KRN-710	ROLLER COMP., CHAIN LOWER (34MM)	-	-	1	1	1		
17	52200-KSR-J00	SWINGARM SUB ASSY., RR. -----	1	1	-	-	-		
	52200-KSC-A00	----------	-	-	1	-	-		
	52200-KRN-J00	----------	-	-	-	1	-		
	52200-KRN-A10	----------	-	-	-	-	1		

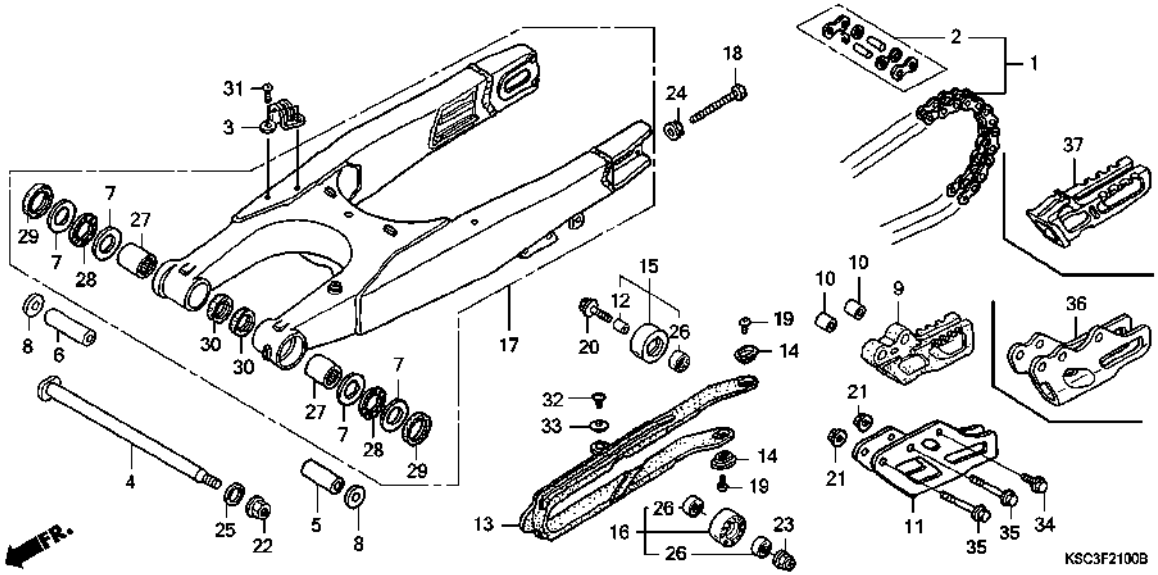

Ref. No.	Part No.	Description	Reqd. QTY CRF250X 4	5	6	7	8	Serial No.	Parts catalogue code
18	90105-MEN-000	BOLT, HEX., 8X47.5	2	2	2	2	2		
19	90115-KV3-700	SCREW, PAN, 5X8	2	2	2	2	2		
20	90124-MEB-770	BOLT, FLANGE, 8X32	1	1	1	1	1		
21	90301-473-003	NUT, U, 6MM	2	2	2	2	2		
22	90305-KZ3-B01	NUT, U, HEX. 14MM	1	1	1	1	1		
23	90309-ML3-791	NUT, U, 8MM	1	1	-	-	-		
	90301-473-003	NUT, U, 6MM	-	-	1	1	1		
24	90309-357-000	NUT, HEX., 8MM	2	2	2	2	2		
25	90501-GBL-730	WASHER, 14MM	1	1	1	1	1		
26	91011-GCT-003	BEARING, RADIAL BALL, 608UU	3	3	3	3	3		
27	91071-MJ0-003	BEARING, NEEDLE, 22X29X30(NTN)	2	2	2	2	2		
28	91072-KZ3-861	BEARING, NEEDLE THRUST	2	2	2	2	2		
29	91253-KZ3-861	DUST SEAL, 30X37X4	2	2	2	2	2		
30	91283-ML7-003	DUST SEAL, 22X29X4(ARAI)	2	2	2	2	2		
31	93500-05008-0A	SCREW, PAN, 5X8	2	2	2	2	2		
32	93500-05008-0G	SCREW, PAN, 5X8	1	1	1	1	1		
33	94103-05700	WASHER, PLAIN, 5MM	1	1	1	1	1		
34	96001-06012-00	BOLT, FLANGE, 6X12	1	1	1	1	1		
35	96001-06050-00	BOLT, FLANGE, 6X50	2	2	2	-	-		
	96001-06045-00	BOLT, FLANGE, 6X45	-	-	-	2	2		
36	52147-KRN-710	PLATE, CHAIN GUIDE	-	-	1	-	-		
	52147-MEN-J00		-	-	-	1	1		
37	52146-MEN-J00	GUIDE, CHAIN	-	-	-	1	1		

REAR CUSHION

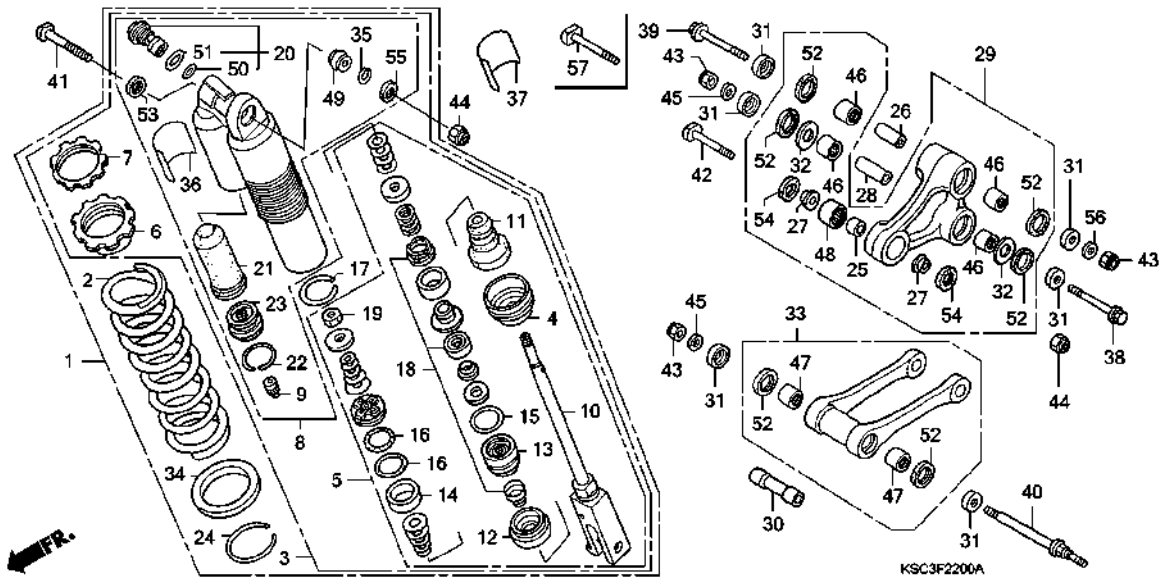

Ref. No.	L.O.N.	(Relative ref. Number) Description	F.R.T.
1	512115	CUSHION ASSY., REAR	0.5
2	5121B9	SPRING, REAR CUSHION	0.7
3	5121D2	DAMPER, REAR	0.8
5	5121H0	ROD ASSY., REAR DAMPER	1.1
8	5121D9	CASE, DAMPER	1.1
10	5121E1	ROD, REAR DAMPER	1.3
13		(4,11,12,14,15,16,18,19)	
	5121H1	CASE, ROD GUIDE	1.3
20	5121D8	ADJUSTER, COMPRESSION DAMPING FORCE	0.9
21		(23)	
	5121E0	BLADDER	0.9
29		(26,28)	
	512140	ARM, CUSHION	0.5
33		(30)	
	512145	ROD, CUSHION CONNECTING	0.3
46		(48)	
	512146	BEARING, CUSHION ARM	0.7
	5121D3	BEARING, CUSHION ARM :FOR 1 VEHICLE	1.1
47	5121D4	BEARING, CUSHION CONNECTING ROD	0.5
	5121D4A	.Replace 1 bearing add	0.1
49	5121D1	BEARING, REAR CUSHION	0.7

Ref. No.	Part No.	Description	Reqd. QTY CRF250X 4	5	6	7	8	Serial No.	Parts catalogue code
1	52400-KSC-003	CUSHION ASSY., RR.	1	1	-	-	-		
	52400-KSC-A01		-	-	1	-	-		
	52400-KSC-A11		-	-	-	1	1		
2	52401-KSC-003	SPRING, RR. CUSHION (SHOWA) (47.1N/MM,4.8KGF/MM)	1	1	1	1	1		
	52401-KZ3-J41	SPRING, RR. CUSHION (SHOWA) (49N/MM,5.0KGF/MM)	(1)	(1)	(1)	(1)	(1)		
	52402-KZ3-J21	SPRING, RR. CUSHION (SHOWA) (44.6N/MM,4.55KGF/MM)	(1)	(1)	(1)	(1)	(1)		
	52403-KZ3-J41	SPRING, RR. CUSHION (SHOWA) (51.0N/MM,5.2KGF/MM)	(1)	(1)	(1)	(1)	(1)		
3	52410-KSC-003	DAMPER COMP., RR.	1	1	-	-	-		
	52410-KSC-A01		-	-	1	1	1		
4	52419-KZ3-J21	STOPPER, SPRING SEAT	1	1	1	1	1		
5	52421-KSC-003	ROD COMP., PISTON	1	1	-	-	-		
	52421-KSC-A01		-	-	1	1	1		
6	52422-KZ3-J31	ADJUSTER, SPRING	1	1	1	1	1		
7	52423-KZ3-J21	NUT, ADJUSTER	1	1	1	1	1		
8	52425-KRN-671	CASE COMP., DAMPER	1	1	-	-	-		
	52425-MEY-671		-	-	1	1	1		
9	52425-381-771	CAP, AIR VALVE	1	1	1	1	1		
10	52426-KSC-003	ROD COMP.	1	1	-	-	-		
	52426-KSC-A01		-	-	1	1	1		
11	52427-KZ3-891	RUBBER, STOPPER	1	1	1	1	1		
12	52428-KZ3-J31	PLATE, END	1	1	-	-	-		
	52428-KRN-711		-	-	1	1	1		
13	52429-KSC-003	CASE COMP., ROD GUIDE	1	1	-	-	-		

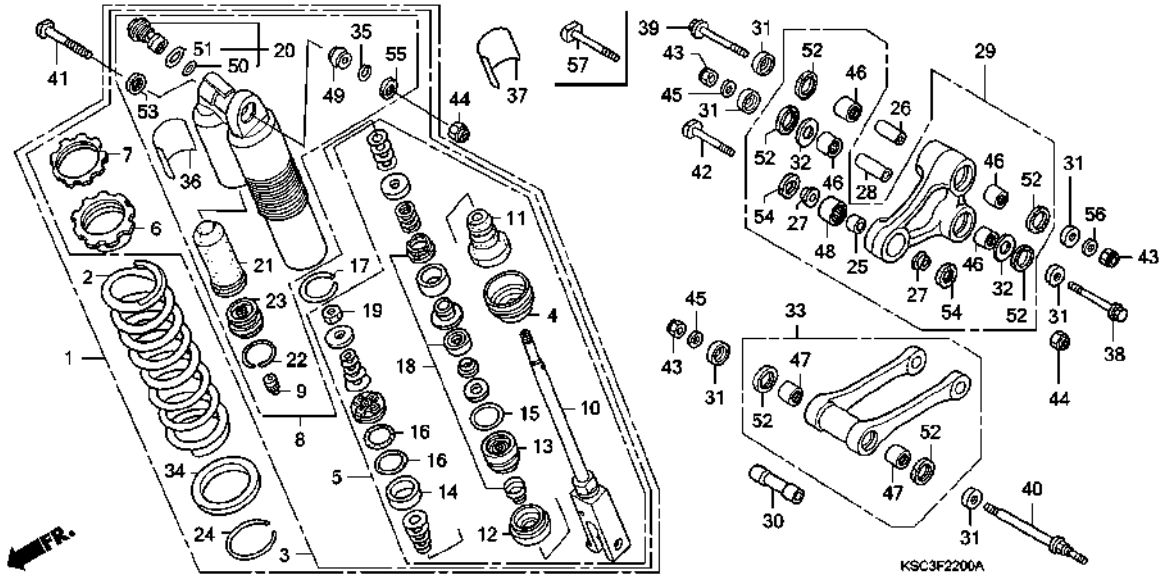

Ref. No.	Part No.	Description	Reqd. QTY CRF250X 4	5	6	7	8	Serial No.	Parts catalogue code
13)	52429-KZ3-J41	CASE COMP., ROD GUIDE ·····	-	-	1	1	1		
14	52431-KZ3-J31	RING, PISTON ·····	1	1	1	1	1		
15	52434-KZ3-J21	O-RING, 3.5X43.7 ·····	1	1	1	1	1		
16	52434-KZ3-J31	O-RING, 42.5X2.0 ·····	2	2	2	2	2		
17	52435-KZ3-J21	RING, STOPPER ·····	1	1	1	1	1		
18	52436-KSC-003	OIL SEAL SET ·····	1	1	-	-	-		
	52436-MEN-671	·····	-	-	1	1	1		
19	52438-KA4-741	NUT, HEX., 12MM ·····	1	1	1	1	1		
20	52440-MEN-671	ADJUSTER, COMPRESSION DAMPING FORCE	1	1	1	1	1		
21	52451-KZ3-891	BLADDER ·····	1	1	1	1	1		
22	52452-KS7-831	RING, STOPPER ·····	1	1	1	1	1		
23	52453-KS7-831	CAP COMP., CHAMBER ·····	1	1	-	-	-		
	52453-KRN-711	·····	-	-	1	1	1		
24	52455-KZ3-J21	RING, STOPPER ·····	1	1	1	1	1		
25	52463-KZ4-B00	COLLAR D, CUSHION ·····	1	1	-	-	-		
	52464-KRN-710	COLLAR D, CUSHION ARM ·····	-	-	1	1	1		
26	52463-KZ4-J40	COLLAR C, CUSHION ARM ·····	1	1	1	1	1		
27	52464-KZ4-B00	COLLAR D, CUSHION SIDE ·····	2	2	-	-	-		
	52466-KRN-710	COLLAR D, CUSHION ARM SIDE ··	-	-	2	2	2		
28	52464-KZ4-J20	COLLAR B, CUSHION ·····	1	1	1	1	1		
29	52465-KSC-000	ARM SUB ASSY., CUSHION ·····	1	1	-	-	-		
	52465-KSR-710	·····	-	-	1	1	1		
30	52473-KZ4-J20	COLLAR A, CONNECTING ROD ····	1	1	1	1	1		
31	52475-KZ4-J20	COLLAR, LINK SIDE ·····	6	6	6	6	6		

Ref. No.	Part No.	Description	Reqd. QTY CRF250X 4	5	6	7	8	Serial No.	Parts catalogue code
32	52476-KZ4-J20	WASHER, THRUST	2	2	2	2	2		
33	52479-KZ4-J40	ROD SUB ASSY., CUSHION CONNECTING	1	1	-	-	-		
	52479-KSR-710		-	-	1	-	-		
	52479-KSC-A10		-	-	-	1	1		
34	52486-KZ3-J21	SEAT, SPRING	1	1	1	1	1		
35	52487-KA4-831	RING, STOPPER	1	1	1	1	1		
36	87516-KZ1-600	LABEL, RR. DAMPER WARNING	1	1	1	1	1		
37	87516-KZ1-881	LABEL, RR. DAMPER WARNING (FRENCH)	1	1	-	1	1	-------- --------	ED,ED/A,ED/B
			-	-	1	-	-		
38	90130-KZ4-J20	BOLT, LINK, 12X96	1	1	1	-	-		
	90131-MEN-840	BOLT, LINK, 12X92	-	-	-	1	1		
39	90130-KZ4-J40	BOLT, LINK, 12X81.5	1	1	1	-	-		
40	90131-KZ4-J40	BOLT, LINK, 12X120	1	1	-	-	-		
	90131-MEY-000		-	-	1	1	1		
41	90152-MEB-750	BOLT, CUSHION UPPER, 10X53	1	1	1	1	1		
42	90153-KZ4-710	BOLT, CUSHION LOWER, 10X43.5	1	1	1	1	1		
43	90306-KBP-901	NUT, U, 12MM	3	3	3	3	3		
44	90306-KZ4-711	NUT, U, 10MM	2	2	2	2	2		
45	90501-KZ4-J40	WASHER, PLAIN, 12MM	2	2	-	-	-		
	90501-KRN-710		-	-	2	2	2		
46	91051-KSC-003	BEARING, NEEDLE, 20X26X15	4	4	4	4	4		
47	91053-KZ4-J21	BEARING, NEEDLE, 20X26X14	2	2	2	-	-		
	91051-KSC-003	BEARING, NEEDLE, 20X26X15	-	-	-	2	2		
48	91074-KZ4-B01	BEARING, NEEDLE, 19X26X15	1	1	-	-	-		
	91074-KRN-711	BEARING, NEEDLE, 19X26X13	-	-	1	1	1		
49	91074-MAC-741	BEARING, SPHERICAL, 10	1	1	1	1	1		
50	91256-KZ3-731	O-RING, 21.5X1.5	1	1	1	1	1		
51	91257-KZ3-891	O-RING, 26.2X1.9	1	1	1	1	1		
52	91262-KZ3-731	DUST SEAL, 25X32X4	6	6	6	6	6		
53	91351-KZ3-731	DUST SEAL, RR. CUSHION PIVOT	1	1	1	1	1		
54	91351-KZ4-B01	DUST SEAL, 17X26X3	2	2	-	-	-		
	91351-KRN-711	DUST SEAL, 17.5X26X3	-	-	2	2	2		
55	91351-MAC-671	DUST SEAL, 16X26X3	1	1	1	1	1		
56	90501-KZ4-J40	WASHER, PLAIN, 12MM	1	1	1	1	1		
57	90130-MEN-840	BOLT, LINK, 12X82	-	-	-	1	1		

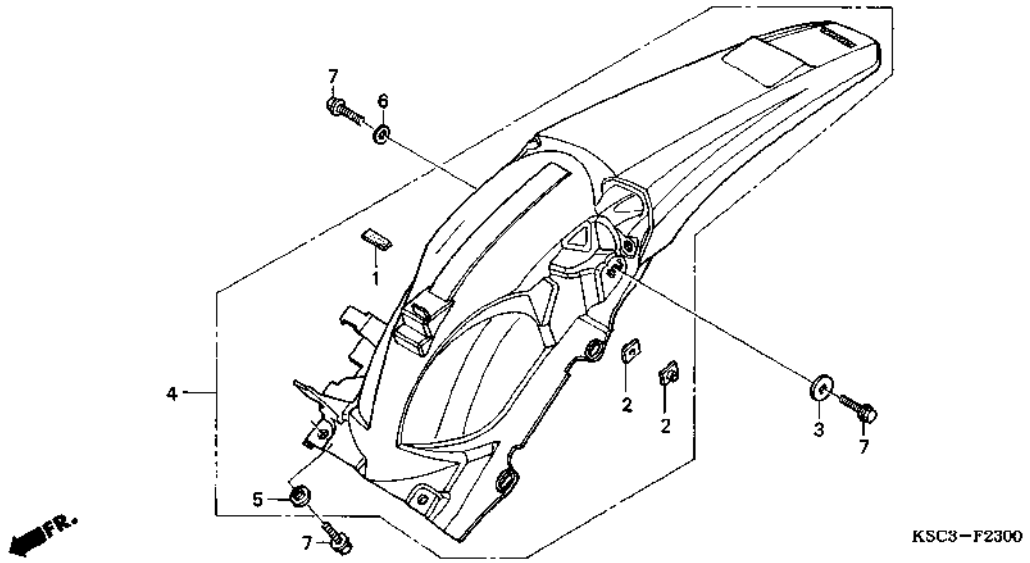

Ref. No.	L.O.N.	(Relative ref. Number) Description	F.R.T.
4	413102	FENDER, REAR	0.5

Ref. No.	Part No.	Description	Reqd. QTY CRF250X 4	5	6	7	8	Serial No.	Parts catalogue code
1	50283-KSC-300	RUBBER, BATTERY	1	1	1	1	1		
2	61304-958-003	NUT, SPECIAL, 6X7	2	2	2	2	2		
3	77302-124-000	WASHER, SEAT MOUNTING	1	1	1	1	1		
4	80101-KSC-000ZB	FENDER SET, RR. *TYPE1*(WL)	1	1	1	1	1		
5	90503-KRN-000	COLLAR, RR. FENDER	2	2	2	2	2		
6	94101-06800	WASHER, PLAIN, 6MM	1	1	1	-	-		
7	96001-06016-00	BOLT, FLANGE, 6X16	4	4	4	4	4		

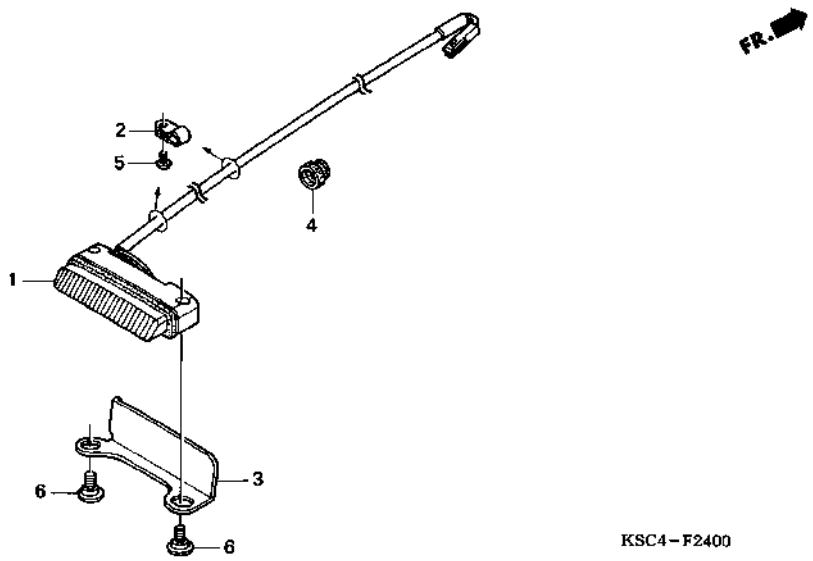

Ref. No.	L.O.N.	(Relative ref. Number) Description	F.R.T.
1		(3)	
	6161D5	TAILLIGHT UNIT	0.2

Ref. No.	Part No.	Description	Reqd. QTY CRF250X 4	5	6	7	8	Serial No.	Parts catalogue code
1	33701-KSC-671	TAILLIGHT UNIT	1	1	-	-	-		
	33701-KSC-A00		-	-	1	1	1		
2	37215-KAF-008	CLAMP	2	2	2	2	2		
3	80130-KSC-000	STAY, TAILLIGHT	1	1	1	1	1		
4	83501-MG7-000	GROMMET, SIDE COVER	1	1	-	-	-		
5	90102-SP1-003	SCREW, TAPPING, 4X8(PO)	2	2	2	2	2		
6	90380-KSC-000	SCREW, SPECIAL, 5X9.5	2	2	2	2	2		

BATTERY

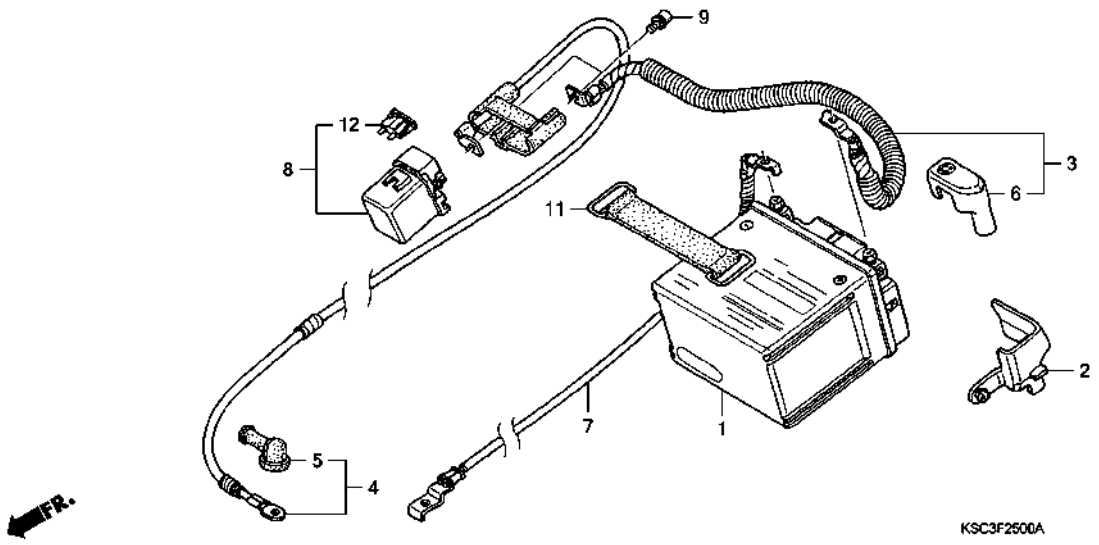

Ref. No.	L.O.N.	(Relative ref. Number) Description	F.R.T.
1	610100	BATTERY	0.2
3	610105	CABLE, POSITIVE BATTERY	0.2
4	612115	CABLE, STARTER MOTOR	0.3
7	610110	CABLE, NEGATIVE BATTERY	0.3
8	615113	SWITCH, STARTER MAGNETIC	0.4

Ref. No.	Part No.	Description	Reqd. QTY CRF250X 4	5	6	7	8	Serial No.	Parts catalogue code
1	31500-KY4-905	BATTERY (YTX5L-BS)(YUASA)	1	1	1	1	1		
2	31505-KSC-000	COVER, BATTERY TERMINAL	1	1	1	1	1		
3	32401-KSC-670	CABLE, STARTER MAGNETIC BATTERY	1	1	1	-	-		
	32401-KSC-A10		-	-	-	1	1		
4	32410-KSC-670	CABLE, STARTER MOTOR	1	1	1	-	-		
	32410-KSC-A10		-	-	-	1	1		
5	32411-253-000	COVER, STARTER MOTOR TERMINAL	1	1	1	1	1		
6	32414-MCF-000	COVER, BATTERY TERMINAL	1	1	1	1	1		
7	32601-KSC-670	CABLE, BATTERY EARTH	1	1	1	-	-		
	32601-KSC-A10		-	-	-	1	1		
8	35850-KK6-740	SWITCH ASSY., STARTER MAGNETIC	1	1	1	1	1		
9	90111-MR5-000	BOLT, SOCKET, 5X9	2	2	2	2	2		
11	95012-13001	BAND B2, BATTERY	1	1	1	1	1		
12	98200-31500	FUSE, BLADE (15A)	1	1	1	1	1		

WIRE HARNESS

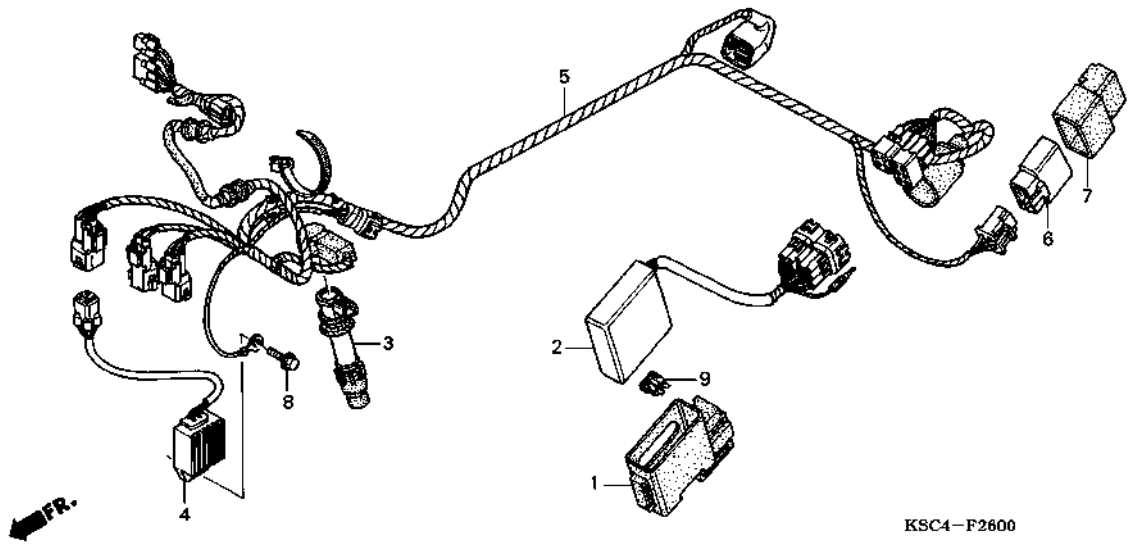

Ref. No.	L.O.N.	(Relative ref. Number) Description	F.R.T.
2	6141A1	IGNITION CONTROL MODULE ------	0.5
3	6141B8	COIL, DIRECT IGNITION --------	0.5
4	6131B2	RECTIFIER, REGULATE ----------	0.5
5	611100	HARNESS, WIRE ----------------	0.7
6	611155	RELAY, MAIN ------------------	0.3

Ref. No.	Part No.	Description	Reqd. QTY CRF250X 4	5	6	7	8	Serial No.	Parts catalogue code
1	30401-KSC-000	CUSHION, C.D.I. UNIT --------	1	1	1	1	1		
2	30410-KSC-671	C.D.I. UNIT -----------------	1	1	-	-	-		
	30410-KSC-A01	----------	-	-	1	-	-		
	30410-KSC-D11	----------	-	-	-	1	-		
	30410-KSC-D21	----------	-	-	-	-	1		
3	30700-KRN-670	CAP ASSY., NOISE SUPPRESSOR -	1	1	1	1	1		
4	31600-KSC-671	RECTIFIER COMP., REGULATOR --	1	1	1	1	1		
5	32100-KSC-671	HARNESS, WIRE ----------------	1	1	-	-	-		
	32100-KSC-A00	----------	-	-	1	-	-		
	32100-KSC-A10	----------	-	-	-	1	-		
	32100-KSC-A20	----------	-	-	-	-	1		
6	38501-GAM-007	RELAY COMP., STARTER (MATSUSHITA)	1	1	-	-	-		
7	38506-MY2-691	SUSPENSION, STARTER RELAY (MATSUSHITA)	1	1	-	-	-		
8	96001-06016-00	BOLT, FLANGE, 6X16 ----------	1	1	1	1	1		
9	98200-31500	FUSE, BLADE (15A) ----------	1	1	1	1	1		

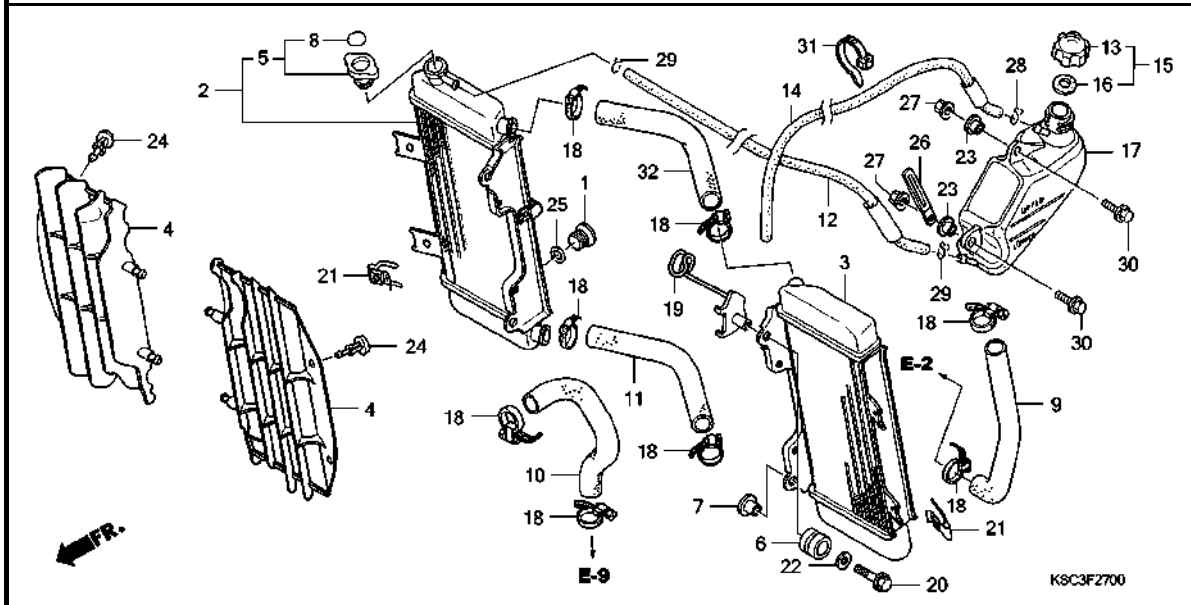

Ref. No.	L.O.N.	(Relative ref. Number) Description	F.R.T.
2	115102	RADIATOR :RIGHT	0.6
	1151A2	RADIATOR :BOTH	0.8
3	115101	RADIATOR :LEFT	0.6
	1151A2	RADIATOR :BOTH	0.8
4	1151B2	GRILLE, RADIATOR :LEFT	0.1
	1151B3	GRILLE, RADIATOR :RIGHT	0.1
	1151G3	GRILLE, RADIATOR :BOTH	0.1
5	1151B8	CAP, RADIATOR	0.1
9	114130	HOSE A, WATER	0.4
10	114131	HOSE B, WATER	0.4
11	1151H6	HOSE, CROSS WATER	0.4
17	115110	TANK, RADIATOR RESERVE	0.3
32	1151J7	HOSE, CROSS WATER :UPPER	0.5

Ref. No.	Part No.	Description	Reqd. QTY CRF250X 4	5	6	7	8	Serial No.		Parts catalogue code
1	12206-881-310	BOLT, SEALING, 16MM	1	1	1	1	1			
2	19010-KSC-640	RADIATOR, R.	1	-	-	-	-			
	19010-KSC-003		-	1	-	-	-	--------	--------	DK
	19010-KSC-641		-	1	-	-	-	--------	--------	ED
			-	-	1	-	-			
	19010-KSC-A11		-	-	-	1	1			
3	19015-KRN-003	RADIATOR, L.	1	-	-	-	-			
			-	1	-	-	-	--------	--------	DK
			-	1	-	-	-	--------	5K110001	ED
	19015-KRN-731		-	1	-	-	-	5K110002	--------	ED
			-	-	1	-	-			
	19015-KSC-A11		-	-	-	1	1			
4	19033-KRN-000	GRILLE, RADIATOR	2	-	-	-	-			
			-	2	-	-	-	--------	--------	DK
			-	2	-	-	-	--------	5K110001	ED
	19033-KRN-010		-	2	-	-	-	5K110002	--------	ED
			-	-	2	2	2			
5	19037-KRN-640	CAP COMP., RADIATOR	1	-	-	-	-			
	19037-KRN-003		-	1	-	-	-	--------	--------	DK
	19037-KRN-641		-	1	-	-	-	--------	--------	ED
			-	-	1	1	1			
6	19051-KRN-000	RUBBER, RADIATOR MOUNTING	4	4	4	4	4			
7	19052-MAC-680	COLLAR, RADIATOR MOUNTING	3	3	3	3	3			
8	19055-KRN-640	SEAL, RADIATOR CAP (ENGLISH/FRENCH/JAPANESE)	1	-	-	-	-			
	19055-KRN-003	SEAL, RADIATOR CAP (ENGLISH)	-	1	-	-	-	--------	--------	DK

Ref. No.	Part No.	Description	Reqd. QTY CRF250X 4	5	6	7	8	Serial No.	Parts catalogue code
(8)	19055-KRN-641	SEAL, RADIATOR CAP (ENGLISH/FRENCH/JAPANESE)	-	1	-	-	-	-------- --------	ED
			-	-	1	1	1		
9	19061-KRN-000	HOSE A, WATER	1	1	1	1	1		
10	19062-KRN-000	HOSE B, WATER	1	1	1	1	1		
11	19064-KRN-000	HOSE D, WATER	1	1	1	1	1		
12	19104-KSC-000	TUBE, RADIATOR BREATHER	1	1	1	1	1		
13	19104-ME9-000	CAP, RESERVE TANK	1	1	1	1	1		
14	19105-KSC-000	TUBE, RADIATOR DRAIN	1	1	1	-	-		
	19105-KSC-A10	TUBE, RESERVE TANK DRAIN	-	-	-	1	1		
15	19105-MG8-000	CAP ASSY., RESERVE TANK	1	1	1	1	1		
16	19107-MG8-000	PACKING, RESERVE TANK	1	1	1	1	1		
17	19110-KSC-000	TANK, RADIATOR RESERVE	1	1	1	1	1		
18	19506-KS6-700	CLAMP B, WATER HOSE	8	8	8	8	8		
19	50129-KSC-000	GUIDE, MAIN HARNESS	1	1	-	-	-		
			-	-	1	-	-	-------- --------	ED,ED/A
	50129-MEY-A10		-	-	1	-	-	-------- --------	ED/B
			-	-	-	1	1		
20	90001-GB4-000	BOLT, FLANGE, 6X23.5	4	4	4	4	4		
21	90303-KRN-000	NUT, CLIP, 6MM	2	2	2	2	2		
22	90403-KA3-830	WASHER, RADIATOR MOUNTING	4	4	4	4	4		
23	90522-170-700	COLLAR, GEARSHIFT LEVER SETTING	2	2	2	2	2		
24	90601-KSC-003	CLIP, GRILLE	2	2	2	-	-		
25	91307-611-000	O-RING, 13.5X1.4	1	1	1	1	1		
26	91406-166-000	CLIP, WIRE	1	1	1	1	1		
27	94050-06000	NUT, FLANGE, 6MM	2	2	2	2	2		
28	95002-02080	CLIP, TUBE (B8)	1	1	1	1	1		
29	95002-02100	CLIP, TUBE (B10)	2	2	2	2	2		
30	96001-06016-00	BOLT, FLANGE, 6X16	2	2	2	2	2		
31	90652-KT1-771	BAND, WIRE (BLACK)	1	1	1	1	1		
32	19064-KSC-000	HOSE D, WATER UPPER	1	1	1	1	1		

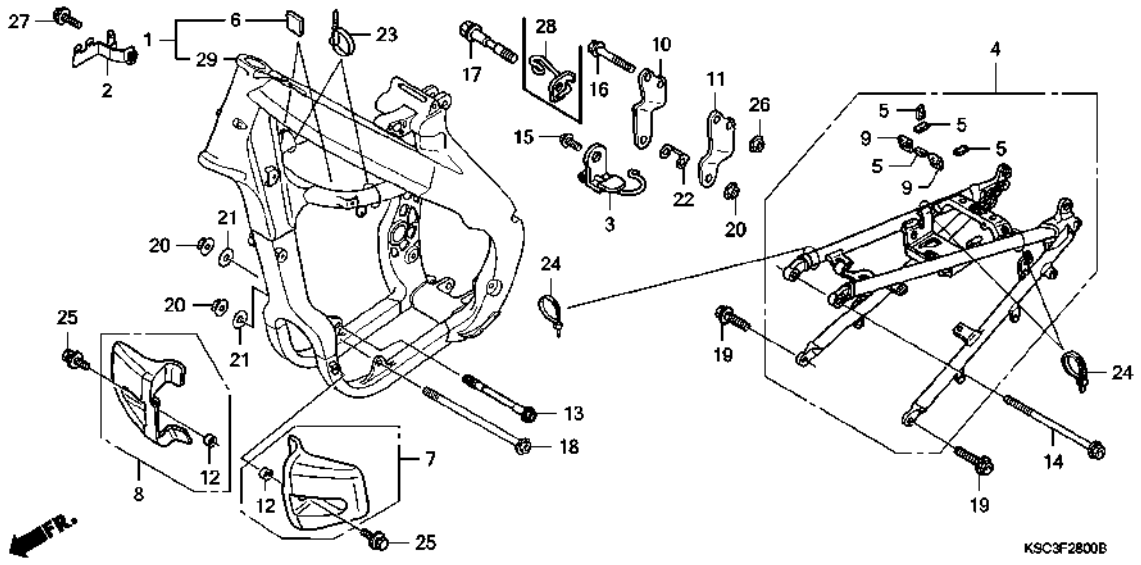

Ref. No.	L.O.N.	(Relative ref. Number) Description	F.R.T.
1	410100	BODY, FRAME	4.8
		.INCLUDES: Engine removal and installation	
4	4101A5	FRAME :REAR	0.8
7	4101F5	GUARD, ENGINE :LEFT	0.1
	4101F9	GUARD, ENGINE :BOTH	0.1
8	4101F6	GUARD, ENGINE :RIGHT	0.1
	4101F9	GUARD, ENGINE :BOTH	0.1

Ref. No.	Part No.	Description	Reqd. QTY CRF250X 4	5	6	7	8	Serial No.	Parts catalogue code
1	50010-KSC-000	BODY SET, FRAME	1	-	-	-	-		
	50010-KSC-730	.....	-	1	-	-	-		
	50010-KSC-731	.....	-	-	1	-	-		
	50010-KSC-A10	.....	-	-	-	1	-		
2	50126-KRN-000	STAY, COUPLER	1	1	1	1	1		
3	50197-KRN-000	CLIP, FUEL TUBE	1	1	1	1	1		
4	50200-KSC-010	BODY COMP., RR. FRAME	1	-	-	-	-		
	50200-KSC-730	.....	-	1	1	1	1		
5	50283-KSC-300	RUBBER, BATTERY	4	4	4	4	4		
6	50283-MR7-300	RUBBER, SEAT RAIL	2	2	2	-	-		
	50283-MEN-A00	RUBBER, TANK GUARD	-	-	-	2	-		
7	50360-KRN-000	GUARD, L. ENGINE	1	1	1	1	-		
	50360-KRN-A10	.....	-	-	-	-	1		
8	50370-KSC-000	GUARD, R. ENGINE	1	1	1	1	1		
9	50283-MR7-300	RUBBER, SEAT RAIL	2	2	2	2	2		
10	50407-KSC-000	BRACKET, R. HEAD HANGER	1	1	-	-	-		
	50407-KRN-730	.....	-	-	1	1	1		
11	50408-KSC-000	BRACKET, L. HEAD HANGER	1	1	-	-	-		
	50408-KRN-730	.....	-	-	1	1	1		
12	52156-353-300	COLLAR, 6X4	2	2	2	2	2		
13	90101-KSC-000	BOLT, FLANGE, 10X117	1	1	1	1	1		
14	90105-KRN-000	BOLT, FLANGE, 8X125	1	1	1	1	1		
15	90106-KRN-000	BOLT, FLANGE, 5X12	1	1	1	1	1		
16	90107-KRN-000	BOLT, FLANGE, 8X55	2	2	2	2	2		
17	90109-KSC-000	BOLT, FLANGE, 10X58	1	1	1	1	1		
18	90116-KW3-000	BOLT, FLANGE, 10X138	1	1	1	1	1		

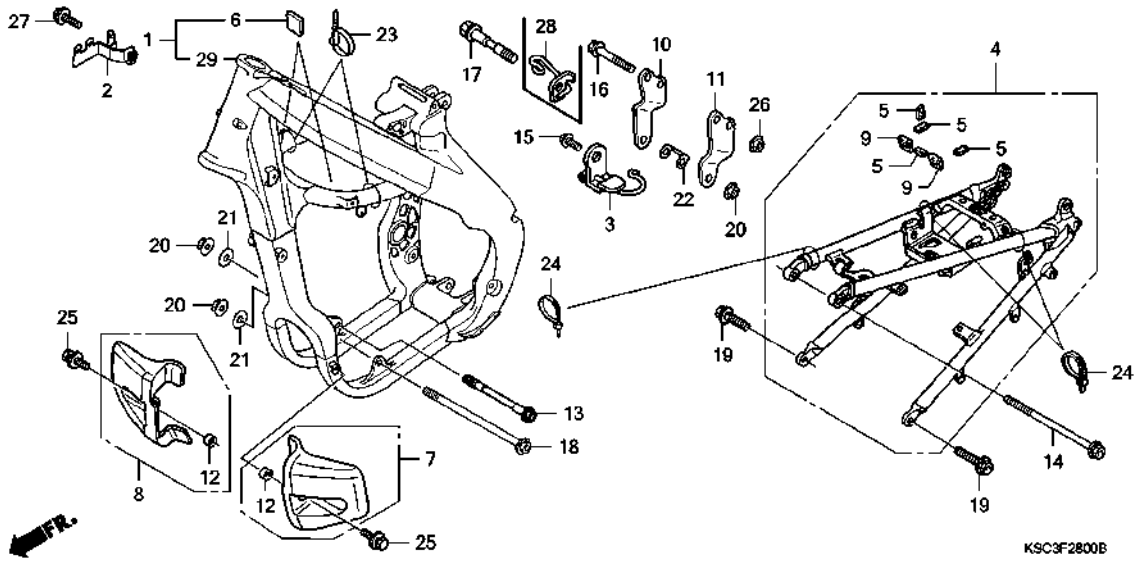

Ref. No.	Part No.	Description	Reqd. QTY CRF250X 4	5	6	7	8	Serial No.	Parts catalogue code
19	90122-KRN-000	BOLT, FLANGE, 10X26	2	2	2	2	2		
20	90302-KZ3-J40	NUT, FLANGE, 10MM	3	3	3	3	3		
21	90410-HC4-000	WASHER, 10MM	2	2	2	2	2		
22	90511-KRN-000	WASHER, HEAD HANGER PLATE	1	1	1	1	1		
23	90651-KV6-003	BAND, WIRE	2	2	2	2	2		
24	90652-KT1-771	BAND, WIRE (BLACK)	3	3	3	3	3		
25	93404-06014-00	BOLT-WASHER, 6X14	2	2	2	2	2		
26	94050-08000	NUT, FLANGE, 8MM	2	2	2	2	2		
27	96001-06016-00	BOLT, FLANGE, 6X16	1	1	1	-	-		
	90004-GHB-630	BOLT, FLANGE, 6X16(NSHF)	-	-	-	1	1		
28	50170-KSC-A20	GUIDE, CLUTCH CABLE	-	-	-	-	1		
29	50100-KSC-A10	BODY COMP., FRAME	-	-	-	-	1		

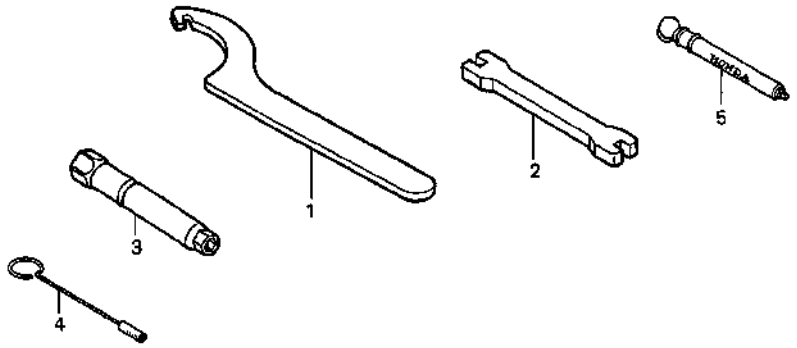

Ref. No.	L.O.N.	(Relative ref. Number) Description	F.R.T.
NO INFORMATION ----------			

Ref. No.	Part No.	Description	Reqd. QTY CRF250X 4	5	6	7	8	Serial No.	Parts catalogue code
1	89201-KS6-810	SPANNER A, PIN ----------	(2)	(2)	(2)	(2)	(2)		
2	89212-KZ4-J40	WRENCH, NIPPLE ----------	1	1	1	1	1		
3	89216-MEB-670	WRENCH, PLUG (16MM) ----------	1	-	-	-	-	-------- 4K000687	ED
			1	-	-	-	-	-------- 4K050514	U
	89216-MY9-000	----------	1	-	-	-	-	4K000688 --------	ED
			1	-	-	-	-	4K050515 --------	U
			-	1	1	1	1		
4	89217-KRN-000	TOOL, CARBURETOR MAINTENANCE	1	1	1	1	1		
5	89301-KA4-811	GAUGE, AIR PRESSURE ----------	(1)	(1)	(1)	(1)	(1)		

CAUTION LABEL

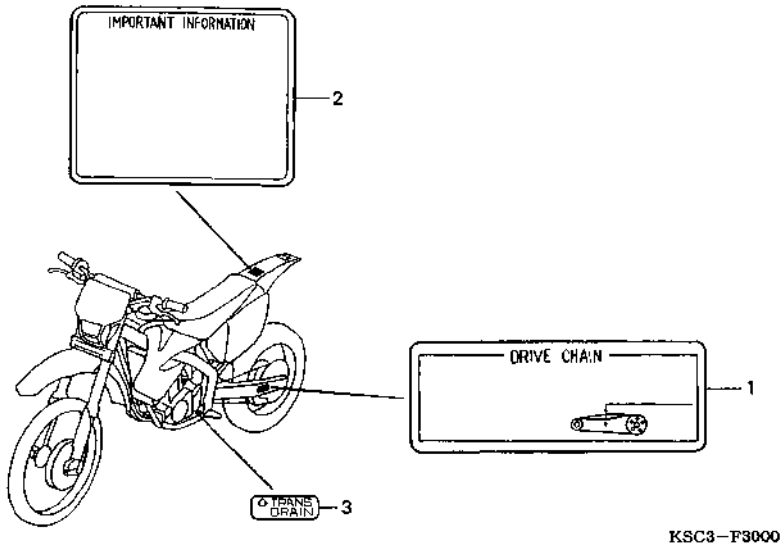

Ref. No.	L.O.N.	(Relative ref. Number) Description	F.R.T.
		NO INFORMATION ----------	

Ref. No.	Part No.	Description	Reqd. QTY CRF250X 4	5	6	7	8	Serial No.	Parts catalogue code
1	87507-KZ3-B10	LABEL, DRIVE CHAIN ----------	1	1	1	1	1		
	87507-KZ3-B90	LABEL, DRIVE CHAIN (FRENCH) -	1	1	-	1	1	-------- --------	ED,ED/A,ED/B
			-	-	1	-	-		
2	87560-GBF-770	MARK, CAUTION ----------	1	-	1	1	1		
			-	1	-	-	-	-------- --------	ED
	87560-KSC-000	----------	-	1	-	-	-	-------- --------	DK
	87560-ML3-970	MARK, CAUTION (FRENCH) ------	1	1	-	1	1	-------- --------	ED,ED/A,ED/B
			-	-	1	-	-		
3	87564-KRN-000	LABEL, TRANSMISSION DRAIN ---	1	1	1	1	-		

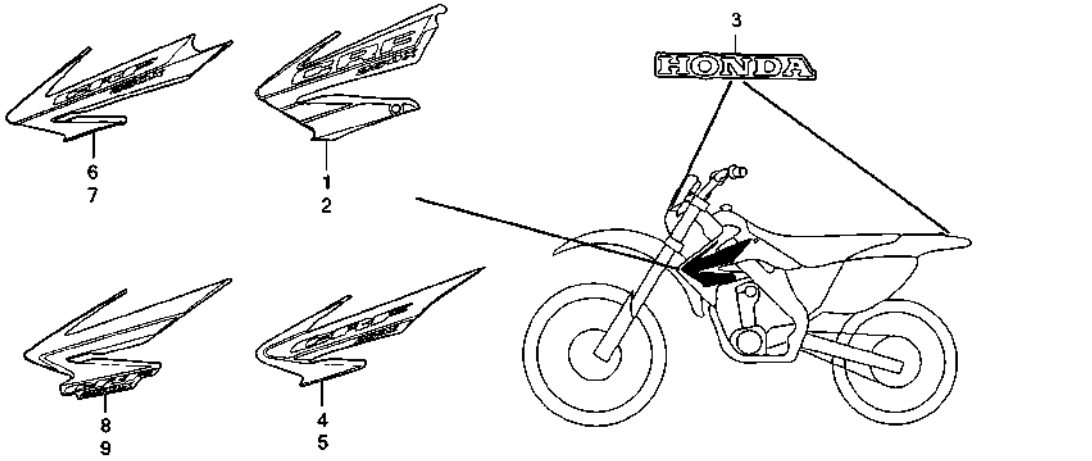

Ref. No.	L.O.N.	(Relative ref. Number) Description	F.R.T.
NO INFORMATION ----------			

Ref. No.	Part No.	Description	Reqd. QTY CRF250X 4	5	6	7	8	Serial No.	Parts catalogue code
1	87126-KSC-000ZA	MARK, R. RADIATOR SHROUD *TYPE1*	1	-	-	-	-		
2	87127-KSC-000ZA	MARK, L. RADIATOR SHROUD *TYPE1*	1	-	-	-	-		
3	87130-GEL-A00ZA	MARK *TYPE1*(HONDA) ----------	2	2	2	2	-		
4	87126-KSC-730ZA	MARK, R. RADIATOR SHROUD *TYPE1*	-	1	-	-	-		
5	87127-KSC-730ZA	MARK, L. RADIATOR SHROUD *TYPE1*	-	1	-	-	-		
6	87126-KSC-A00ZA	MARK, R. RADIATOR SHROUD *TYPE1*	-	-	1	-	-		
7	87127-KSC-A00ZA	MARK, L. RADIATOR SHROUD *TYPE1*	-	-	1	-	-		
8	87126-KSC-A10ZA	MARK, R. RADIATOR SHROUD *TYPE1*	-	-	-	1	-		
9	87127-KSC-A10ZA	MARK, L. RADIATOR SHROUD *TYPE1*	-	-	-	1	-		

MARK (CRF250X8)

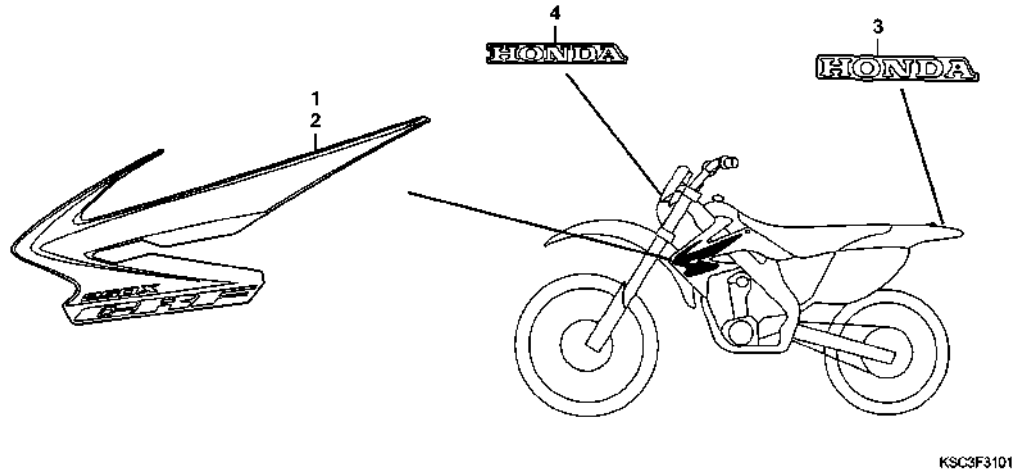

Ref. No.	L.O.N.	(Relative ref. Number) Description	F.R.T.
NO INFORMATION ----------			

Ref. No.	Part No.	Description	Reqd. QTY CRF250X 4	5	6	7	8	Serial No.	Parts catalogue code
1	87126-KSC-A20ZA	MARK, R. RADIATOR SHROUD *TYPE1*	-	-	-	-	1		
2	87127-KSC-A20ZA	MARK, L. RADIATOR SHROUD *TYPE1*	-	-	-	-	1		
3	87130-GEL-A00ZA	MARK *TYPE1*(HONDA) ----------	-	-	-	-	1		
4	87130-KCZ-640ZA	MARK *TYPE1*(HONDA) ----------	-	-	-	-	1		

FOP-1 COOLING FAN

J 2

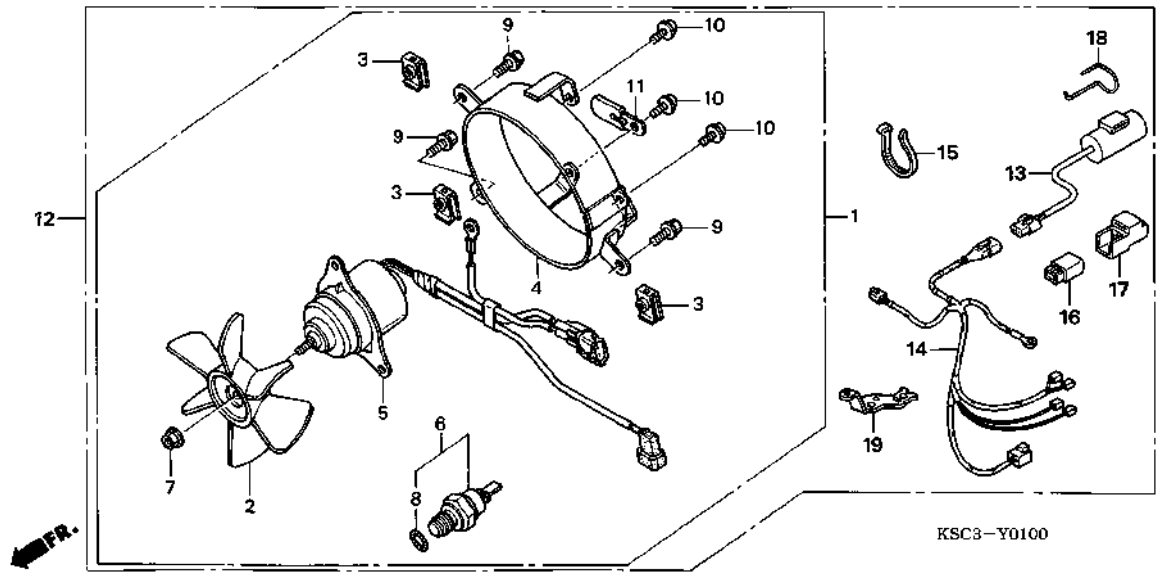

Ref. No.	L.O.N.	(Relative ref. Number) Description	F.R.T.
1	1151H7	COOLING FAN ASSEMBLY	0.5
2	1151A6	FAN, COOLING	0.2
4	115125	SHROUD, RADIATOR	0.2
5	1151A7	MOTOR, FAN	0.3
6	1151F4	SWITCH, FAN MOTOR	0.3
12	1151J8	COOLING FAN SET	0.9
13	6131C1	CONDENSER	0.2
14	6111L6	SUB HARNESS, OPTION COOLING FAN	0.6
16	611155	RELAY, MAIN	0.3

Ref. No.	Part No.	Description	Reqd. QTY CRF250X 4	5	6	7	8	Serial No.	Parts catalogue code
1	19000-KSC-000	FAN SET, COOLING	1	1	-	-	-		
2	19009-KSC-671	FAN COMP., COOLING	1	-	1	1	-		
			-	1	-	-	-	--------- ---------	ED
	19009-KSC-000		-	1	-	-	-	--------- ---------	DK
3	19014-KEA-003	NUT, SETTING	3	3	3	3	-		
4	19020-KSC-300	SHROUD COMP., FAN	1	1	1	1	-		
5	19030-KSC-671	MOTOR, COOLING FAN	1	-	1	1	-		
			-	1	-	-	-	--------- ---------	ED
	19030-KSC-670		-	1	-	-	-	--------- ---------	DK
6	37760-MT2-003	SWITCH ASSY., THERMO	1	1	1	1	-		
7	90308-KM3-003	NUT, TOOTHED, 3MM	1	1	1	1	-		
8	91307-611-000	O-RING, 13.5X1.4	1	1	1	1	-		
9	93401-06012-08	BOLT-WASHER, 6X12	3	3	3	3	-		
10	93891-04008-07	SCREW-WASHER, 4X8	3	3	3	3	-		
11	94591-24000	CLIP, WIRE, 2X40	1	1	1	1	-		
12	19000-KSC-D00	FAN SET, COOLING	-	-	1	1	-		
13	31700-KSC-D00	RECTIFIER ASSY., SILICON	-	-	1	1	-		
14	32110-KSC-D00	SUB HARNESS, OPTION FAN	-	-	1	1	-		
15	35701-MG9-950	BAND	-	-	4	4	-		
16	38501-GAM-007	RELAY COMP., STARTER (MATSUSHITA)	-	-	1	1	-		
17	38506-MY2-691	SUSPENSION, STARTER RELAY (MATSUSHITA)	-	-	1	1	-		
18	50142-KSC-D00	GUARD, CONDENSER	-	-	1	1	-		
19	50143-KSC-D00	STAY, CONDENSER	-	-	1	1	-		

PART NO. INDEX

K 1

Part Number	Address	Page	Ref.
06000			
06113-KRN-710	F1	55	1
06113-KSC-700	F1	55	1
06114-KRN-700	F1	55	2
06115-KRN-700	F2	56	1
06115-KRN-A00	F2	56	1
06116-KSC-700	F2	56	2
06405-KSC-003	I1	89	1
06420-KSC-000	H4	76	1
06420-MEY-000	H4	76	1
06421-KSC-000	H4	76	2
06421-MEY-000	H4	76	2
06431-MA3-405	G13	69	1
06435-KRN-711	G16	72	1
06435-KRN-712	G16	72	1
06435-KZ4-J41	G16	72	1
06440-KZ4-J40	G14	70	1
06451-MZ2-405	G16	72	2
11000			
11100-KSC-670	E3	41	1
11100-KSC-671	E3	41	1
11100-KSC-A10	E3	41	1
11100-KSC-A20	E3	41	1
11102-KRN-670	D10	32	1
11105-KSC-670	E3	41	2
11107-KSC-670	E3	41	3
11108-KSC-670	E3	41	4
11191-KRN-670	E3	41	5
	F2	56	1
11191-KRN-850	E3	41	5
	F2	56	1
11191-KRN-A10	E3	41	5
11200-KSC-305	E5	43	41
11200-KSC-672	E3	41	6
11200-KSC-673	E3	41	6
11200-KSC-A10	E3	41	6
11200-KSC-A20	E3	41	6
11206-KRN-670	E3	41	7
11210-KRN-730	E5	43	38
11331-KSC-670	D10	32	2
11333-KRN-670	D14	36	1
11340-KRN-670	D14	36	2
11351-KSC-670	D10	32	3
11352-KRN-671	D10	32	4
	F2	56	1
11394-KRN-670	D10	32	5
	F2	56	1
11394-KRN-A00	D10	32	5
	F2	56	1
11395-KRN-670	D14	36	3
	F2	56	1
12000			
12010-KRN-672	D2	24	1
12010-KRN-673	D2	24	1
12010-KRN-674	D2	24	1
12010-KSC-D10	D2	24	1
12100-KRN-670	D9	31	2
12100-KRN-671	D9	31	2
12100-KRN-672	D9	31	2
12100-KRN-730	D9	31	2
12191-KRN-671	D9	31	3
12191-KRN-731	D9	31	3
	F1	55	1
12204-KRN-P00	D2	24	2
12205-KRN-P00	D2	24	3
12206-881-310	I10	98	1
12209-GB4-681	D4	26	1
12226-MEB-670	D1	23	1
	F1	55	2
12251-KRN-671	D2	24	4
	F1	55	1
12251-KRN-731	D2	24	4
	F1	55	1
12310-KRN-670	D1	23	2
12316-KRN-670	D1	23	3
12391-KRN-670	D1	23	4
	F1	55	1
13000			
13000-KSC-670	E6	44	1
13000-KSC-671	E6	44	1
13000-KSC-A10	E6	44	1
13011-KRN-670	E6	44	2
13011-KRN-850	E6	44	2
13101-KRN-670	E6	44	3
13101-KRN-850	E6	44	3
13111-KRN-670	E6	44	4
13111-KRN-850	E6	44	4
13115-147-000	D11	33	1
13115-KM7-700	E6	44	5
13331-360-000	E6	44	6
13415-KRN-670	E2	40	1
13420-KSC-670	E7	45	1
13420-KSC-A10	E7	45	1
13422-KRN-670	E7	45	2
13422-KRN-A00	E7	45	2
14000			
14100-KSC-670	D4	26	2
14102-KRN-670	D4	26	3
14105-KRN-670	D4	26	4
14106-KRN-670	D4	26	5
14106-KRN-A00	D4	26	5
14401-KRN-671	D8	30	1
14440-KRN-670	D4	26	6
14451-KSC-670	D4	26	7
14451-KSC-671	D4	26	7
14510-KRN-670	D8	30	2
14515-KF0-000	D8	30	3
14520-KRN-670	D8	30	4
14520-KRN-671	D8	30	4
14560-MEN-671	D8	30	5
	F1	55	1
14620-KRN-670	D8	30	6
14711-KRN-670	D4	26	8
14721-KRN-670	D4	26	9
14731-KRN-670	D4	26	10
14731-KRN-A00	D4	26	10
14751-KRN-670	D4	26	11
14761-KRN-670	D4	26	12
14761-KRN-671	D4	26	12
14771-KRN-670	D4	26	13
14771-KRN-A00	D4	26	13
14772-KRN-A10	D4	26	13
14775-KRN-670	D4	26	14
14781-MAT-000	D4	26	15
14901-KT7-013	D4	26	16
	D6	28	17
14902-KT7-013	D4	26	16
	D6	28	17
14903-KT7-013	D4	26	16
	D6	28	17
14904-KT7-013	D4	26	16
	D6	28	17
14905-KT7-013	D4	26	16
	D6	28	17
14906-KT7-013	D5	27	16
	D6	28	17
14907-KT7-013	D5	27	16
	D6	28	17
14908-KT7-013	D5	27	16
	D6	28	17
14909-KT7-013	D5	27	16
	D6	28	17
14910-KT7-013	D5	27	16
	D6	28	17
14911-KT7-013	D5	27	16
	D6	28	17
14912-KT7-013	D5	27	16
	D6	28	17
14913-KT7-013	D5	27	16
	D7	29	17
14914-KT7-013	D5	27	16
	D7	29	17
14915-KT7-013	D5	27	16
	D7	29	17
14916-KT7-013	D5	27	16
	D7	29	17
14917-KT7-013	D5	27	16
	D7	29	17
14918-KT7-013	D5	27	16
	D7	29	17
14919-KT7-013	D5	27	16
	D7	29	17
14920-KT7-013	D5	27	16
	D7	29	17
14921-KT7-013	D5	27	16
	D7	29	17
14922-KT7-013	D5	27	16
	D7	29	17
14923-KT7-013	D5	27	16
	D7	29	17
14924-KT7-013	D5	27	16
	D7	29	17
14925-KT7-013	D5	27	16
	D7	29	17
14926-KT7-013	D5	27	16
	D7	29	17
14927-KT7-013	D5	27	16
	D7	29	17
14928-KT7-013	D5	27	16
	D7	29	17
14929-KT7-013	D5	27	16
	D7	29	17
14930-KT7-013	D5	27	16
	D7	29	17
14931-KT7-013	D5	27	16
	D7	29	17
14932-KT7-013	D5	27	16
	D7	29	17
14933-KT7-013	D5	27	16
	D7	29	17
14934-KT7-013	D5	27	16
	D7	29	17
14935-KT7-013	D6	28	16
	D7	29	17
14936-KT7-013	D6	28	16
	D7	29	17
14937-KT7-013	D6	28	16
	D7	29	17
14938-KT7-013	D6	28	16
	D7	29	17
14939-KT7-013	D6	28	16
	D7	29	17
14940-KT7-013	D6	28	16
	D7	29	17
14941-KT7-013	D6	28	16
	D7	29	17
14942-KT7-013	D6	28	16
	D7	29	17
14943-KT7-013	D6	28	16
	D7	29	17
14944-KT7-013	D6	28	16
	D7	29	17
14945-KT7-013	D6	28	16
	D7	29	17
14946-KT7-013	D6	28	16
	D7	29	17
14947-KT7-013	D6	28	16
	D7	29	17
14948-KT7-013	D6	28	16
	D7	29	17
14949-KT7-013	D6	28	16
	D7	29	17
14950-KT7-013	D6	28	16
	D7	29	17
14951-KT7-013	D6	28	16
	D7	29	17
14952-KT7-013	D7	29	17
14953-KT7-013	D7	29	17
14954-KT7-013	D7	29	17
14955-KT7-013	D7	29	17
14956-KT7-013	D7	29	17
14957-KT7-013	D7	29	17
14958-KT7-013	D7	29	17
14959-KT7-013	D7	29	17
14960-KT7-013	D7	29	17
14961-KT7-013	D7	29	17
14962-KT7-013	D7	29	17
14963-KT7-013	D7	29	17
14964-KT7-013	D7	29	17
14965-KT7-013	D7	29	17
14966-KT7-013	D7	29	17
14967-KT7-013	D7	29	17
14968-KT7-013	D7	29	17
14969-KT7-013	D7	29	17
15000			
15111-KRN-670	D12	34	1
15133-KRN-670	D12	34	2
15201-KSC-670	E13	51	1
15220-MEB-770	D14	36	4
15331-324-000	D12	34	3
15332-324-000	D12	34	4
15412-MEN-671	D14	36	5
15414-MEB-670	D14	36	6
15421-KK0-000	E3	41	8
15611-KA3-710	D10	32	6
15650-KRN-670	D14	36	7
15707-634-000	H11	83	1
15771-551-000	H11	83	2
16000			
16010-KRN-671	E14	52	1
16010-KSC-671	E16	54	45
16011-KZ3-J11	E14	52	2
16011-MEN-851	E14	52	2
16013-MEB-671	E14	52	3
16014-KRN-671	E14	52	4
16014-KRN-731	E14	52	4
16015-KSC-671	E14	52	5
16015-KSC-A11	E16	54	46
16015-MEN-851	E14	52	5
16016-KSC-671	E14	52	6
16016-KSC-A11	E14	52	6
16018-MEB-671	E14	52	7
16018-MEY-A11	E14	52	7
16019-MEB-671	E14	52	8
16021-KRN-671	E14	52	9
16021-MEN-A01	E14	52	9
16028-MEB-671	E14	52	10
16028-MEN-A01	E14	52	10
16029-MEB-671	E14	52	11
16029-MEY-A11	E14	52	11
16032-KSC-D11	E14	52	12
16032-KSC-D21	E15	53	12

4

PART NO. INDEX

K 2

Part Number	Address	Page	Ref.
16032-MEB-671	E14	52	12
16033-MEB-671	E15	53	13
16033-MEN-A01	E15	53	13
16037-MEB-671	E15	53	14
16038-KRN-671	E15	53	15
16046-MEB-671	E15	53	16
16060-KSC-671	E15	53	17
16076-ND5-004	E16	54	48
16080-HP1-601	E15	53	18
16080-MEB-671	E15	53	18
16081-KRN-671	E15	53	19
16083-MEB-671	E15	53	20
16088-KRN-A01	E16	54	47
16100-KSC-671	E15	53	21
16100-KSC-673	E15	53	21
16100-KSC-674	E15	53	21
16100-KSC-D12	E15	53	21
16100-KSC-D22	E15	53	21
16112-HP1-A01	E15	53	22
16112-MEB-671	E15	53	22
16112-MEY-A11	E15	53	22
16157-MEN-671	E15	53	23
16157-MEN-A01	E15	53	23
16163-MEB-671	E15	53	24
16165-MEB-671	E15	53	25
16165-MEY-A11	E15	53	25
16172-MEB-671	E15	53	26
16177-MEB-671	E15	53	27
16178-MEB-671	E15	53	28
16178-MEN-851	E15	53	29
16179-428-670	E15	53	30
16179-KSC-671	E15	53	30
16179-KZ4-690	E15	53	29
16185-MEN-671	E15	53	31
16196-MEB-671	E15	53	32
16196-MEN-851	E15	53	32
16197-MEB-671	E15	53	33
16198-MEB-671	E15	53	34
16199-KSC-671	E15	53	35
16203-KSC-D12	E15	53	36
16211-KRN-670	D2	24	5
16218-KSC-670	D2	24	6
16218-MCJ-000	D2	24	7
16222-MV4-300	D2	24	8
16234-MEN-671	E15	53	36
16950-KSC-003	H6	78	1
16950-KSC-A21	H8	80	1
16952-KCY-671	H6	78	2
	H8	80	2
16955-KSC-003	H6	78	3
16955-KSC-A21	H8	80	3
16959-MY1-000	H11	83	3
16961-MCT-010	E3	41	9
16965-VM0-771	H11	83	4
16997-467-000	H6	78	4
	H8	80	4

17000

Part Number	Address	Page	Ref.
17211-KSC-000	H11	83	5
17212-MEN-670	H11	83	6
17213-KSC-000	H11	83	7
17214-MEN-670	H11	83	8
17217-MEB-770	H11	83	9
17218-KRN-000	H11	83	10
17218-KSC-000	H11	83	11
17219-KSC-000	H11	83	12
17221-KSC-000	H11	83	13
17224-KN5-670	H11	83	14
17225-KN5-670	H11	83	15
17250-KSC-000	H11	83	16
17250-KSC-010	H11	83	16
17253-KSC-000	H11	83	17
17291-KSC-000	H11	83	18
17316-611-000	H11	83	20
17316-MN1-670	H11	83	19
17358-HA0-680	H11	83	21
17359-MAG-L00	H12	84	22
17370-419-700	H12	84	23
17372-KRN-000	H12	84	24
17374-KRN-000	H12	84	25
17375-KSC-000	H12	84	26
17509-KZ3-B00	H6	78	5
	H8	80	5
17510-KSC-000	H6	78	6
17510-KSC-A20	H8	80	6
17512-KRN-000	H6	78	7
17512-KRN-010	H6	78	7
17512-KSC-A20	H8	80	7
17515-KSC-000	H6	78	8
17516-KZ3-B00	H6	78	9
	H8	80	8
17518-KZ4-710	H6	78	10
	H8	80	9
17521-KZ4-J20	H6	78	11
	H8	80	10
17620-MEB-670	H6	78	12
	H8	80	11
17624-KT1-780	H6	78	13
	H8	80	12
17681-KSC-000	H6	78	14
17681-KSC-A20	H8	80	13
17684-KSC-000	H6	78	15
17684-KSC-A20	H8	80	14
17685-KSC-000	H6	78	16
17900-KSC-A10	G5	61	34
17910-KSC-000	G3	59	1
17913-KB7-000	G3	59	2
17920-KSC-000	G3	59	3
17950-KSC-000	G3	59	4
17950-KSC-010	G3	59	4

18000

Part Number	Address	Page	Ref.
18291-KPS-900	H13	85	1
18291-MM5-860	F1	55	1
	H13	85	2
18293-GZ5-000	G1	57	1
18310-KSC-010	H13	85	3
18310-KSC-A20	H13	85	3
18320-KSC-000	H13	85	4
18323-KRN-000	H13	85	5
18324-KRN-000	H13	85	6
18334-ML3-680	H6	78	17
	H8	80	15
18340-KSC-A20	H13	85	7
18355-KSC-000	H13	85	7
18355-KSC-A10	H13	85	7
18374-MG7-701	H13	85	8
18392-MK4-000	H13	85	9
18601-MBW-003	E3	41	10

19000

Part Number	Address	Page	Ref.
19000-KSC-000	J2	106	1
19000-KSC-D00	J2	106	12
19009-KSC-000	J2	106	2
19009-KSC-671	J2	106	2
19010-KSC-003	I10	98	2
19010-KSC-640	I10	98	2
19010-KSC-641	I10	98	2
19010-KSC-A11	I10	98	2
19014-KEA-003	J2	106	3
19015-KRN-003	I10	98	3
19015-KRN-731	I10	98	3
19015-KSC-A11	I10	98	3
19020-KSC-300	J2	106	4
19030-KSC-670	J2	106	5
19030-KSC-671	J2	106	5
19033-KRN-000	I10	98	4
19033-KRN-010	I10	98	4
19037-KRN-003	I10	98	5
19037-KRN-640	I10	98	5
19037-KRN-641	I10	98	5
19051-KRN-000	I10	98	6
19052-MAC-680	I10	98	7
19055-KRN-003	I10	98	8
19055-KRN-640	I10	98	8
19055-KRN-641	I11	99	8
19061-KRN-000	I11	99	9
19062-KRN-000	I11	99	10
19064-KRN-000	I11	99	11
19064-KSC-000	I11	99	32
19071-KSC-000ZB	H6	78	18
19071-KSC-730ZA	H6	78	18
19071-KSC-A00ZA	H6	78	18
19071-KSC-A10ZA	H6	78	18
19071-KSC-A20ZA	H8	80	16
19072-KSC-000ZB	H6	78	19
19072-KSC-730ZA	H7	79	19
19072-KSC-A00ZA	H7	79	19
19072-KSC-A10ZA	H7	79	19
19072-KSC-A20ZA	H8	80	17
19104-KSC-000	I11	99	12
19104-ME9-000	I11	99	13
19105-KSC-000	I11	99	14
19105-KSC-A10	I11	99	14
19105-MG8-000	I11	99	15
19107-MG8-000	I11	99	16
19110-KSC-000	I11	99	17
19215-KRN-670	D13	35	1
19215-KRN-A00	D13	35	1
19221-KRN-670	D13	35	2
19221-KRN-A00	D13	35	2
19226-KRN-670	D13	35	3
	F2	56	1
19240-KSC-670	D13	35	4
19245-KRN-670	E7	45	3
19245-KRN-671	E7	45	3
19246-KSC-670	E7	45	4
19506-KS6-700	I11	99	18
19508-KA3-710	H13	85	10
19523-KRN-730	D2	24	9
19523-MEB-670	D2	24	9

22000

Part Number	Address	Page	Ref.
22100-KSC-670	D11	33	2
22100-KSC-A10	D11	33	2
22120-KRN-A00	D11	33	3
22120-KSC-670	D11	33	3
22125-435-000	D11	33	4
22201-KSC-670	D11	33	5
22202-KSC-670	D11	33	6
22321-KF0-770	D11	33	7
22351-KZ4-A90	D11	33	8
22352-KZ4-A90	D11	33	9
22401-KSC-670	D11	33	10
22402-435-000	D11	33	11
22810-KSC-670	E3	41	11
22810-KSC-A10	E3	41	11
22813-KRN-670	E3	41	12
22838-KSC-670	E1	39	1
22851-KZ3-J20	D11	33	12
22870-KSC-000	G3	59	5

23000

Part Number	Address	Page	Ref.
23121-KSC-670	E2	40	2
23210-KSC-670	E8	46	1
23210-KSC-A10	E8	46	1
23221-KSC-670	E8	46	2
23221-KSC-A10	E8	46	2
23225-KSC-670	E8	46	3
23411-KSC-670	E8	46	4
23413-KSC-670	E8	46	5
23421-KSC-670	E8	46	6
23431-KSC-670	E8	46	7
23432-KSC-670	E8	46	8
23441-KSC-670	E8	46	9
23451-KSC-670	E8	46	10
23452-KSC-670	E8	46	11
23461-KSC-670	E8	46	12
23462-KSC-670	E8	46	13
23471-KSC-670	E8	46	14
23472-KZ4-000	E8	46	15
23481-KSC-670	E8	46	16
23491-KSC-670	E8	46	17
23801-KSC-670	E8	46	18
23802-KSC-670	E8	46	19
23810-KSC-670	D14	36	8
23812-KSC-670	D14	36	9

24000

Part Number	Address	Page	Ref.
24211-KSC-670	E11	49	1
24221-KSC-670	E11	49	2
24231-KSC-670	E11	49	3
24241-KSC-670	E11	49	4
24242-KSC-670	E11	49	5
24311-KRN-A00	E11	49	6
24311-KSC-670	E11	49	6
24312-KA3-741	E11	49	7
24315-HA0-000	E11	49	8
24321-KZ4-620	E11	49	9
24322-MM4-000	E11	49	10
24324-KA3-711	E11	49	11
24325-KA3-711	E11	49	12
24326-KBH-901	E11	49	13
24328-KRN-670	E11	49	14
24329-KA3-740	E11	49	15
24430-KA3-740	E11	49	16
24435-KZ4-690	E11	49	17
24610-KRN-670	E11	49	18
24610-KRN-730	E11	49	18
24651-MEB-670	E11	49	19
24652-HA0-000	E11	49	20
24700-KRN-000	H14	86	1

28000

Part Number	Address	Page	Ref.
28110-KSC-670	E2	40	3
28115-KSC-670	E2	40	4
28120-KSC-670	E2	40	5
28125-MT7-004	E2	40	6
28127-MS2-612	E2	40	7
28131-KSC-670	E2	40	8
28141-KSC-670	E2	40	9
28210-KSC-670	E13	51	2
28230-KRN-670	E13	51	3
28237-KSC-670	D11	33	13
28241-KA3-710	E13	51	4
28242-KA3-710	E13	51	5
28251-KZ4-000	E13	51	6
28261-KA3-710	E13	51	7
28262-KS6-701	E13	51	8
28282-KZ4-B00	E13	51	9
28300-KRN-000	H14	86	2
28302-KRN-000	H14	86	3
28306-MEN-670	H14	86	4
28333-KK0-000	H14	86	5

4

PART NO. INDEX

Part Number	Address	Page	Ref.
30000			
30401-KSC-000	I9	97	1
30410-KSC-671	I9	97	2
30410-KSC-A01	I9	97	2
30410-KSC-D11	I9	97	2
30410-KSC-D21	I9	97	2
30700-KRN-670	I9	97	3
31000			
31100-KSC-671	D16	38	1
31100-KSC-A11	D16	38	1
31200-KSC-671	E1	39	2
31201-MBE-008	E1	39	3
31204-KS5-901	E1	39	4
31205-MBE-008	E1	39	5
31206-MBE-008	E1	39	6
31207-MBE-008	E1	39	7
31500-KY4-905	I8	96	1
31505-KSC-000	I8	96	2
31600-KSC-671	I9	97	4
31700-KSC-D00	J2	106	13
31911-MBW-E11	D2	24	10
31912-MBW-E11	D2	24	10
31921-MBW-E12	D2	24	10
31922-MBW-E12	D2	24	10
32000			
32100-KSC-671	I9	97	5
32100-KSC-A00	I9	97	5
32100-KSC-A10	I9	97	5
32100-KSC-A20	I9	97	5
32110-KSC-D00	J2	106	14
32112-KRN-670	D16	38	2
32171-GF9-621	D16	38	3
	G3	59	6
32401-KSC-670	I8	96	3
32401-KSC-A10	I8	96	3
32410-KSC-670	I8	96	4
32410-KSC-A10	I8	96	4
32411-253-000	I8	96	5
32414-MCF-000	I8	96	6
32601-KSC-670	I8	96	7
32601-KSC-A10	I8	96	7
33000			
33103-KSC-670	G1	57	2
33107-KAE-770	G1	57	3
33107-KAE-771	G1	57	3
33113-MBW-D21	G1	57	4
33117-KBR-730	G1	57	5
33130-KSC-672	G1	57	6
33130-KSC-A21	G1	57	6
33130-MEY-670	G1	57	6
33150-KSC-673	G1	57	7
33150-KSC-A21	G1	57	7
33701-KSC-671	I7	95	1
33701-KSC-A00	I7	95	1
34000			
34901-GJ1-003	G1	57	8
35000			
35130-KSC-670	G3	59	7
35130-KSC-A10	G3	59	7
35150-KSC-671	G3	59	8
35340-ML4-005	G3	59	9
35701-MG9-950	J2	106	15
35850-KK6-740	I8	96	8
37000			
37200-MN1-731	G2	58	1
37215-KAF-008	I7	95	2
37760-MT2-003	J2	106	6
38000			
38501-GAM-007	I9	97	6
	J2	106	16
38506-MY2-691	I9	97	7
	J2	106	17
40000			
40545-KSC-003	I1	89	2
41000			
41201-KSR-J00	H4	76	3
41203-KZ4-J30	H4	76	3
41204-KZ4-J30	H4	76	3
41231-KZ4-J20	H4	76	4
42000			
42301-KZ4-J40	H4	76	5
42305-KZ4-J40	H4	76	6
42306-KZ4-J20	H4	76	7
42311-KZ4-J40	H4	76	8
42620-KZ4-J20	H4	76	9
42635-KRN-710	H4	76	10
42635-MEN-000	H4	76	10
42650-KSC-000	H4	76	11
42650-KSC-A20	H4	76	11
42650-MEY-000	H4	76	11
42701-KSC-003	H4	76	12
42701-KSC-A21	H4	76	12
42711-KSC-004	H4	76	13
42711-KSC-D01	H5	77	13
42714-KA3-710	G14	70	2
	H5	77	14
42715-MA0-770	H5	77	15
42717-329-000	H5	77	16
43000			
43108-KZ4-J41	G16	72	3
43112-KZ4-J41	G16	72	4
43131-KW3-006	G16	72	5
43150-KRN-711	G16	72	6
43150-KZ4-J41	G16	72	6
43190-KRN-711	G16	72	7
43190-KZ4-J41	G16	72	7
43215-KZ4-J41	G16	72	8
43310-KZ4-J41	H2	74	1
43330-KZ4-J40ZA	G16	72	9
43340-KZ4-J40ZA	G16	72	10
43340-MEY-000ZA	H1	73	10
43351-KZ4-J40	H5	77	17
43351-MEN-A10	H5	77	32
43352-568-003	G13	69	2
	H1	73	11
43353-461-771	G13	69	3
	H1	73	12
43468-KZ3-B00	I1	89	3
43500-KZ4-J42	H2	74	2
43500-KZ4-J43	H2	74	2
43504-MB2-006	H2	74	3
43513-KZ4-J41	H2	74	4
43514-KS6-701	H12	84	27
43520-KZ4-J42	H2	74	5
43520-KZ4-J43	H2	74	5
43521-KZ4-J41	H2	74	6
43522-KZ4-J41	H2	74	7
43530-KZ4-J41	H2	74	8
44000			
44301-KSC-000	G14	70	3
44311-KZ4-J40	G14	70	4
44620-MAC-680	G14	70	5
44635-KSC-000	G14	70	6
44650-KSC-000	G14	70	7
44650-KSC-A20	G14	70	7
44701-MEN-003	G14	70	8
44701-MEN-A11	G14	70	8
44711-MEN-004	G14	70	9
44711-MEN-J01	G14	70	9
44711-MEY-641	G14	70	9
44712-300-004	H5	77	18
44712-400-004	G14	70	10
44712-434-003	H5	77	18
44712-KA3-711	G14	70	10
44713-300-003	H5	77	19
44713-300-004	H5	77	19
44713-KS6-641	G14	70	11
44713-MG7-003	G14	70	11
44715-MA0-770	G14	70	12
44800-KSC-003	G15	71	13
44830-KSC-000	G2	58	2
44831-KSC-300	G2	58	3
44832-KSC-000	G8	64	1
44832-KSC-A00	G8	64	1
45000			
45105-MY6-405	G13	69	4
45105-MY6-415	G13	69	4
45107-KZ4-J31	G13	69	5
45107-MCT-006	H1	73	13
45108-MY1-006	G13	69	6
45111-MAJ-G41	H1	73	14
45112-KS6-701	G13	69	7
45125-KSC-000	G6	62	1
45125-KSC-A11	G6	62	1
45125-MEY-003	G6	62	1
45131-HA5-672	G13	69	8
45132-166-016	G13	69	9
	H1	73	15
45133-MA3-006	G13	69	10
	H1	73	16
45150-MEN-006	G13	69	11
45190-MEN-006	G13	69	12
45203-MG3-016	G13	69	13
45215-HA5-672	G13	69	14
45351-KZ4-J30	G15	71	14
45351-MEN-A10	G15	71	26
45461-GBF-J00	G10	66	1
45461-MEN-000	G12	68	37
45461-MEY-670	G12	68	38
45462-GBF-J00	G10	66	2
45462-KAE-740	G10	66	3
45462-MEN-000	G12	68	39
45468-KS7-830	G7	63	1
	G8	64	2
45504-KN5-006	G6	62	2
45510-KCE-671	G6	62	3
45513-KCE-671	G6	62	4
45517-GW0-751	G6	62	5
45518-KA3-731	G6	62	6
45520-KA3-731	G6	62	7
45523-KA3-731	G6	62	8
45523-MEB-003	G6	62	9
45530-KCE-671	G6	62	10
46000			
46182-500-013	H2	74	9
46182-MEL-D21	H3	75	9
46504-KZ4-J41	H3	75	10
46510-KSC-000	H14	86	6
46511-KZ4-J00	H14	86	7
46513-KSC-000	H14	86	8
46513-KSC-A10	H14	86	8
46525-KK0-003	H14	86	9
50000			
50010-KSC-000	I12	100	1
50010-KSC-730	I12	100	1
50010-KSC-731	I12	100	1
50010-KSC-A10	I12	100	1
50100-KSC-A10	I13	101	29
50125-KSC-000	H16	88	1
50126-KRN-000	I12	100	2
50129-KSC-000	I11	99	19
50129-MEY-A10	I11	99	19
50130-KSC-000	G2	58	4
50130-KSC-010	G2	58	4
50142-KSC-D00	J2	106	18
50143-KSC-D00	J2	106	19
50170-KSC-A20	I13	101	28
50197-KRN-000	I12	100	3
50200-KSC-010	I12	100	4
50200-KSC-730	I12	100	4
50283-KSC-300	I6	94	1
	I12	100	5
50283-MEN-A00	I12	100	6
50283-MR7-300	I12	100	6
			9
50360-KRN-000	I12	100	7
50360-KRN-A10	I12	100	7
50370-KSC-000	I12	100	8
50407-KRN-730	I12	100	10
50407-KSC-000	I12	100	10
50408-KRN-730	I12	100	11
50408-KSC-000	I12	100	11
50500-KA3-820	H16	88	2
50530-KSC-000	H16	88	3
50540-KSC-000	H16	88	4
50603-KZ4-J40	H15	87	1
50610-MEN-670	H15	87	2
50610-MEN-671	H15	87	2
50611-MEN-670	H15	87	3
50611-MEN-671	H15	87	3
50616-MEN-670	H15	87	4
50617-KZ4-J40	H15	87	5
50618-KZ4-J40	H15	87	6
50642-MEN-670	H15	87	7
51000			
51401-KSC-003	G10	66	4
51402-KSC-003	G10	66	4
51403-KSC-003	G10	66	4
51410-KSC-003	G10	66	5
51410-MEY-003	G10	66	5
51412-KZ3-B01	G10	66	6
51414-KZ3-B01	G10	66	7
51415-KZ3-B01	G10	66	8
51420-KSC-003	G10	66	9
51420-KSC-A01	G10	66	9
51430-KSC-003	G10	66	10
51430-KSC-A01	G10	66	10
51431-KZ3-B01	G10	66	11
51437-KZ3-J41	G10	66	12
51440-KSC-003	G10	66	13
51447-KZ3-003	G10	66	14
51450-KSC-003	G10	66	15

PART NO. INDEX

Part Number	Address	Page	Ref.
51450-KSC-A01	G10	66	15
51451-KZ3-B01	G10	66	16
51453-KZ3-B01	G10	66	17
51456-KZ3-J41	G11	67	18
51476-KZ3-711	G11	67	19
51476-MEY-003	G11	67	19
51480-KSC-003	G11	67	20
51480-KSC-A01	G11	67	20
51480-KSC-A21	G11	67	20
51490-KSC-003	G11	67	21
51520-KSC-003	G11	67	22
51520-KSC-A01	G11	67	22
51580-KSC-003	G11	67	23
51580-KSC-A01	G11	67	23
51580-KSC-A21	G11	67	23
51610-MEB-750ZA	G11	67	24
51610-MEY-000ZA	G11	67	25
51614-KZ4-J40ZA	G15	71	15
51614-KZ4-J41ZA	G15	71	15
51620-KCZ-J70ZA	G11	67	25
51620-MEN-000ZA	G11	67	24
52000			
52101-KZ4-J40	I1	89	4
52141-KZ3-J40	I1	89	5
52141-KZ4-J40	I1	89	6
52143-KZ3-860	I1	89	7
52143-KZ4-J40	I1	89	8
52146-KRN-711	I1	89	9
52146-MEN-000	I1	89	9
52146-MEN-J00	I2	90	37
52147-KRN-710	I2	90	36
52147-MEN-J00	I2	90	36
52148-MEN-000	I1	89	10
52156-353-300	I12	100	12
52156-ML3-910	I1	89	11
52160-MEN-000	I1	89	12
52170-KRN-710	I1	89	13
52170-MEB-750	I1	89	13
52171-KR6-000	I1	89	14
52175-KSK-000	I1	89	15
52176-KRN-710	I1	89	16
52176-KZ3-J40	I1	89	16
52200-KRN-A10	I1	89	17
52200-KRN-J00	I1	89	17
52200-KSC-A00	I1	89	17
52200-KSR-J00	I1	89	17
52400-KSC-003	I3	91	1
52400-KSC-A01	I3	91	1
52400-KSC-A11	I3	91	1
52401-KSC-003	I3	91	2
52401-KZ3-J41	I3	91	2
52402-KZ3-J21	I3	91	2
52403-KZ3-J41	I3	91	2
52410-KSC-003	I3	91	3
52410-KSC-A01	I3	91	3
52419-KZ3-J21	I3	91	4
52421-KSC-003	I3	91	5
52421-KSC-A01	I3	91	5
52422-KZ3-J31	I3	91	6
52423-KZ3-J21	I3	91	7
52425-381-771	I3	91	9
52425-KRN-671	I3	91	8
52425-MEY-671	I3	91	8
52426-KSC-003	I3	91	10
52426-KSC-A01	I3	91	10
52427-KZ3-891	I3	91	11
52428-KRN-711	I3	91	12
52428-KZ3-J31	I3	91	12
52429-KSC-003	I3	91	13
52429-KZ3-J41	I4	92	13
52431-KZ3-J31	I4	92	14
52434-KZ3-J21	I4	92	15
52434-KZ3-J31	I4	92	16
52435-KZ3-J21	I4	92	17
52436-KSC-003	I4	92	18
52436-MEN-671	I4	92	18
52438-KA4-741	I4	92	19
52440-MEN-671	I4	92	20
52451-KZ3-891	I4	92	21
52452-KS7-831	I4	92	22
52453-KRN-711	I4	92	23
52453-KS7-831	I4	92	23
52455-KZ3-J21	I4	92	24
52463-KZ4-B00	I4	92	25
52463-KZ4-J40	I4	92	26
52464-KRN-710	I4	92	25
52464-KZ4-B00	I4	92	27
52464-KZ4-J20	I4	92	28
52465-KSC-000	I4	92	29
52465-KSR-710	I4	92	29
52466-KRN-710	I4	92	27
52473-KZ4-J20	I4	92	30
52475-KZ4-J20	I4	92	31
52476-KZ4-J20	I5	93	32
52479-KSC-A10	I5	93	33
52479-KSR-710	I5	93	33
52479-KZ4-J40	I5	93	33
52486-KZ3-J21	I5	93	34
52487-KA4-831	I5	93	35
53000			
53100-MEN-670	G7	63	2
53121-MEN-670	G7	63	3
53121-MEN-671	G7	63	3
53132-KA3-831	G7	63	4
53132-KZ4-J20	G7	63	4
53133-KA3-832	G7	63	5
53140-MEB-671	G3	59	10
53165-GBF-J60	G3	59	11
53166-GBF-J60	G3	59	12
53167-MEB-671	G3	59	13
53167-MEB-672	G3	59	13
53168-KSC-000	G3	59	14
53168-KSC-010	G4	60	14
53169-MEB-670	G4	60	15
53170-MEB-003	G6	62	11
53172-KSC-000	G4	60	16
53173-KSC-000	G4	60	17
53174-KCE-670	G4	60	18
53174-KN5-006	G6	62	12
53176-ML3-791	G6	62	13
53177-KSC-000	G4	60	19
53178-KSC-000	G4	60	20
53179-MEN-671	G4	60	21
53189-GCS-000	H12	84	28
53190-MEN-670	G4	60	22
53192-MEN-670	G4	60	23
53214-KZ3-861	G8	64	3
53214-KZ4-701	G8	64	4
53219-KSC-000	G8	64	5
53229-KZ4-J30	G8	64	6
53300-KSC-000	G7	63	6
61000			
61110-MEN-670	G9	65	1
61300-KSC-000ZA	G1	57	9
61300-KSC-A20ZA	G1	57	14
61302-KSC-A20	G1	57	15
61304-958-003	I6	94	2
64000			
64308-GG2-000	H12	84	29
64508-KV3-000	H12	84	30
77000			
77100-KSC-010	H10	82	1
77100-KSC-A10	H10	82	1
77100-KSC-A11	H10	82	1
77101-KSC-000	H10	82	2
77101-KSC-A10	H10	82	2
77101-KSC-A11	H10	82	2
77302-124-000	I6	94	3
80000			
80101-KSC-000ZB	I6	94	4
80103-GJ5-000	G2	58	5
80130-KSC-000	I7	95	3
83000			
83501-MG7-000	G1	57	10
	I7	95	4
83505-KM4-000	H10	82	3
83510-KSC-000	H10	82	4
83512-KA4-700	H13	85	11
83513-KSC-000	H10	82	5
83514-KSC-000	H10	82	6
83515-KS7-830	H10	82	7
83610-KSC-000	H10	82	8
84000			
84706-415-000	H7	79	20
86000			
86150-KPG-901	G7	63	7
87000			
87126-KSC-000ZA	I16	104	1
87126-KSC-730ZA	I16	104	4
87126-KSC-A00ZA	I16	104	6
87126-KSC-A10ZA	I16	104	8
87126-KSC-A20ZA	J1	105	1
87127-KSC-000ZA	I16	104	2
87127-KSC-730ZA	I16	104	5
87127-KSC-A00ZA	I16	104	7
87127-KSC-A10ZA	I16	104	9
87127-KSC-A20ZA	J1	105	2
87130-GEL-A00ZA	I16	104	3
	J1	105	3
87130-KCZ-640ZA	J1	105	4
87507-KZ3-B10	I15	103	1
87507-KZ3-B90	I15	103	1
87516-KZ1-600	I5	93	36
87516-KZ1-881	I5	93	37
87560-GBF-770	I15	103	2
87560-KSC-000	I15	103	2
87560-ML3-970	I15	103	2
87564-KRN-000	I15	103	3
89000			
89201-KS6-810	I14	102	1
89212-KZ4-J40	I14	102	2
89216-MEB-670	I14	102	3
89216-MY9-000	I14	102	3
89217-KRN-000	I14	102	4
89301-KA4-811	I14	102	5
90000			
90001-GB4-000	I11	99	20
90001-KRN-670	D2	24	11
90001-MEN-850	E3	41	13
90002-KRN-670	D2	24	12
90003-KRN-670	E3	41	13
90004-GHB-600	D8	30	7
	D10	32	14
	H1	73	17
90004-GHB-630	D8	30	8
	D14	36	10
	I13	101	27
90004-GHB-690	D14	36	11
90004-GHB-710	D14	36	12
90004-GHB-780	D14	36	13
90005-896-000	D16	38	4
90005-MCJ-000	D2	24	13
90010-MEB-670	D16	38	5
90013-MEB-670	E2	40	10
90017-MY9-790	D1	23	5
90018-ZA5-000	H8	80	18
90022-MG8-000	E11	49	21
90031-KRN-670	E4	42	14
90038-KY4-900	E7	45	5
90071-MB0-000	E1	39	8
90071-MF5-000	E8	46	20
	E11	49	22
90084-MEN-670	D2	24	14
	D14	36	14
90087-KW3-000	D10	32	7
90088-MEB-670	D8	30	9
90101-KCE-000	H13	85	12
90101-KRN-730	H8	80	19
90101-KSC-000	I12	100	13
90101-KZ3-J50	H13	85	13
	H15	87	8
	H16	88	5
90101-KZ4-J40	H15	87	9
90102-MEN-710	H10	82	13
90102-SP1-003	I7	95	5
90103-KRN-000	H14	86	10
90105-KRN-000	I12	100	14
90105-MAC-680	G15	71	16
	H5	77	20
90105-MEN-000	I2	90	18
90105-MEN-730	H8	80	20
90106-KRN-000	H7	79	21
	I12	100	15
90106-MJ0-000	G7	63	8
	G8	64	7
90107-KRN-000	I12	100	16
90107-KZ4-J40	G7	63	9
	G8	64	8
90108-KZ4-J40	G11	67	26
90108-MJ0-000	H16	88	6
90108-MN0-000	H7	79	25
90109-KSC-000	I12	100	17
90110-KZ4-J40	G13	69	15
90111-MEB-003	G6	62	14
90111-MR5-000	I8	96	9
90112-413-000	E9	47	21
90113-KZ3-000	G11	67	27
90113-MAC-780	G11	67	28
90113-MEN-670	G4	60	24
90113-MEY-A00	G4	60	24
90113-MEY-A10	G4	60	24
90114-166-006	G6	62	15
90114-MAC-780	G15	71	17
	H3	75	11
90115-KV3-700	I2	90	19
90116-KW3-000	I12	100	18
90122-KRN-000	I13	101	19
90122-MEN-670	H16	88	7
90123-KZ4-J40	H13	85	14
90123-MEN-670	H10	82	9
90124-KZ4-J40	G7	63	10

PART NO. INDEX

K 5

Part Number	Address	Page	Ref.
90124-KZ4-J40	H13	85	15
90124-MEB-770	I2	90	20
90125-KA4-000	H5	77	21
90130-KZ4-J20	I5	93	38
90130-KZ4-J40	I5	93	39
90130-MEN-840	I5	93	57
90131-KZ4-J40	I5	93	40
90131-MEN-840	I5	93	38
90131-MEY-000	I5	93	40
90145-MS9-612	G6	62	16
	H3	75	12
90147-KPB-J10	G1	57	11
90152-MEB-750	I5	93	41
90153-KZ4-710	I5	93	42
90170-MEB-670	H13	85	16
90204-MN5-000	E7	45	6
90232-MB6-680	D2	24	15
90235-KA4-000	D11	33	14
90301-473-003	G15	71	19
	H5	77	22
	I2	90	21
			23
90301-782-000	G5	61	30
90301-KZ4-J40	G15	71	18
90302-KZ3-J40	I13	101	20
90303-KRN-000	I11	99	21
90304-GE8-003	H16	88	8
90304-KZ4-J30	G7	63	11
90305-GK8-000	H12	84	31
90305-KZ3-B01	I2	90	22
90305-KZ4-J20	H5	77	23
90306-KBP-901	I5	93	43
90306-KZ4-711	G7	63	12
	I5	93	44
90308-KM3-003	J2	106	7
90309-357-000	I2	90	24
90309-ML3-791	H5	77	24
	I2	90	23
90313-GAH-780	H10	82	10
90380-KSC-000	I7	95	6
90401-KRN-670	D3	25	16
90401-KZ4-J20	H5	77	25
90402-KW6-960	E2	40	11
90403-KA3-830	I11	99	22
90404-KW3-000	E9	47	22
90404-MEN-670	H14	86	11
90406-KV3-780	H13	85	17
90410-HC4-000	I13	101	21
90433-KE1-000	E7	45	7
90435-HB3-000	E11	49	23
90437-611-000	D16	38	6
90441-KA4-700	E7	45	8
	E9	47	23
	E12	50	24
90441-KRN-670	E4	42	15
90441-KSC-670	D11	33	15
90442-397-000	D8	30	10
	F1	55	2
90446-357-000	E9	47	24
90446-KRN-670	D3	25	17
90447-KE1-000	D13	35	5
	F2	56	2
90451-155-000	E12	50	25
90451-459-770	D14	36	15
90452-166-600	E2	40	12
90452-178-000	E13	51	10
90452-KSR-A00	E9	47	27
90452-KZ4-000	E9	47	26
90453-KSR-A00	E9	47	25
90455-HM8-A40	E9	47	28
90456-KS6-000	D11	33	16
90463-ML7-000	D10	32	8
	D13	35	6
	F2	56	2
90465-MC4-000	H5	77	26
90474-333-000	E4	42	16
	F2	56	2
90482-567-000	D8	30	11
90501-124-000	G1	57	12
90501-444-000	E13	51	11
90501-GBL-730	I2	90	25
90501-KRN-000	H12	84	32
90501-KRN-710	I5	93	45
90501-KSC-670	E9	47	29
90501-KZ4-J20	H7	79	23
	H8	80	21
	H10	82	11
90501-KZ4-J40	I5	93	45
			56
90501-MEN-670	G4	60	25
90501-ML3-910	D11	33	17
90502-KRN-000	H7	79	24
90503-KRN-000	I6	94	5
90503-KZ4-J40	G7	63	13
90506-430-000	G9	65	2
90507-KA3-830	G7	63	14
90510-KSC-671	D10	32	9
90511-KRN-000	I13	101	22
90512-KRN-730	H14	86	11
90512-KZ4-J20	G9	65	3
90522-170-700	I11	99	23
90543-MV9-670	D1	23	6
	F1	55	2
90545-300-000	G6	62	17
	H3	75	13
90601-001-000	E13	51	12
90601-360-000	E9	47	30
90601-KSC-003	I11	99	24
90602-360-000	E9	47	31
90602-MEB-670	D14	36	16
90604-MEB-670	E4	42	17
90608-072-000	D11	33	18
90610-MEB-670	E4	42	18
90650-KV6-003	G4	60	26
90651-HN6-A51	H8	80	22
90651-KV6-003	I13	101	23
90651-MA5-671	G6	62	18
90652-KT1-771	I11	99	31
	I13	101	24
90672-SA0-003	D3	25	18
90701-MR7-000	D3	25	19
90705-PFF-300	H14	86	12
90751-GK1-003	D14	36	17
	F2	56	2
90901-KRN-670	E4	42	19
90901-KRN-A00	E4	42	19
90901-KSC-A20	E4	42	19
91000			
91001-147-003	D11	33	19
91001-KA4-003	D13	35	7
91001-KRN-671	E4	42	20
91001-KSR-A01	E9	47	32
	E10	48	39
91001-KZ4-J11	E9	47	32
	E10	48	39
91002-KRN-671	E4	42	21
91002-KRN-851	E4	42	21
91002-KRN-A11	E4	42	21
91004-KSC-671	E9	47	33
91004-KY4-900	E12	50	26
91004-MEB-671	E7	45	9
91005-KRN-851	E9	47	34
91005-KRN-A01	E9	47	34
91005-KSR-A01	E9	47	34
91005-MEB-671	E7	45	10
91006-KRN-A01	E10	48	39
91007-KRN-671	D7	29	18
91011-GCT-003	I2	90	26
91012-KA3-710	E9	47	35
91012-P68-003	D11	33	20
91015-KZ4-701	G8	64	9
91022-KA4-740	E4	42	22
91025-KT7-003	E2	40	13
91051-KSC-003	I5	93	46
			47
91051-KZ4-J21	H5	77	27
91052-KZ4-J21	H5	77	28
91053-719-005	E5	43	40
91053-KZ4-J21	I5	93	47
91062-MAC-681	G15	71	20
91071-MJ0-003	I2	90	27
91072-KZ3-861	I2	90	28
91074-KRN-711	I5	93	48
91074-KZ4-B01	I5	93	48
91074-MAC-741	I5	93	49
91201-148-003	D13	35	8
91201-KS6-004	G15	71	21
91201-KSR-A01	E10	48	36
91201-MEB-671	E4	42	23
91202-MEB-671	E4	42	24
91202-MEY-671	E4	42	24
91203-KA4-771	E4	42	25
91203-MEB-671	E4	42	26
91204-HP1-601	D14	36	18
91204-KRN-671	D14	36	18
91205-KA3-712	D10	32	10
91205-MEB-671	E5	43	27
91211-KRN-671	D13	35	9
91211-KSE-671	D13	35	9
91251-444-000	H14	86	13
91251-KSC-003	G15	71	22
91251-KZ4-J21	H5	77	29
91253-KZ3-861	I2	90	29
91254-KSC-003	G11	67	29
91256-KZ3-731	I5	93	50
91256-KZ3-A71	G11	67	30
91257-KZ3-891	I5	93	51
91257-MEB-751	G11	67	31
91258-KZ3-B01	G11	67	32
91262-KZ3-731	I5	93	52
91283-ML7-003	I2	90	30
91301-KSR-A01	E10	48	37
	F2	56	2
91301-KZ3-711	G12	68	33
91302-PA9-003	D14	36	19
	F2	56	2
91303-377-000	D3	25	20
	D14	36	20
	F1	55	2
	F2	56	2
91304-MJ0-003	D10	32	11
	F2	56	2
91305-KF0-003	D10	32	12
	F2	56	2
91307-035-000	D14	36	21
	F2	56	2
91307-611-000	I11	99	25
	J2	106	8
91309-425-003	E1	39	9
91312-KE7-003	D3	25	21
	F2	56	2
91319-ME5-003	G15	71	23
91320-KE1-000	D13	35	10
91320-MB0-000	E1	39	11
91320-MBE-008	E1	39	10
91351-KRN-711	I5	93	54
91351-KZ3-731	I5	93	53
91351-KZ4-B01	I5	93	54
91351-MAC-671	I5	93	55
91356-KZ3-003	G12	68	34
91356-MW0-003	G12	68	35
91370-461-000	D10	32	13
	F2	56	2
91406-166-000	I11	99	26
91410-679-000	D14	36	22
91413-679-000	H12	84	33
91422-MT8-770	H7	79	22
91560-MS8-600	H7	79	26
	H8	80	23
92000			
92301-06010-0A	D10	32	14
92900-08022-0B	D3	25	22
93000			
93301-06016-0A	E12	50	27
	E13	51	13
93401-04016-00	H3	75	14
93401-06012-08	J2	106	9
93404-06014-00	I13	101	25
93404-06020-08	D11	33	21
93500-04012-1A	G4	60	27
93500-04014-0G	G4	60	28
93500-05008-0A	I2	90	31
93500-05008-0G	I2	90	32
93500-05010-0A	G4	60	29
93600-04012-1G	G6	62	19
93600-06010-0H	E10	48	38
93891-04008-07	J2	106	10
93892-04008-18	E15	53	37
93892-04014-18	E15	53	38
93903-24380	H12	84	34
93903-25380	H12	84	35
93911-25120	G1	57	13
93913-14110	G12	68	40
93913-25410	H12	84	36
94000			
94001-06000-0S	G4	60	30
94001-08000-0S	G15	71	24
	H5	77	30
94002-05070-0S	H12	84	37
94002-06000-0S	H3	75	15
94021-05000-0S	G2	58	6
94050-06000	G6	62	20
	I11	99	27
94050-08000	H13	85	18
	I13	101	26
94050-12000	D16	38	7
94101-06800	I6	94	6
94101-08000	H13	85	19
94102-08800	H13	85	20
	H15	87	10
94103-05700	I2	90	33
94111-04000	G5	61	31
94111-08000	G15	71	25
	H5	77	31
94201-20120	H14	86	14
94201-25150	H15	87	11
94301-08100	D13	35	10
94301-08140	D10	32	15
	D14	36	23
94301-10160	D15	37	24
94301-12200	D3	25	23
	D9	31	4
94301-14200	E5	43	28
94303-08140	E2	40	14
94510-12000	E2	40	15
94510-14000	E12	50	28
94510-16000	E13	51	14
94520-14000	D15	37	25

4

PART NO. INDEX

K 6

Part Number	Address	Page	Ref.
94540-03010	H12	84	38
94591-24000	J2	106	11
95000			
95002-02079	E15	53	39
95002-02080	I11	99	28
95002-02100	E5	43	29
	I11	99	29
95002-02120	H7	79	27
	H12	84	39
95012-13001	I8	96	11
95014-22100	G7	63	15
95015-54000	H14	86	15
95018-60321	H12	84	40
95701-06010-00	G8	64	10
96000			
96001-06012-00	D7	29	19
	E5	43	30
			39
	G12	68	36
	I2	90	34
96001-06014-00	D3	25	24
	H9	81	24
	H10	82	12
96001-06016-00	G9	65	4
	H7	79	28
	H9	81	25
	H12	84	41
	I6	94	7
	I9	97	8
	I11	99	30
	I13	101	27
96001-06018-00	H7	79	29
96001-06018-07	G5	61	32
96001-06020-00	D3	25	24
	D10	32	16
96001-06020-07	G5	61	32
96001-06022-00	G5	61	33
	G6	62	21
	H14	86	16
96001-06028-00	D3	25	25
	D9	31	5
	D10	32	17
	D13	35	11
	E1	39	12
96001-06030-00	H7	79	30
	H9	81	26
96001-06030-07	D15	37	26
96001-06035-00	D10	32	18
96001-06040-00	E5	43	31
96001-06045-00	E5	43	32
	I2	90	35
96001-06050-00	I2	90	35
96001-06060-00	E5	43	33
96001-06070-00	E5	43	34
96001-06075-00	E5	43	35
96001-06085-00	D13	35	12
96211-08000	H14	86	17
96220-30178	D12	34	5
96220-40080	E12	50	29
96300-06012-00	D1	23	7
96300-08025-00	E5	43	36
96300-08070-00	E5	43	37
96600-08028-00	E2	40	16
98000			
98200-31500	I8	96	12
	I9	97	9
99000			
99101-357-1300	E16	54	40
99101-357-1320	E16	54	40
99103-440-0400	E16	54	41
99103-440-0420	E16	54	41
99104-MEB-1000	E16	54	42
99108-KSE-0600	E16	54	43
99108-MEB-0550	E16	54	43
99112-KRN-0680	E16	54	44

4

PART NAME INDEX

L 1

Part name	Address	Page	Ref.
[A]			
ADJUSTER, COMPRESSION DAMPING FORCE	I4	92	20
ADJUSTER, SPRING	I3	91	6
ARM ASSY., KICK STARTER	H14	86	2
ARM COMP., EX. ROCKER	D4	26	6
ARM SET, LINK	E14	52	7
ARM SUB ASSY., CUSHION	I4	92	29
ARM, L. STEP	H15	87	7
ARM, R. STEP	H15	87	4
ARRESTER ASSY.	H13	85	7
ARRESTER COMP., MUFFLER	H13	85	7
AXLE, FR. WHEEL	G14	70	3
AXLE, RR. WHEEL	H4	76	5
[B]			
BALL, STEEL,	H14	86	17
BAND	J2	106	15
BAND B2, BATTERY	I8	96	11
BAND B, INSULATOR	D2	24	7
BAND, AIR CLEANER CONNECTING TUBE	H12	84	40
BAND, INSULATOR	D2	24	6
BAND, L. MUFFLER	H13	85	8
BAND, TANK RR.	H6	78	9
	H8	80	8
BAND, WIRE	G4	60	26
	I11	99	31
	I13	101	23
			24
BAR, SIDE STAND	H16	88	3
BASE ASSY., ELEMENT	H11	83	8
BATTERY	I8	96	1
BEARING, BALL RADIAL, 6905	D7	29	18
BEARING, HEAD PIPE	G8	64	9
BEARING, NEEDLE THRUST	I2	90	28
BEARING, NEEDLE, 12MM	D11	33	19
BEARING, NEEDLE, 12X16X10	E5	43	40
BEARING, NEEDLE, 19X26X13	I5	93	48
BEARING, NEEDLE, 19X26X15	I5	93	48
BEARING, NEEDLE, 20X26X14	I5	93	47
BEARING, NEEDLE, 20X26X15	I5	93	46
			47
BEARING, NEEDLE, 22X29X30	I2	90	27
BEARING, NEEDLE, 27X31X16.8	D11	33	20
BEARING, NEEDLE, 30X35X20	E2	40	13
BEARING, RADIAL BALL, 12X28X7	D13	35	7
BEARING, RADIAL BALL, 17X35X10	E9	47	32
	E10	48	39
BEARING, RADIAL BALL, 17X36X10	E9	47	32
	E10	48	39
BEARING, RADIAL BALL, 17X38X10	E10	48	39
BEARING, RADIAL BALL, 22X47X14	E9	47	33
			34
BEARING, RADIAL BALL, 22X52X14	E9	47	34
BEARING, RADIAL BALL, 30X72X16	E4	42	20
BEARING, RADIAL BALL, 6003	E7	45	10
BEARING, RADIAL BALL, 6008UU	I2	90	26
BEARING, RADIAL BALL, 6904	G15	71	20
BEARING, RADIAL BALL, 69052RS	H5	77	27
BEARING, RADIAL BALL, 6905RS	H5	77	28
BEARING, RADIAL BALL, 6905U	E12	50	26
BEARING, SHELL, 33X38X8	E4	42	22
BEARING, SPECIAL ROLLER	E4	42	21
BEARING, SPECIAL ROLLER, 20X32X14	E7	45	9
BEARING, SPHERICAL, 10	I5	93	49
BINDER	E15	53	29
			30
BLADDER	I4	92	21
BODY COMP., FRAME	I13	101	29
BODY COMP., RR. FRAME	I12	100	4
BODY SET, FRAME	I12	100	1
BOLT-WASHER, 4X16	H3	75	14
BOLT-WASHER, 6X12	J2	106	9
BOLT-WASHER, 6X14	I13	101	25
BOLT-WASHER, 6X20	D11	33	21
BOLT ASSY., FR. FORK	G10	66	15
BOLT A, PIN	G13	69	8
BOLT COMP., CENTER	G10	66	13
BOLT SET, ADJUSTING	G6	62	14
BOLT, 10X24	H16	88	7
BOLT, COVER	E15	53	18
BOLT, CUSHION LOWER, 10X43.5	I5	93	42
BOLT, CUSHION UPPER, 10X53	I5	93	41
BOLT, DISK, 6X19	G15	71	16
	H5	77	20
BOLT, ELEMENT SETTING	H11	83	18
BOLT, FLANGE SOCKET, 6X14	E8	46	20
	E11	49	22
BOLT, FLANGE, 10X117	I12	100	13
BOLT, FLANGE, 10X138	I12	100	18
BOLT, FLANGE, 10X26	I13	101	19
BOLT, FLANGE, 10X58	I12	100	17
BOLT, FLANGE, 5X12	H7	79	21
	I12	100	15
BOLT, FLANGE, 5X16	D16	38	4
BOLT, FLANGE, 6MM	G11	67	27
BOLT, FLANGE, 6X10	D8	30	7
	D10	32	14
	G8	64	10
	H1	73	17
	H13	85	12
BOLT, FLANGE, 6X12	D1	23	7
	D7	29	19
	E5	43	30
			39
	G12	68	36
	I2	90	34
BOLT, FLANGE, 6X14	D3	25	24
	H9	81	24
	H10	82	12
BOLT, FLANGE, 6X16	D8	30	8
	D14	36	10
	G1	57	11
	G7	63	8
BOLT, FLANGE, 6X16	G8	64	7
	G9	65	4
	H7	79	28
	H9	81	25
	H12	84	41
	I6	94	7
	I9	97	8
	I11	99	30
	I13	101	27
BOLT, FLANGE, 6X18	G5	61	32
	H7	79	29
BOLT, FLANGE, 6X20	D3	25	24
	D10	32	16
	G5	61	32
BOLT, FLANGE, 6X22	G5	61	33
	G6	62	21
	H14	86	16
BOLT, FLANGE, 6X23.5	I11	99	20
BOLT, FLANGE, 6X25	D8	30	9
BOLT, FLANGE, 6X28	D3	25	25
	D9	31	5
	D10	32	17
	D13	35	11
	E1	39	12
BOLT, FLANGE, 6X30	D15	37	26
	H7	79	30
	H9	81	26
BOLT, FLANGE, 6X32	D14	36	11
BOLT, FLANGE, 6X35	D10	32	18
BOLT, FLANGE, 6X40	D14	36	12
	E5	43	31
BOLT, FLANGE, 6X45	E5	43	32
	I2	90	35
BOLT, FLANGE, 6X50	I2	90	35
BOLT, FLANGE, 6X60	E5	43	33
BOLT, FLANGE, 6X70	E5	43	34
BOLT, FLANGE, 6X75	D14	36	13
	E5	43	35
BOLT, FLANGE, 6X85	D13	35	12
BOLT, FLANGE, 7X50	D2	24	12
BOLT, FLANGE, 7X60	D2	24	11
BOLT, FLANGE, 8X125	I12	100	14
BOLT, FLANGE, 8X16	H10	82	9
BOLT, FLANGE, 8X18	H13	85	14
BOLT, FLANGE, 8X24	H13	85	13
	H15	87	8
	H16	88	5
BOLT, FLANGE, 8X25	E5	43	36
BOLT, FLANGE, 8X32	I2	90	20
BOLT, FLANGE, 8X35	G7	63	10
	H13	85	15
BOLT, FLANGE, 8X40	G11	67	26
	G13	69	15
BOLT, FLANGE, 8X45	G7	63	9
	G8	64	8
BOLT, FLANGE, 8X55	I12	100	16
BOLT, FLANGE, 8X70	E5	43	37
BOLT, FR. DISK COVER	G15	71	17
	H3	75	11

5

PART NAME INDEX

L 2

Part name	Address	Page	Ref.
BOLT, HANDLE LEVER PIVOT	G4	60	24
	G6	62	15
BOLT, HEAD COVER	D1	23	5
BOLT, HEX., 6X16	E7	45	5
	E12	50	27
	E13	51	13
BOLT, HEX., 8X47.5	I2	90	18
BOLT, KICK ARM	H14	86	10
BOLT, KICK JOINT	H14	86	4
BOLT, LINK, 12X120	I5	93	40
BOLT, LINK, 12X81.5	I5	93	39
BOLT, LINK, 12X82	I5	93	57
BOLT, LINK, 12X92	I5	93	38
BOLT, LINK, 12X96	I5	93	38
BOLT, OIL, 10X22	G6	62	16
	H3	75	12
BOLT, PIN	G16	72	5
BOLT, PLUG	G11	67	18
BOLT, PROTECTOR	G11	67	28
BOLT, RECESSED, 5X28	D2	24	13
BOLT, RECESSED, 6X10	D10	32	14
BOLT, SEALING, 16MM	I10	98	1
BOLT, SETTING	E1	39	5
BOLT, SIDE STAND PIVOT	H16	88	6
BOLT, SOCKET, 5X9	I8	96	9
BOLT, SOCKET, 8X28	E2	40	16
BOLT, SPECIAL, 12X28	E2	40	10
BOLT, SPECIAL, 5X9	H8	80	19
BOLT, SPECIAL, 6MM	H13	85	16
BOLT, SPECIAL, 8MM	H10	82	13
BOLT, STATOR COVER SETTING	H8	80	18
BOLT, STEP, 12MM	H15	87	9
BOLT, STOPPER	E15	53	19
BOLT, STUD, 10X135	E4	42	14
BOLT, STUD, 8X22	D3	25	22
BOLT, UBS, 8X33	E9	47	21
BOLT, WIRE ADJUSTING	G4	60	23
BOOT B	G13	69	10
	H1	73	16
BOOT COMP.	G6	62	2
	H2	74	3
BOOT, PIN BUSH	G13	69	9
	H1	73	15
BOX ASSY., SPEEDOMETER GEAR	G15	71	13
BRACKET SUB ASSY., L. FR. CALIPER	G13	69	12
BRACKET SUB ASSY., RR.	G16	72	7
BRACKET, L. HANDLE LEVER	G4	60	16
BRACKET, L. HEAD HANGER	I12	100	11
BRACKET, L. STEP	H15	87	3
BRACKET, R. HEAD HANGER	I12	100	10
BRACKET, R. STEP	H15	87	2
BRACKET, SIDE STAND	H16	88	1
BRIDGE COMP., FORK TOP	G7	63	6
BULB, HEADLIGHT	G1	57	8
BUSH B, SLIDER	G10	66	11
BUSH C, SLIDER	G10	66	17
BUSH, GUIDE	G10	66	7
BUSH, SLIDER	G10	66	8

[C]

Part name	Address	Page	Ref.
CABLE ASSY., SPEEDOMETER	G2	58	2
CABLE ASSY., THROTTLE	G5	61	34
CABLE COMP. A, THROTTLE	G3	59	1
CABLE COMP. B, THROTTLE	G3	59	3
CABLE COMP., CLUTCH	G3	59	5
CABLE COMP., HOT STARTER	G3	59	4
CABLE, BATTERY EARTH	I8	96	7
CABLE, INNER	G2	58	3
CABLE, STARTER MAGNETIC BATTERY	I8	96	3
CABLE, STARTER MOTOR	I8	96	4
CALIPER SUB ASSY., L. FR. BRAKE	G13	69	11
CALIPER SUB ASSY., RR. BRAKE	G16	72	6
CAMSHAFT COMP.	D4	26	2
CAP ASSY., FUEL TANK	H6	78	12
	H8	80	11
CAP ASSY., NOISE SUPPRESSOR	I9	97	3
CAP ASSY., RESERVE TANK	I11	99	15
CAP COMP., CHAMBER	I4	92	23
CAP COMP., RADIATOR	I10	98	5
CAP, 14MM	D2	24	14
	D14	36	14
CAP, 30MM	D10	32	7
CAP, AIR VALVE	I3	91	9
CAP, BLEEDER	G13	69	3
	H1	73	12
CAP, MASTER CYLINDER	G6	62	4
	H2	74	4
CAP, OIL FILLER	D10	32	6
CAP, RESERVE TANK	I11	99	13
CAP, RIM HOLE	H5	77	16
CAP, VALVE	G14	70	2
	H5	77	14
CARBURETOR ASSY.	E15	53	21
CASE COMP., AIR CLEANER	H11	83	16
CASE COMP., DAMPER	I3	91	8
CASE COMP., ROD GUIDE	I3	91	13
	I4	92	13
CENTER, CLUTCH	D11	33	3
CENTER, GEARSHIFT DRUM	E11	49	7
CHAIN SET, DRIVE	I1	89	1
CHAIN, CAM	D8	30	1
CHAMBER SET, FLOAT	E14	52	5
	E16	54	46
CIRCLIP	G6	62	18
	H2	74	9
	H3	75	9
CIRCLIP, EXTERNAL, 12MM	E2	40	15
CIRCLIP, EXTERNAL, 14MM	E12	50	28
CIRCLIP, EXTERNAL, 16MM	E13	51	14
CIRCLIP, EXTERNAL, 17MM	E13	51	12
CIRCLIP, INTERNAL, 14MM	D15	37	25
CIRCLIP, SPECIAL INTERNAL, 24MM	D14	36	16
CIRCLIP, SPECIAL, 33MM	E4	42	17
CLAMP	I7	95	2

Part name	Address	Page	Ref.
CLAMPER A, FR. BRAKE HOSE	G10	66	1
	G12	68	37
CLAMPER B, FR. BRAKE HOSE	G10	66	2
	G12	68	39
CLAMPER, CORD	D16	38	2
CLAMP B, WATER HOSE	I11	99	18
CLAMP, HOSE	H11	83	4
CLAMP, MASTER CYLINDER OIL HOSE	H12	84	27
CLAMP, TUBE	H8	80	22
CLIP	E16	54	47
CLIP A, BREATHER TUBE	H11	83	19
CLIP, 2X60	D14	36	22
CLIP, 2X70	H12	84	33
CLIP, BREATHER TUBE	H11	83	20
CLIP, FUEL TUBE	I12	100	3
CLIP, GRILLE	I11	99	24
CLIP, OIL DRAIN TUBE	H11	83	1
			2
CLIP, PISTON PIN, 10MM	D11	33	1
CLIP, PISTON PIN, 16MM	E6	44	5
CLIP, TUBE	E5	43	29
	E15	53	39
	H7	79	27
	H12	84	39
	I11	99	28
			29
CLIP, WIRE	I11	99	26
CLIP, WIRE, 2X40	J2	106	11
CLUTCH, ONE WAY	E2	40	6
COCK ASSY., FUEL	H6	78	1
	H8	80	1
COLLAR	H7	79	20
COLLAR A	H7	79	23
	H8	80	21
	H10	82	11
COLLAR A, CONNECTING ROD	I4	92	30
COLLAR B, CUSHION	I4	92	28
COLLAR C, CUSHION ARM	I4	92	26
COLLAR D, CUSHION	I4	92	25
COLLAR D, CUSHION ARM	I4	92	25
COLLAR D, CUSHION ARM SIDE	I4	92	27
COLLAR D, CUSHION SIDE	I4	92	27
COLLAR, 17MM	E8	46	5
COLLAR, 20MM	E8	46	15
COLLAR, 24MM	E8	46	8
COLLAR, 6X4	I12	100	12
COLLAR, AIR CLEANER	H12	84	32
COLLAR, CHAIN GUIDE	I1	89	10
COLLAR, CHAIN TENSIONER	I1	89	12
COLLAR, CLUTCH OUTER	D11	33	13
COLLAR, COUNTERSHAFT	E8	46	3
COLLAR, COUNTERSHAFT THIRD GEAR	E8	46	11
COLLAR, DRIVE SPROCKET	E8	46	19
COLLAR, FR. DISTANCE	G14	70	5
COLLAR, FR. FENDER	G9	65	3
COLLAR, GEARSHIFT LEVER SETTING	I11	99	23

5

PART NAME INDEX

L 3

Part name	Address	Page	Ref.
COLLAR, KICK SPINDLE	E13	51	9
COLLAR, LINK SIDE	I4	92	31
COLLAR, L. FR. WHEEL	G14	70	4
COLLAR, L. RR. AXLE	H4	76	6
COLLAR, MAINSHAFT FOURTH GEAR	E8	46	13
COLLAR, PIVOT	G4	60	25
COLLAR, RADIATOR MOUNTING	I10	98	7
COLLAR, REBOUND NEEDLE	G10	66	12
COLLAR, RR. FENDER	I6	94	5
COLLAR, RR. WHEEL DISTANCE	H4	76	9
COLLAR, RR. WHEEL SIDE	H4	76	8
COLLAR, R. RR. AXLE	H4	76	7
COLLAR, SEAT FR.	H6	78	10
	H8	80	9
COLLAR, SHIFTER	E11	49	10
COLLAR, SHROUD UPPER	H7	79	24
COLLAR, SWINGARM PIVOT	I1	89	6
COLLAR, SWINGARM PIVOT SIDE	I1	89	8
COLLAR, SWINGARM, 49MM	I1	89	5
COLLAR, TANK SETTING	H6	78	5
	H8	80	5
COLLAR, TENSIONER, 6X9	D8	30	3
COLLAR, TOOL BOX SETTING	H10	82	3
COLLAR, WATER PASS, 16MM	D10	32	1
COLLAR, WATER PUMP GEAR	E7	45	4
COTTER, VALVE	D4	26	15
COUNTERSHAFT	E8	46	2
COVER ASSY., AIR CLEANER	H11	83	5
COVER COMP., CYLINDER HEAD	D1	23	2
COVER COMP., DRIVE SPROCKET	D14	36	8
COVER COMP., L. CRANKCASE	D14	36	2
COVER, BATTERY TERMINAL	I8	96	2
			6
COVER, CLUTCH	D10	32	3
COVER, FR. DISK	G15	71	15
COVER, L. HANDLE LEVER	G4	60	19
COVER, L. SIDE	H10	82	8
COVER, OIL FILTER	D14	36	1
COVER, RR. DISK	G16	72	9
COVER, R. CRANKCASE	D10	32	2
COVER, R. HANDLE LEVER	G6	62	13
COVER, R. SIDE	H10	82	4
	H11	83	13
COVER, STARTER MOTOR TERMINAL	I8	96	5
COVER, THROTTLE	E15	53	23
COVER, THROTTLE CABLE	G3	59	2
COVER, WATER PUMP	D13	35	2
CRANKCASE COMP., L.	E3	41	6
CRANKCASE COMP., R.	E3	41	1
CRANKCASE SET, L.	E5	43	41
CRANKSHAFT COMP.	E6	44	1
CUSHION ASSY., RR.	I3	91	1
CUSHION, C.D.I. UNIT	I9	97	1
CUSHION, HANDLE PIPE	G7	63	5
CYLINDER	D9	31	2
CYLINDER ASSY., RR. BRAKE MASTER	H2	74	2
CYLINDER SUB ASSY., FR. BRAKE MASTER	G6	62	3
C.D.I. UNIT	I9	97	2
[D]			
DAMPER COMP., FR.	G10	66	10
DAMPER COMP., RR.	I3	91	3
DIAL, CLUTCH CABLE ADJUSTING	G4	60	21
DIAPHRAGM	G6	62	7
	H2	74	7
DIAPHRAGM SET, PUMP	E14	52	9
DISK A, CLUTCH FRICTION	D11	33	5
DISK B, CLUTCH FRICTION	D11	33	6
DISK, FR. BRAKE	G15	71	14
			26
DISK, RR. BRAKE	H5	77	17
			32
DOWEL PIN, 10X16	D15	37	24
DOWEL PIN, 12X20	D3	25	23
	D9	31	4
DOWEL PIN, 14X20	E5	43	28
DOWEL PIN, 8X10	D13	35	10
DOWEL PIN, 8X14	D10	32	15
	D14	36	23
	E2	40	14
DOWEL PIN, 8X7	D13	35	10
DOWEL PIN, 9X14	D3	25	19
D-RING, 22MM	E10	48	37
	F2	56	2
DRUM, GEARSHIFT	E11	49	6
DUST SEAL	G11	67	29
DUST SEAL, 15X20X2.5	H14	86	13
DUST SEAL, 16X26X3	I5	93	55
DUST SEAL, 17X20X2.5	H14	86	9
DUST SEAL, 17X26X3	I5	93	54
DUST SEAL, 17.5X26X3	I5	93	54
DUST SEAL, 22X29X4	I2	90	30
DUST SEAL, 25X32X4	I5	93	52
DUST SEAL, 30X37X4	I2	90	29
DUST SEAL, 32X43X7	H5	77	29
DUST SEAL, 46X58X7	G15	71	22
DUST SEAL, RR. CUSHION PIVOT	I5	93	53
DUST SEAL, STEERING HEAD	G8	64	3
			4
[E]			
ELEMENT, AIR CLEANER	H11	83	7
EMBLEM, PRODUCT	G7	63	7
E-RING, 3MM	H12	84	38
[F]			
FAN COMP., COOLING	J2	106	2
FAN SET, COOLING	J2	106	1
			12
FENDER SET, RR.	I6	94	4
FENDER SUB ASSY., FR.	G9	65	1
FILTER COMP., ENGINE OIL	D14	36	5
FLAP, TIRE	G14	70	11
FLAP, TIRE	H5	77	19
FLOAT SET	E14	52	3
FORK C, GEARSHIFT	E11	49	3
FORK SUB ASSY., L. FR.	G11	67	23
FORK SUB ASSY., R. FR.	G11	67	20
FORK, L. GEARSHIFT	E11	49	2
FORK, R. GEARSHIFT	E11	49	1
FUSE, BLADE	I8	96	12
	I9	97	9
[G]			
GASKET SET	E14	52	1
	E16	54	45
GASKET SHEET KIT A	F1	55	1
GASKET SHEET KIT B	F2	56	1
GASKET, CLUTCH COVER	D10	32	4
	F2	56	1
GASKET, CRANKCASE	E3	41	5
	F2	56	1
GASKET, CYLINDER	D9	31	3
	F1	55	1
GASKET, CYLINDER HEAD	D2	24	4
	F1	55	1
GASKET, EX. MUFFLER	H13	85	1
GASKET, EX. PIPE	F1	55	1
	H13	85	2
GASKET, FLOAT CHAMBER	E15	53	24
GASKET, HEAD COVER	D1	23	4
	F1	55	1
GASKET, L. COVER	D14	36	3
	F2	56	1
GASKET, R. COVER	D10	32	5
	F2	56	1
GASKET, TENSIONER LIFTER	D8	30	5
	F1	55	1
GASKET, WATER PUMP	D13	35	3
	F2	56	1
GAUGE, AIR PRESSURE	I14	102	5
GAUGE, OIL LEVEL	D14	36	7
GEAR COMP., STARTER IDLE	E13	51	3
GEAR COMP., STARTING DRIVEN	E2	40	3
GEAR COMP., WATER PUMP	D13	35	4
GEAR, BALANCER DRIVE	E2	40	1
GEAR, BALANCER DRIVEN	E7	45	2
GEAR, COUNTERSHAFT FIFTH	E8	46	17
GEAR, COUNTERSHAFT FOURTH	E8	46	14
GEAR, COUNTERSHAFT LOW	E8	46	4
GEAR, COUNTERSHAFT SECOND	E8	46	7
GEAR, COUNTERSHAFT THIRD	E8	46	10
GEAR, MAINSHAFT FIFTH	E8	46	16
GEAR, MAINSHAFT FOURTH	E8	46	12
GEAR, MAINSHAFT SECOND	E8	46	6
GEAR, MAINSHAFT THIRD	E8	46	9
GEAR, OIL PUMP DRIVEN	D12	34	2
GEAR, PRIMARY DRIVE	E2	40	2
GEAR, STARTING IDLE	E2	40	9
GEAR, STARTING REDUCTION	E2	40	8
GEAR, WATER PUMP DRIVE	E7	45	3

5

PART NAME INDEX

L 4

Part name	Address	Page	Ref.
GENERATOR ASSY., FLYWHEEL TYPE A.C.	D16	38	1
GRILLE, RADIATOR	I10	98	4
GRIP COMP., THROTTLE	G3	59	10
GRIP, L. HANDLE	G3	59	12
GRIP, R. HANDLE	G3	59	11
GROMMET, ENGINE COVER	G2	58	5
GROMMET, SIDE COVER	G1	57	10
	I7	95	4
GUARD, CONDENSER	J2	106	18
GUARD, L. ENGINE	I12	100	7
GUARD, RR. CALIPER	G16	72	10
	H1	73	10
GUARD, R. ENGINE	I12	100	8
GUIDE COMP., CLUTCH CABLE	D10	32	9
GUIDE COMP., TUBE	E4	42	18
GUIDE, CAM CHAIN	D8	30	6
GUIDE, CHAIN	I1	89	9
	I2	90	37
GUIDE, CLUTCH CABLE	I13	101	28
GUIDE, DRIVE CHAIN	D14	36	9
GUIDE, EX. VALVE	D2	24	3
GUIDE, FR. BRAKE HOSE	G7	63	1
	G8	64	2
GUIDE, IN. VALVE	D2	24	2
GUIDE, MAIN HARNESS	I11	99	19
GUIDE, RR. BRAKE HOSE	I1	89	3
GUIDE, SPEEDOMETER CABLE	G8	64	1
	G12	68	38
[H]			
HARNESS, WIRE	I9	97	5
HEADLIGHT UNIT COMP.	G1	57	7
HEAD ASSY., CYLINDER	D2	24	1
HEAT GUARD	H10	82	6
HOLDER B1, HANDLE PIPE UPPER	G7	63	15
HOLDER COMP., STARTER GEAR	E2	40	5
HOLDER SET, BRUSH	E1	39	6
HOLDER, HANDLE UNDER	G7	63	4
HOLDER, L. LEVER BRACKET	G4	60	18
HOLDER, MASTER CYLINDER	G6	62	5
HOLDER, NEEDLE JET	E15	53	25
HOSE A, WATER	I11	99	9
HOSE B, WATER	I11	99	10
HOSE COMP., FR. BRAKE	G6	62	1
HOSE D, WATER	I11	99	11
HOSE D, WATER UPPER	I11	99	32
HOSE, RR. BRAKE	H2	74	1
HOUSING, UNDER THROTTLE	G3	59	14
	G4	60	14
HOUSING, UPPER THROTTLE	G3	59	13
HUB SUB ASSY., FR.	G14	70	6
HUB SUB ASSY., RR.	H4	76	10
[I]			
IMPELLER, WATER PUMP	D13	35	1
INSULATOR, CARBURETOR	D2	24	5
[J]			
JET COMP., PISTON,	E5	43	38
JET, BY-STARTER,	E16	54	44
JET, LEAK,	E16	54	43
JET, MAIN,	E16	54	40
JET, OIL,	E4	42	19
JET, SLOW AIR,	E16	54	42
JET, SLOW,	E16	54	41
JOINT ASSY., FUEL	H6	78	3
	H8	80	3
JOINT SET, FUEL	E15	53	15
JOINT, BRAKE ROD	H3	75	10
JOINT, BREATHER TUBE	H12	84	22
JOINT, DRIVE CHAIN	I1	89	2
JOINT, FUEL TUBE	H11	83	3
JOINT, KICK ARM	H14	86	3
JOINT, THREE WAY	E3	41	9
JOINT, WATER	D2	24	9
[K]			
KEY, SPECIAL WOODRUFF, 25X14	E6	44	6
[L]			
LABEL, DRIVE CHAIN	I15	103	1
LABEL, RR. DAMPER WARNING	I5	93	36
			37
LABEL, TRANSMISSION DRAIN	I15	103	3
LEATHER COMP., SEAT	H10	82	2
LEVER COMP., CLUTCH LIFTER	E3	41	11
LEVER SET, PUMP	E15	53	13
LEVER SET, R. HANDLE	G6	62	11
LEVER, HOT STARTER	G4	60	22
LEVER, L. STEERING HANDLE	G4	60	20
LIFTER ASSY., TENSIONER	D8	30	4
LIFTER, VALVE	D4	26	10
LOCK, PURSE	D16	38	3
	G3	59	6
[M]			
MARK	I16	104	3
	J1	105	3
			4
MARK, CAUTION	I15	103	2
MARK, L. RADIATOR SHROUD	I16	104	2
			5
			7
			9
	J1	105	2
MARK, R. RADIATOR SHROUD	I16	104	1
			4
			6
			8
	J1	105	1
METER ASSY., TRIP	G2	58	1
MOTOR ASSY., STARTING	E1	39	2
MOTOR, COOLING FAN	J2	106	5
MUDGUARD, AIR CLEANER CASE	H11	83	10
MUFFLER COMP.	H13	85	3
[N]			
NEEDLE SET, JET	E15	53	36
NUT-WASHER, 6MM	E1	39	8
NUT, 18MM	D11	33	14
NUT, ADJUSTER	I3	91	7
NUT, BEAM ADJUSTING	G1	57	5
NUT, CAP, 5MM	G2	58	6
NUT, CAP, 9MM	D2	24	15
NUT, CLIP, 6MM	H12	84	31
	I11	99	21
NUT, FLANGE, 10MM	I13	101	20
NUT, FLANGE, 12MM	D16	38	7
NUT, FLANGE, 6MM	G6	62	20
	I11	99	27
NUT, FLANGE, 8MM	H13	85	18
	I13	101	26
NUT, FR. AXLE	G15	71	18
NUT, HEX., 12MM	I4	92	19
NUT, HEX., 14MM	E7	45	6
NUT, HEX., 5MM	H12	84	37
NUT, HEX., 6MM	G4	60	30
	H3	75	15
NUT, HEX., 8MM	G15	71	24
	H5	77	30
	I2	90	24
NUT, LOCK	G10	66	16
NUT, SETTING	J2	106	3
NUT, SPECIAL, 6X7	I6	94	2
NUT, SPEED, 3MM	H10	82	10
NUT, SPRING, 6MM	H13	85	10
NUT, SQUARE, 5MM	D2	24	8
NUT, STEERING STEM	G7	63	11
NUT, TOOTHED, 3MM	J2	106	7
NUT, U, 10MM	G7	63	12
	H16	88	8
	I5	93	44
NUT, U, 12MM	I5	93	43
NUT, U, 22MM	H5	77	23
NUT, U, 6MM	G5	61	30
	G15	71	19
	H5	77	22
	I2	90	21
			23
NUT, U, 8MM	H5	77	24
	I2	90	23
NUT, U, HEX. 14MM	I2	90	22
[O]			
OIL SEAL SET	I4	92	18
OIL SEAL, 10X21X5	D14	36	18
OIL SEAL, 12X18X3	E5	43	27
OIL SEAL, 12X22X5	D13	35	8
OIL SEAL, 14X22X5	E4	42	25

5

PART NAME INDEX

L 5

Part name	Address	Page	Ref.
OIL SEAL, 16.5X25X5	D10	32	10
OIL SEAL, 20X33X5	E4	42	26
OIL SEAL, 26X37X7	G15	71	21
OIL SEAL, 28X37X7	E10	48	36
OIL SEAL, 38X52X7	E4	42	23
OIL SEAL, 39X56X7	E4	42	24
OIL SEAL, 39X56X7.5	E4	42	24
ORIFICE,	E4	42	19
O-RING	E1	39	10
			11
O-RING, 11.8X3.55	H6	78	4
	H8	80	4
O-RING, 11.9X2.2	D10	32	13
	F2	56	2
O-RING, 13.5X1.4	I11	99	25
	J2	106	8
O-RING, 13.8X2.5	D3	25	20
	D14	36	20
	F1	55	2
	F2	56	2
O-RING, 15.8X2.4	D10	32	11
	F2	56	2
O-RING, 18X3	D14	36	21
	F2	56	2
O-RING, 18.8X1.9	G11	67	32
O-RING, 19X3	D3	25	21
	F2	56	2
O-RING, 1.3X4.3	E16	54	48
O-RING, 21.5X1.5	I5	93	50
O-RING, 24.4X3.1	E1	39	9
O-RING, 26.2X1.9	I5	93	51
O-RING, 26.7X3.5	G11	67	30
O-RING, 27X2	D10	32	12
	F2	56	2
O-RING, 27.7X1.9	G11	67	31
O-RING, 37.2X2.4	G12	68	35
O-RING, 39.8X2.2	D14	36	19
	F2	56	2
O-RING, 3.5X1.5	G12	68	33
O-RING, 3.5X43.7	I4	92	15
O-RING, 42.5X2.0	I4	92	16
O-RING, 44.7X2.4	G12	68	34
O-RING, 5.5X1.4	G15	71	23
O-RING, 8.5X1.7	D14	36	17
	F2	56	2
OUTER COMP., CLUTCH	D11	33	2
OUTER, STARTING CLUTCH	E2	40	4
[P]			
PACKING, FUEL CAP	H6	78	13
	H8	80	12
PACKING, MUFFLER	H13	85	9
PACKING, RESERVE TANK	I11	99	16
PAD SET, FR.	G13	69	4
PAD SET, RR.	G16	72	1
PAWL A, RATCHET	E11	49	11
PAWL B, RATCHET	E11	49	12
PEDAL COMP., CHANGE	H14	86	1
PEDAL, RR. BRAKE	H14	86	6
PIECE, CLUTCH LIFTER	D11	33	9
PINION COMP., KICK STARTER	E13	51	2
PIN D, JOINT	H14	86	15
PIN, BRAKE LOCK LEVER PIVOT	H12	84	28
PIN, GEARSHIFT RETURN SPRING	E11	49	20
PIN, HANGER	G13	69	14
	G16	72	8
PIN, PISTON	E6	44	4
PIN, SHIFTER	E11	49	8
PIN, SNAP, 8MM	H14	86	12
PIN, SPLIT, 2.0X12	H14	86	14
PIN, SPLIT, 2.5X15	H15	87	11
PIN, STEP JOINT	H15	87	1
PIN, VISOR HINGE	H12	84	29
PIPE COMP., EX.	H13	85	4
PIPE COMP., L. SLIDE	G11	67	22
PIPE COMP., R. SLIDE	G10	66	9
PIPE, CP	G1	57	4
PIPE, STEERING HANDLE	G7	63	2
PIPE, WATER	D2	24	9
PISTON	E6	44	3
	G13	69	5
	H1	73	13
PISTON SET, MASTER CYLINDER	G6	62	10
	H2	74	5
PIVOT, SHIFT DRUM STOPPER ARM	E11	49	21
PLATE	H10	82	5
PLATE, AIR CLEANER CASE FR.	H11	83	9
PLATE, BEARING HOLDER	E4	42	15
	E7	45	8
	E9	47	23
	E12	50	24
PLATE, BREATHER	D1	23	3
PLATE, BUFFER	E15	53	31
PLATE, CAM CHAIN GUIDE	E3	41	7
PLATE, CHAIN GUIDE	I1	89	11
	I2	90	36
PLATE, CLUTCH	D11	33	7
PLATE, CLUTCH LEVER	E3	41	12
PLATE, CLUTCH PRESSURE	D11	33	8
PLATE, CLUTCH SWITCH	G4	60	17
PLATE, COUNTERSHAFT BEARING	E9	47	35
PLATE, DIAPHRAGM	H2	74	6
PLATE, END	I3	91	12
PLATE, GUIDE	E11	49	14
PLATE, OIL GUIDE	E13	51	1
PLATE, RATCHET SLIDER	E13	51	8
PLATE, SPRING	H12	84	30
PLATE, WEIGHT SETTING	D4	26	4
PLUG, BREATHER TUBE	H12	84	23
PLUG, PIN	G13	69	13
PLUG, SPARK	D2	24	10
PLUNGER, PAWL	E11	49	13
PROTECTOR COMP., R. FR. FORK	G11	67	25
PROTECTOR, EX. PIPE	H13	85	5
PROTECTOR, HANDLE	G7	63	3
PROTECTOR, L. FR. FORK	G11	67	24
PROTECTOR, MUFFLER	H13	85	6
PROTECTOR, R. FR. FORK	G11	67	25
[R]			
RADIATOR, L.	I10	98	3
RADIATOR, R.	I10	98	2
RATCHET, STARTER	E13	51	4
RECEIVER, CLUTCH CABLE	E1	39	1
RECTIFIER ASSY., SILICON	J2	106	13
RECTIFIER COMP., REGULATOR	I9	97	4
RELAY COMP., STARTER	I9	97	6
	J2	106	16
RETAINER	G13	69	7
RETAINER, BRACKET	G16	72	4
RETAINER, RR. WHEEL BEARING	H4	76	4
RETAINER, VALVE SPRING	D4	26	13
RIM, FR. WHEEL	G14	70	8
RIM, RR. WHEEL	H4	76	12
RING	E1	39	7
	G6	62	8
			9
RING SET, PISTON	E6	44	2
RING, BACK UP	G10	66	6
RING, FRICTION	E2	40	7
RING, OIL SEAL STOPPER	G10	66	14
RING, PISTON	I4	92	14
RING, STOPPER	H1	73	14
	I4	92	17
			22
			24
	I5	93	35
RING, WEAR	G11	67	19
ROD COMP.	I3	91	10
ROD COMP., PISTON	I3	91	5
ROD COMP., PUSH	H2	74	8
ROD SUB ASSY., CUSHION CONNECTING	I5	93	33
ROD, CLUTCH LIFTER	D11	33	12
ROLLER	E15	53	26
ROLLER COMP., CHAIN LOWER	I1	89	16
ROLLER, 3X17.8	D12	34	5
ROLLER, 4X8	E12	50	29
ROLLER, CHAIN	I1	89	15
ROTOR, OIL PUMP INNER	D12	34	3
ROTOR, OIL PUMP OUTER	D12	34	4
RUBBER, BATTERY	I6	94	1
	I12	100	5
RUBBER, FUEL TANK MOUNTING	H6	78	7
	H8	80	7
RUBBER, LIGHT FOAM	G1	57	15
RUBBER, MOUNTING	D1	23	6
	F1	55	2
RUBBER, PROTECTOR PACKING	G1	57	1
RUBBER, RADIATOR MOUNTING	I10	98	6
RUBBER, SEAT RAIL	I12	100	6
			9
RUBBER, SIDE COVER	H13	85	11
RUBBER, SIDE COVER STOPPER	H10	82	7
RUBBER, SILENCER	H6	78	17

PART NAME INDEX

L 6

Part name	Address	Page	Ref.
RUBBER, SILENCER	H8	80	15
RUBBER, STOPPER	I3	91	11
RUBBER, TANK GUARD	I12	100	6
[S]			
SCREEN SET, FUEL STRAINER	H6	78	2
	H8	80	2
SCREEN, OIL FILTER	E3	41	8
SCREW-WASHER, 4X14	E15	53	38
SCREW-WASHER, 4X24	D16	38	5
SCREW-WASHER, 4X8	E15	53	37
	J2	106	10
SCREW SET A	E14	52	6
SCREW SET B	E14	52	10
SCREW SET, JET NEEDLE	E14	52	11
SCREW, 5X12	H8	80	20
SCREW, BLEEDER	G13	69	2
	H1	73	11
SCREW, FLAT, 4X12	G6	62	19
SCREW, FLAT, 6X10	E10	48	38
SCREW, FLAT, 8X31	H5	77	21
SCREW, PAN	E15	53	20
SCREW, PAN, 4X12	G4	60	27
SCREW, PAN, 4X14	G4	60	28
SCREW, PAN, 4X55	G1	57	2
SCREW, PAN, 5X10	G4	60	29
SCREW, PAN, 5X13	H7	79	25
SCREW, PAN, 5X8	I2	90	19
			31
			32
SCREW, SPECIAL FLAT, 6X12	E3	41	13
SCREW, SPECIAL FLAT, 6X17	E3	41	13
SCREW, SPECIAL, 5MM	H7	79	22
SCREW, SPECIAL, 5X9.5	I7	95	6
SCREW, TAPPING, 4X10	G12	68	40
SCREW, TAPPING, 4X12	H12	84	34
SCREW, TAPPING, 4X8	I7	95	5
SCREW, TAPPING, 5X10	G1	57	13
SCREW, TAPPING, 5X16	H12	84	35
			36
SEAL SET, FR. FORK	G11	67	21
SEAL SET, PISTON	G13	69	1
	G16	72	2
SEAL, AIR CLEANER CASE	H11	83	11
SEAL, AIR CLEANER COVER	H11	83	12
SEAL, RADIATOR CAP	I10	98	8
	I11	99	8
SEAL, RING	D1	23	1
	F1	55	2
SEAL, VALVE STEM	D4	26	1
SEAL, WATER PUMP	D13	35	9
SEAT COMP.	H10	82	1
SEAT, JUDDER SPRING	D11	33	4
SEAT, SPRING	I5	93	34
SEAT, VALVE SPRING	D4	26	14
SENSOR ASSY., THROTTLE	E15	53	17
SEPARATOR COMP.	G6	62	6
SET RING, 20MM	E9	47	30
SET RING, 22MM	E9	47	31
SHAFT A, SHIFT FORK	E11	49	4
SHAFT B, SHIFT FORK	E11	49	5
SHAFT COMP., BALANCER	E7	45	1
SHAFT COMP., MAIN	E8	46	1
SHAFT SET, THROTTLE	E14	52	12
	E15	53	12
SHAFT, BRAKE PIVOT	H14	86	8
SHAFT, EX. ROCKER ARM	D4	26	7
SHAFT, OIL PUMP	D12	34	1
SHAFT, SWINGARM PIVOT	I1	89	4
SHIFTER, DRUM	E11	49	9
SHIM, TAPPET	D4	26	16
	D5	27	16
	D6	28	16
			17
	D7	29	17
SHROUD COMP., FAN	J2	106	4
SHROUD SET, L. RADIATOR	H6	78	19
	H7	79	19
	H8	80	17
SHROUD SET, R. RADIATOR	H6	78	18
	H8	80	16
SLIDER, CHAIN	I1	89	13
SLIDER, THROTTLE CABLE	G4	60	15
SOCKET COMP., HEADLIGHT	G1	57	6
SPANNER A, PIN	I14	102	1
SPINDLE COMP., GEARSHIFT	E11	49	18
SPINDLE, KICK STARTER	E13	51	6
SPOKE SET, FR.	G14	70	1
SPOKE SET, RR.	H4	76	1
			2
SPRING ASSY., RR. BRAKE RETURN	H14	86	7
SPRING ASSY., SIDE STAND	H16	88	4
SPRING, BEAM ADJUSTING	G1	57	3
SPRING, BRAKE LEVER	G6	62	12
SPRING, CARBON BRUSH	E1	39	4
SPRING, CLUTCH	D11	33	10
SPRING, DECOMPRESSION	D4	26	5
SPRING, DRUM STOPPER	E11	49	17
SPRING, EX. VALVE	D4	26	12
SPRING, FR. FORK	G10	66	4
SPRING, GEARSHIFT RETURN	E11	49	19
SPRING, IN. VALVE	D4	26	11
SPRING, JUDDER	D11	33	11
SPRING, KICK STARTER	H14	86	5
SPRING, L. STEP RETURN	H15	87	6
SPRING, OIL FILTER	D14	36	6
SPRING, PAD	G13	69	6
	G16	72	3
SPRING, PAWL PLUNGER	E11	49	15
SPRING, RATCHET	E13	51	5
SPRING, RR. CUSHION	I3	91	2
SPRING, R. STEP RETURN	H15	87	5
SPRING, STARTER RETURN	E13	51	7
SPROCKET, DRIVE	E8	46	18
SPROCKET, FINAL DRIVEN	H4	76	3
STAND COMP., MAIN	H16	88	2
START SET, HOT	E14	52	8
STAY, AIR CLEANER ELEMENT	H11	83	6
STAY, CONDENSER	J2	106	19
STAY, COUPLER	G2	58	4
	I12	100	2
STAY, FR. TANK	H6	78	8
STAY, TAILLIGHT	I7	95	3
STEM SUB ASSY., STEERING	G8	64	5
STOPPER COMP., DRUM	E11	49	16
STOPPER, BEAD	G14	70	12
	H5	77	15
STOPPER, SPRING SEAT	I3	91	4
STRAP, CABLE, 118MM	D3	25	18
STUD, 6X21	H11	83	15
SUB HARNESS, OPTION FAN	J2	106	14
SUSPENSION, STARTER RELAY	I9	97	7
	J2	106	17
SWINGARM SUB ASSY., RR.	I1	89	17
SWITCH ASSY., ENGINE STOP	G3	59	7
SWITCH ASSY., FR. STOP	G3	59	9
SWITCH ASSY., STARTER	G3	59	8
SWITCH ASSY., STARTER MAGNETIC	I8	96	8
SWITCH ASSY., THERMO	J2	106	6
[T]			
TAILLIGHT UNIT	I7	95	1
TANK COMP., FUEL	H6	78	6
	H8	80	6
TANK, RADIATOR RESERVE	I11	99	17
TENSIONER COMP., CAM CHAIN	D8	30	2
TERMINAL SET, BRUSH	E1	39	3
THREAD, STEERING HEAD TOP	G8	64	6
TIRE, FR.	G14	70	9
TIRE, RR.	H4	76	13
	H5	77	13
TOOL, CARBURETOR MAINTENANCE	I14	102	4
TOP SET	E14	52	4
TUBE A, BREATHER	E3	41	2
	H12	84	24
TUBE A, FUEL	H8	80	14
TUBE A, FUEL MAIN	H6	78	15
TUBE A, FUEL RESERVE	H6	78	16
TUBE B, BREATHER	E3	41	3
	H12	84	25
TUBE B, FUEL	H6	78	14
	H8	80	13
TUBE COMP., AIR VENT	E15	53	34
			35
TUBE COMP., FUEL CAP BREATHER	H6	78	11
	H8	80	10
TUBE C, BREATHER	E3	41	4
	H12	84	26
TUBE, AIR CLEANER CONNECTING	H11	83	17
TUBE, AIR VENT	E15	53	33
TUBE, DRAIN	H11	83	21
TUBE, OUTER	G10	66	5
TUBE, OVERFLOW	E15	53	32
TUBE, RADIATOR BREATHER	I11	99	12
TUBE, RADIATOR DRAIN	I11	99	14

5

PART NAME INDEX

L 7

Part name	Address	Page	Ref.
TUBE, RESERVE TANK DRAIN	I11	99	14
TUBE, TIRE	G14	70	10
	H5	77	18
TY-RAP, CABLE	H7	79	26
	H8	80	23
[V]			
VALVE ASSY., RELIEF	D14	36	4
VALVE COMP., REED	E3	41	10
VALVE SET, FLOAT	E14	52	2
VALVE SET, FLOATING	E15	53	14
VALVE SET, STARTER	E15	53	16
VALVE, EX.	D4	26	9
VALVE, IN.	D4	26	8
VALVE, THROTTLE	E15	53	22
VISOR SET, FR.	G1	57	9
			14
[W]			
WASHER O-RING KIT A	F1	55	2
WASHER O-RING KIT B	F2	56	2
WASHER, 10MM	I13	101	21
WASHER, 12MM	D11	33	18
WASHER, 14MM	E7	45	7
	E12	50	25
	I2	90	25
WASHER, 16.8X24	E13	51	11
WASHER, 18X32X2	D11	33	17
WASHER, 22X32X1.5	E9	47	25
WASHER, 22X35X2	H5	77	25
WASHER, 24X32X1	E9	47	27
WASHER, 26X10.5	H14	86	11
WASHER, 26X9	H14	86	11
WASHER, 6MM	H13	85	17
WASHER, 6.1MM	E11	49	23
WASHER, 8MM	H5	77	26
WASHER, AIR CLEANER COVER SETTING	H11	83	14
WASHER, CAMSHAFT THRUST	D3	25	17
WASHER, CHAIN SLIDER	I1	89	14
WASHER, FENDER MOUNTING	G9	65	2
WASHER, FR. COVER SETTING	G1	57	12
WASHER, HEAD HANGER PLATE	I13	101	22
WASHER, LOCK, 18MM	D11	33	15
WASHER, OIL BOLT	G6	62	17
	H3	75	13
WASHER, PLAIN	E15	53	27
			28
WASHER, PLAIN, 10MM	G7	63	14
WASHER, PLAIN, 12MM	D16	38	6
	E2	40	11
	I5	93	45
			56
WASHER, PLAIN, 5MM	I2	90	33
WASHER, PLAIN, 6MM	I6	94	6
WASHER, PLAIN, 8MM	H13	85	19
			20
WASHER, PLAIN, 8MM	H15	87	10
WASHER, PLAIN, 9MM	D3	25	16
WASHER, RADIATOR MOUNTING	I11	99	22
WASHER, SEALING, 6MM	D8	30	10
	F1	55	2
WASHER, SEALING, 6.5MM	D10	32	8
	D13	35	6
	F2	56	2
WASHER, SEALING, 7MM	D13	35	5
	F2	56	2
WASHER, SEALING, 8MM	E4	42	16
	F2	56	2
WASHER, SEAT MOUNTING	I6	94	3
WASHER, SPECIAL, 6MM	D8	30	11
WASHER, SPLINE, 20MM	E9	47	28
WASHER, SPRING, 24MM	E9	47	29
WASHER, SPRING, 4MM	G5	61	31
WASHER, SPRING, 8MM	G15	71	25
	H5	77	31
WASHER, STEERING STEM	G7	63	13
WASHER, SWINGARM SIDE	I1	89	7
WASHER, THRUST	I5	93	32
WASHER, THRUST INVOLUTE, 22X21X1	E9	47	22
WASHER, THRUST, 12MM	E2	40	12
WASHER, THRUST, 13MM	D14	36	15
WASHER, THRUST, 17MM	E13	51	10
WASHER, THRUST, 17.2MM	E9	47	24
WASHER, THRUST, 20MM	D11	33	16
WASHER, THRUST, 22X30X1	E9	47	26
WEIGHT, DECOMPRESSION	D4	26	3
WHEEL SUB ASSY., FR.	G14	70	7
WHEEL SUB ASSY., RR.	H4	76	11
WIRE, SPEEDOMETER CABLE GUIDE	G10	66	3
WRENCH, NIPPLE	I14	102	2
WRENCH, PLUG	I14	102	3

5

1 FOREWORD INDEX

2 ENGINE GROUP

3 FRAME GROUP

4 PART NUMBER INDEX

5 PART NAME INDEX

HONDA

The Power of Dreams

E.O A 40.2007.08

Published by Honda Motor Co., Ltd.
Printed in Japan