150 Montauk

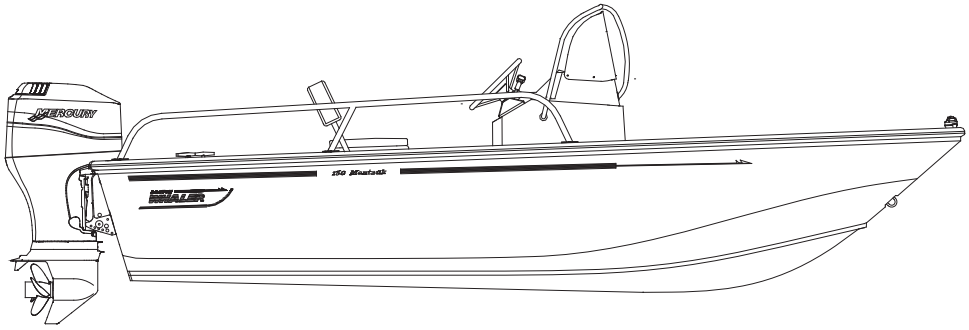

**"The mission of Boston Whaler®
is to provide consumers with the
safest, highest quality, most durable
boats in the world"**

Downloaded from www.Manualslib.com manuals search engine

Downloaded from www.Manualslib.com manuals search engine

Welcome to the Boston Whaler family! Congratulations on your purchase of a Boston Whaler boat.

For over 50 years now, Boston Whaler has been represented by a select group of the best dealers in the boating industry. Boston Whaler depends on this extremely qualified network of dealers to provide you, our customer, with a truly exceptional boating experience.

Should you have any questions or concerns regarding your boat, please don't hesitate to contact your selling dealer. They will be more than happy to provide you with all the information and assistance that you require.

Information and assistance is also available at our corporate website, www.whaler.com. At whaler.com you will find information about upcoming events happening in your area. Things like fishing tournaments, rendezvous, boat shows, and many others are listed, as are maintenance tips and back issues of our e-newsletter, the *Whaler News.*

Since Boston Whaler's inception in 1958, we have been committed to providing customers with the safest, highest quality, most durable boats in the world. I am confident that you, as a Whaler owner, will also appreciate the quality and pride that is built into every Boston Whaler boat.

From all of us here at Whaler, thank you for purchasing one of our boats. May it bring you many years of boating enjoyment.

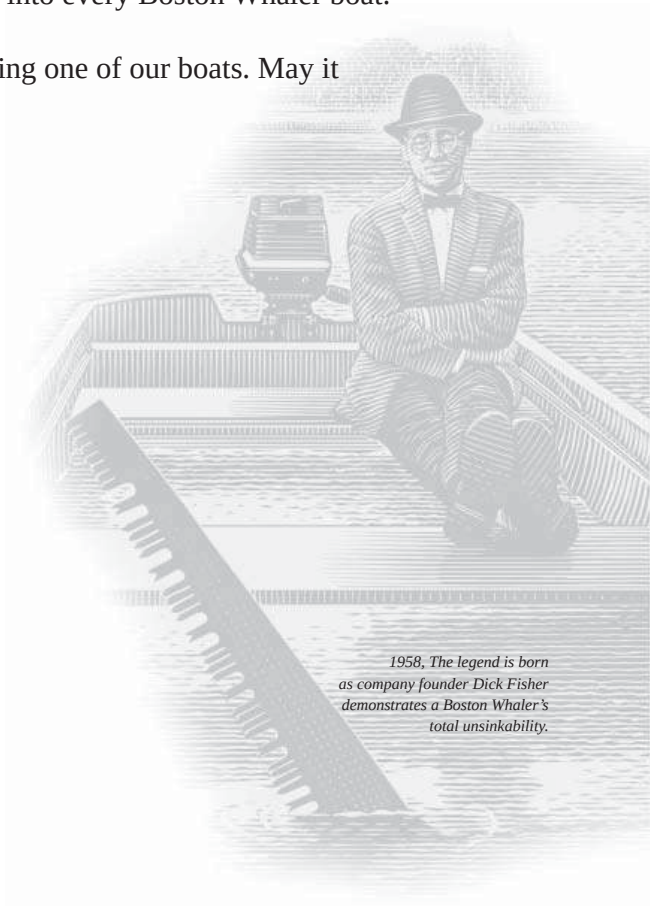

1958, The legend is born as company founder Dick Fisher demonstrates a Boston Whaler's total unsinkability.

Downloaded from www.Manualslib.com manuals search engine

In 1958, company founder Richard T. Fisher introduced the first Boston Whaler® boat in Braintree, Massachussetts. It featured two significant innovations: first, its twin sponson hull design produced superior stability and a remarkably dry ride; second, its unique foam core construction made the boat not only durable, but unsinkable as well.

Fisher took every opportunity to illustrate the unique characteristics of the Boston Whaler®. His most famous demonstration was captured in 1961, by *Life Magazine*. The series of photographs showed the boat underway, the boat being sawed in half and ultimately Fisher motoring away in the remaining half of the boat. And through the years many other demonstrations have proved the toughness and durability of the Boston Whaler hull. And though you may never cut your boat in half, this only goes to show one thing, people whose livelihood and lives depend on boats consistently choose Boston Whaler® because of their seaworthiness, dependablility and the inherent safety of a hull that won't sink even if severely damaged.

Boston Whalers are built to last. For over 50 years Boston Whaler® has strived to make each model better, providing you with a safe and fun boating experience. That is the reason we offer a 10 year limited transferable warranty. It is also an excellent reason why you can trust the safety of your family and friends to a Boston Whaler®.

On September 26, 1996, Richard T. Fisher was posthumously inducted into the NMMA (National Marine Manufacturer's Association) Hall of Fame for accomplishments made in marine engineering and construction.

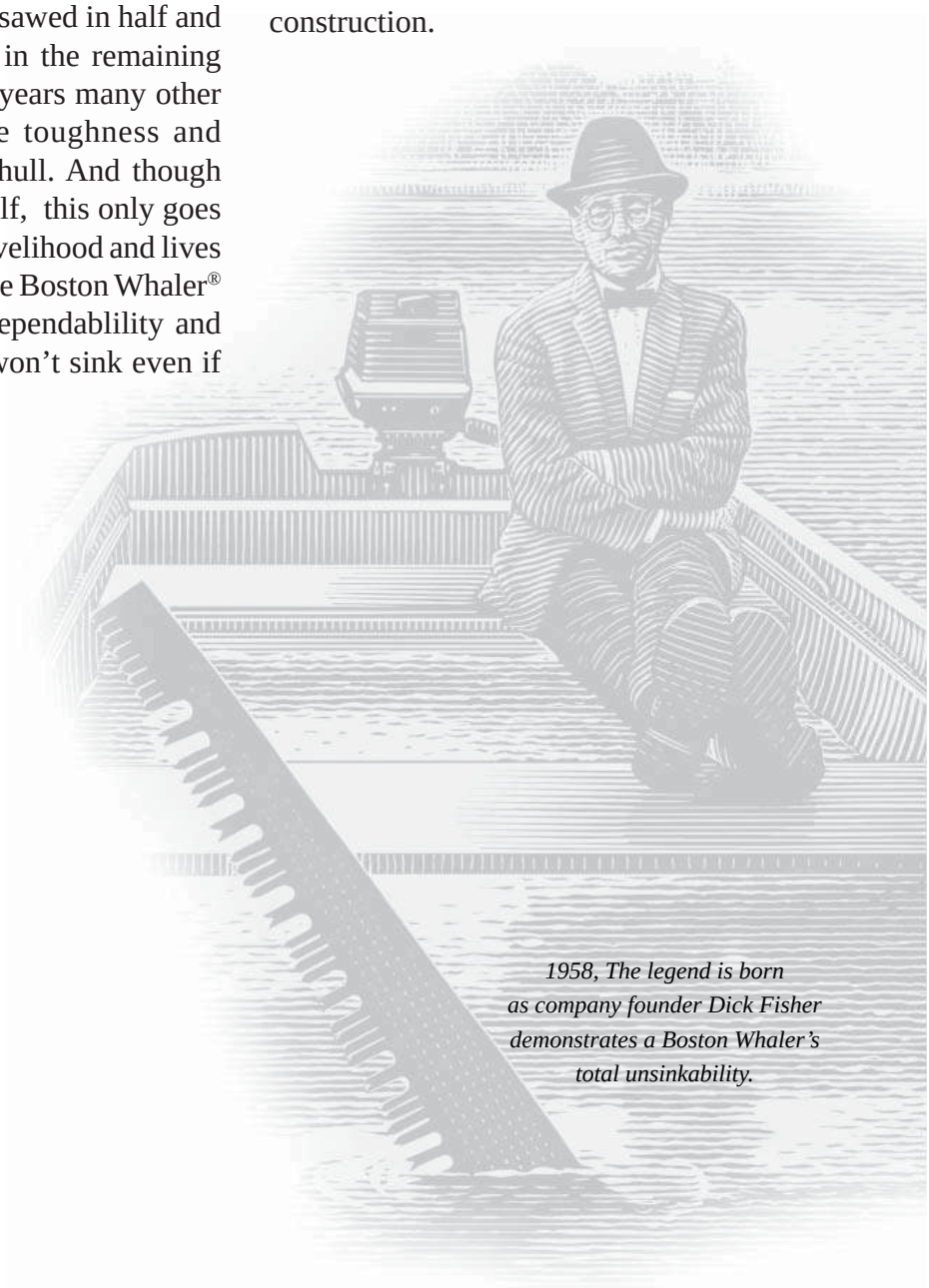

1958, The legend is born as company founder Dick Fisher demonstrates a Boston Whaler's total unsinkability.

PLEASE KEEP THIS OWNER'S MANUAL PACKET IN A SECURE PLACE, AND BE SURE TO HAND IT OVER TO THE NEW OWNER IF YOU SELL THE BOAT.

Downloaded from www.Manualslib.com manuals search engine

Welcome Letter iii
History iv
Preface vii
Boston Whaler Limited Warranty viii
Privacy Statement xi
Introduction xii
Owner's manual xii
Your responsibilites xii
Source of Information xii
Warranties xii
Contact Phone Numbers and Internet Addresses xii

Section 1 • Safety

Explanation of Safety Labels 1-1
Warning Labels 1-1
Safe Boating means 1-2
In Addition 1-2
Safe Boating Checklist 1-2
Before departure 1-2
Trailering (if applicable) 1-2
After Return 1-2
General Considerations 1-3
Maintain Control 1-3
Boarding 1-3
Impaired Operation 1-3
Legally Mandated Equipment (Minimum Required) 1-5
Personal Flotation devices (PFD's) 1-5
Fire Extinquisher (Portable) 1-5
Whistle, Horn 1-5
Visual Distress Signal 1-5
Additional recommended Equipment for Safe Operation 1-5
Carbon Monoxide (CO) 1-6
In The Event CO Alarm Activates 1-6
Lifesaving Equipment 1-7
PFD Requirement 1-7
PFD Classification 1-7
Emergency Situations 1-9
Medical Emergency 1-9
Water Rescue 1-9
Returning to the victim 1-9
Making contact 1-9
Getting back on board 1-9
Fire 1-9
To lessen the danger of fire 1-10
Flooding, Swamping and Capsizing 1-10
Flooding 1-10
Swamping 1-10
Capsizing 1-10
Collision 1-11
Propulsion, Control or Steering Failure 1-11
Grounding 1-11
Distress Signals 1-11
Visual distress signals (VDS) 1-11
Audible distress signals 1-12
Radio Communication 1-12
Weather 1-12
Swimming, Diving & Water Skiing 1-13
Swimming 1-13
Diving 1-13
Water Skiing 1-14
Water Skiing Signals 1-14
Emergency Engine Stop Switch 1-16
Float Plan 1-16
Chart Your Course 1-16
Environmental Considerations 1-17
Fuel & Oil Spillage 1-17
Excessive Noise 1-17
Wake/Wash 1-17
Homeland Security Restrictions 1-18
America's Waterway Watch 1-18
Warning Label Locations 1-18
Key To Symbols Used on Controls & Prints 1-20

Section 2 • General Information

Construction Standard 2-1
Our Hull 2-1
Hull Identification Number 2-1
Servicing Your Boston Whaler 2-1
Manufacturer's Certification 2-1
CE Certification design Category 2-3
Power Capacity 2-3
Specifications & Dimensions 2-4
Passenger Locations 2-5
Location Of Thru-Hull Fittings 2-6
Features 2-7
Control Station Switch Panel 2-8

Downloaded from www.Manualslib.com manuals search engine

Seating & Storage 2-8
Recommended Seating 2-9
Gear Shift & Throttle Control 2-10
Power Trim Operation 2-10
Navigation Lighting..... 2-11
Operating The navigation Lighting 2-11
Steering 2-12
Steering Pull 2-12
Trolling Motor Panel (Option) 2-13
Canvas (Option) 2-14
Propeller..... 2-15
Docking, Lifting and Trailering 2-16
Docking 2-16
Lifting..... 2-16
Trailering 2-17
Trailer safety 2-17
Securing the Boat to the Trailer 2-17
Securing the Trailer to the Tow Vehicle 2-17
Trailer Description 2-18

Section 3 • Systems & Components Overview & Operation

Bilge Pump 3-1
Maintenance 3-1
Fuel & Oil Spillage 3-1
Fuel System 3-2
Primer Bulb 3-3
Static Electricity and the Fuel System 3-3
Ethanol-Blended Fuels 3-4
Starting the Engine..... 3-5
Warming Up the Engine 3-6
Stopping the Engine 3-6
Livewell (Option) 3-7
Operation..... 3-7
Maintenance 3-7
Anchoring 3-8
Considerations..... 3-8
Lowering the Anchor..... 3-9
Setting the Anchor..... 3-9
Weighing the Anchor 3-9

Section 4 • Electrical

Electrical System 4-1
DC Electrical System..... 4-1
Battery 4-1
Battery Box 4-1
Main DC Breaker 4-2
Component Breakers 4-2
12V Accessory Receptacle 4-2
Battery Switch (CE Option) 4-3
Trolling Motor Wiring (Option) 4-3
Trolling Motor Connection..... 4-3
Wiring Identification Chart 4-4
Electrical Schematics & Harnesses 4-5

Section 5 • care & Maintenance

Routine Care & Maintenance 5-1
Hull 5-1
Waxing the Gel Coat Surfaces 5-1
Hull Maintenance..... 5-2
Hull Blistering 5-2
Prevention 5-1
Bottom Painting 5-2
Bottom Painting a Bare Hull..... 5-3
Bottom Painting a Pre-Painted Hull..... 5-3
Rubrail care 5-4
Cleaning Fiberglass & Non-Skid 5-4
Stainless Steel Care 5-4
Aluminum Care 5-5
Cushions..... 5-5
To Clean Your Cushions..... 5-5
Cleaning Your Instrument Gauges 5-6
Canvas Care and Maintenance..... 5-6
Maintaining a Good Appearance..... 5-6
On a Regular Basis..... 5-6
Cleaning stubborn Stains..... 5-7
Maintaining Zippers and Hardware..... 5-7

Downloaded from www.Manualslib.com manuals search engine

Cleaning Acrylic Windscreen..... 5-7
Long term Storage 5-7
Engine 5-7
Fuel System 5-8
Electrical System 5-8
Battery 5-8
Deck..... 5-8
Drainage..... 5-8
Avoid Loss 5-9
Cover..... 5-9
Trailer Storage 5-9
Environment 5-9
Reinforcement Location Diagram 5-10
Reinforcement Locations..... 5-11
Maintenance Log..... 5-12

Attachments

Commissioning Checklist
Product Registration Card

PREFACE

This Owner's Manual has been written to provide specific information about your boat and it should be read carefully. Keep this booklet with the Manuals in the Owner's Manual Packet. The Owner's Manual Packet has been compiled to help you operate your boat with safety and pleasure. It contains details of the boat, the equipment supplied or fitted, it's systems and information on it's operation and maintenance. Please familiarize yourself with the boat and it's operation before using it. If this is your first boat, or you are changing to a type of boat you are not familiar with, for your own comfort and safety, please ensure that you obtain handling and operating experience before "assuming command" of your boat. Your Boston Whaler® dealer or local Yacht Club will be pleased to advise you of marine safety classes and safe boating classes in your area.

INFORMATION IN THIS PUBLICATION IS BASED ON THE LATEST PRODUCT SPECIFICATIONS AVAILABLE AT PRINTING, BOSTON WHALER® BOATS, INC. RESERVES THE RIGHT TO MAKE CHANGES AT ANY TIME WITHOUT NOTICE, IN THE COLORS, EQUIPMENT, SPECIFICATIONS, MATERIALS AND PRICES OF ALL MODELS, OR TO DISCONTINUE MODELS. SHOULD CHANGES OR MODIFICATIONS TO THE MODELS BE MADE BOSTON WHALER® IS NOT OBLIGATED TO MAKE SIMILAR CHANGES OR MODIFICATIONS TO MODELS SOLD PRIOR TO THE DATE OF SUCH CHANGES.

BOSTON WHALER® • A BRUNSWICK COMPANY
MRP #2023863
Printed in the U.S.A. © Boston Whaler, Inc. All rights reserved.
150 Montauk
May, 2010

THE FOLLOWING ARE REGISTERED TRADEMARKS OF THE BRUNSWICK CORPORATION:
Montauk, Boston Whaler®

Specifications and standard equipment are subject to change. Boston Whaler is not responsible for changes to parts or accessories manufactured by companies other than Boston Whaler. Active Deck Suspension System, Boston Whaler, Whaler, the Boston Whaler logo, Conquest, Dauntless, Montauk, and Outrage are registered trademarks of Boston Whaler, Incorporated. Accutrack, Unibond, The Unsinkable Legend, Ventura, and Whaleboard are trademarks of Boston Whaler, Incorporated. Mercury and Optimax are registered trademarks of Mercury Marine, and SmartCraft and Verado are trademarks of Mercury Marine. Trademarks of others are the property of their respective owners. All mercury engine information provided by Mercury Marine, June 2007. Information contained within this publication is believed to be correct at the time of printing.

Downloaded from www.Manualslib.com manuals search engine

Boston Whaler Limited Warranty

Boston Whaler, Inc. ("Boston Whaler") provides the following Limited Warranty to the original retail owner of its 2011 model year boats, if purchased from an authorized Boston Whaler Dealer and operated under normal, non-commercial use ("Boat''), subject to the remedies, exclusions, and limitations set out below.

1. Ten-Year Pro-Rated Structural Hull Limited Warranty: Any Structural Hull Defect in material or workmanship which is reported within ten (10) years from the date of sale to the original purchaser will be repaired or replaced at Boston Whaler's sole discretion based on the following depreciation schedule. The "Hull" shall mean the single fiberglass molded shell and integral structural components. A Structural Hull Defect shall mean a substantial defect in the Boat's Hull which causes the boat to be unfit or unsafe for general use as a pleasure craft under normal operating conditions.

Year	1	2	3	4	5	6	7	8	9	10
Boston Whaler Pays	100%	100%	100%	100%	100%	90%	70%	50%	30%	10%
You Pay	0%	0%	0%	0%	0%	10%	30%	50%	70%	90%

2. Three-Year Limited Warranty on Components Manufactured or Installed By Boston Whaler: Boston Whaler will repair or replace, at its sole discretion, any components manufactured or installed by Boston Whaler that are defective in factory materials and/or workmanship, which are reported within three years from the date of sale to the original purchaser, and are not addressed in the specific warranties listed in paragraph 1 or 3 or set out in the Exclusions paragraph below.

3. One-Year Limited Warranty on Upholstered Items, Canvas, Teak, and Powder Coating: Boston Whaler will repair or replace, at its sole discretion, any upholstered items, canvas, teak, and powder coating manufactured or installed by Boston Whaler that are defective in factory materials and/or workmanship and are reported within one year from the date of sale to the original purchaser.

EXCLUSIONS

This limited warranty does not apply to any boat which has been salvaged or declared a total loss or constructive total loss for any reason not covered in this limited warranty. This warranty also does not apply to the following items:

(1) Expenses for hauling out, transportation to and from the dealer or the Boston Whaler factory for warranty service.

(2) Equipment or accessories which are not installed by Boston Whaler or which carry their own individual warranties, including but not limited to engines, engine components, batteries, propellers, controls, steering mechanisms, and electronics.

(3) Damage or deterioration of cosmetic surface finishes, including discoloration, chalking, cracking, crazing, fading or oxidation of gel coat, stress lines, plated or painted metal and stainless steel finishes, plastics or acrylic materials, or anti-fouling bottom paint.

(4) Windshield breakage and leakage.

(5) Any Boston Whaler boat initially sold at retail by a party other than an authorized Boston Whaler dealer.

(6) Damage resulting from abuse, misuse, accidents, overloading or powering in excess of the recommended maximum horsepower.

(7) Failure of the owner to use, maintain, or store the boat as specified in the Boston Whaler owner's manual; and any other failure to provide reasonable care and maintenance. Normal wear and tear maintenance items are excluded from warranty coverage including but not limited to filters, bulbs, batteries, bungees, anchor rope, trailer finishes, tires, brakes, bearings and lights.

Downloaded from www.Manualslib.com manuals search engine

(8) Any Boston Whaler boat which has been altered or modified from Boston Whaler factory specifications, including penetration of the hull by anyone other than Boston Whaler factory personnel or Boston Whaler authorized dealer service personnel following factory specified procedures.

(9) Use of improper trailer.

(10) Any Boston Whaler boat used for commercial, which includes but is not limited to any for-profit uses, or other revenue-generating purposes.

(11) Any representation or implication relating to speed, range, fuel consumption or estimated performance characteristics.

(12) Any failure or defect caused by an act of nature resulting in damage, cost, or expense;

(13) Any failure or defect arising from a previous repair made by a non-authorized service provider.

(14) Any item exceeding the expressed coverage limits specified in any Boston Whaler Limited Warranty.

(15) Any defect or repair requiring redesign of the Boat, except pursuant to the recall provisions of the United States Federal Boat Safety Act of 1971 or the recall laws of any other foreign jurisdiction.

SOLE REMEDY

THE REMEDY OF REPAIR OR REPLACEMENT OF PARTS OR MATERIALS THAT ARE FOUND TO BE DEFECTIVE IN FACTORY MATERIALS OR WORKMANSHIP COVERED BY THIS LIMITED WARRANTY SHALL CONSTITUTE THE OWNER'S SOLE AND EXCLUSIVE REMEDY AGAINST BOSTON WHALER FOR ANY CLAIMS WHATSOEVER OF ECONOMIC LOSS RESULTING FROM PRODUCT FAILURE. In keeping with environmental policies and practices, Boston Whaler reserves the right to utilize reconditioned, refurbished, repaired or remanufactured products or parts in the warranty repair or replacement process. Such products and parts will be comparable in function and performance to an original product or part and warranted for the remainder of the original warranty period. In no event shall any repair or replacement under this Limited Warranty exceed the fair market value of the product as of the date of the owner's claim. Acceptance of any product returned or any refund provided by Boston Whaler shall not be deemed an admission that the product is defective. Products that are replaced become the property of Boston Whaler.

OTHER LIMITATIONS

EXCEPT AS SET FORTH HEREIN, THERE ARE NO OTHER WARRANTIES EITHER EXPRESS OR IMPLIED PROVIDED BY BOSTON WHALER ON THIS BOAT. ALL OTHER WARRANTIES, EXPRESS OR IMPLIED, INCLUDING IMPLIED WARRANTIES OF FITNESS AND MERCHANTABILITY, ARE EXPRESSLY EXCLUDED. BOSTON WHALER FURTHER DISCLAIMS ANY LIABILITY FOR ECONOMIC LOSS ARISING FROM CLAIMS OF PRODUCT FAILURE, NEGLIGENCE, DEFECTIVE DESIGN, MANUFACTURING DEFECT, FAILURE TO WARN AND/OR INSTRUCT, LACK OF SEAWORTHINESS, AND ANY OTHER THEORY OF LIABILITY NOT EXPRESSLY COVERED UNDER THE TERMS OF THIS LIMITED WARRANTY.

ANY IMPLIED WARRANTY OF MERCHANTABILITY OR FITNESS FOR A PARTICULAR PURPOSE IS DISCLAIMED. TO THE EXTENT THE IMPLIED WARRANTY CANNOT BE DISCLAIMED, IT IS LIMITED TO THE SHORTER OF ONE YEAR FROM THE DATE OF DELIVERY TO THE FIRST RETAIL OWNER OR THE DURATION OF THE RESPECTIVE EXPRESS LIMITED WARRANTIES STATED HEREIN. TO THE EXTENT ALLOWED BY LAW, NEITHER BOSTON WHALER, NOR THE SELLING DEALER, SHALL HAVE ANY RESPONSIBILITY FOR LOSS OF THE BOAT, LOSS OF TIME, INCONVENIENCE, COMMERCIAL LOSS OR CONSEQUENTIAL DAMAGES. SOME STATES DO NOT ALLOW LIMITATIONS ON HOW LONG AN IMPLIED WARRANTY LASTS, SO THE ABOVE LIMITATION MAY NOT BE APPLICABLE. SOME STATES DO NOT ALLOW THE EXCLUSION OR LIMITATION OF

Downloaded from www.Manualslib.com manuals search engine

INCIDENTAL OR CONSEQUENTIAL DAMAGES, SO THE ABOVE LIMITATIONS OR EXCLUSIONS MAY NOT BE APPLICABLE. THIS WARRANTY GIVES THE OWNER SPECIFIC LEGAL RIGHTS, AND THE OWNER MAY ALSO HAVE OTHER RIGHTS WHICH VARY FROM STATE TO STATE OR COUNTRY TO COUNTRY.

RETAIL CUSTOMERS IN THE EUROPEAN ECONOMIC AREA (EEA) MAY HAVE LEGAL RIGHTS UNDER APPLICABLE NATIONAL LEGISLATION REGARDING THE SALE OF CONSUMER GOODS WHICH ARE NOT AFFECTED BY THIS LIMITED WARRANTY. THE RETAIL CUSTOMER'S LEGAL RIGHTS UNDER ANY APPLICABLE NATIONAL LEGISLATION REGARDING THE SALE OF CONSUMER GOODS SHALL NOT BE AFFECTED. Information on authorized EEA dealers and EEA Privacy may be obtained by contacting Boston Whaler at www.whaler.com.

STATUTE OF LIMITATIONS

Any action for rescission or revocation against Boston Whaler shall be barred unless it is commenced within one (1) year from the date of accrual of such cause of action. This provision does not grant any consumer a right of rescission or revocation against Boston Whaler, where such right does not otherwise exist under applicable law. Some states may not allow the applicable statute of limitations for rescission or revocation to be reduced, so this provision may not apply to each retail owner.

OWNER'S OBLIGATIONS

To initiate a warranty claim, it is the responsibility of the purchaser to contact an authorized Boston Whaler dealer immediately after discovery of any defect, describe the nature of the problem, and provide a hull serial number, date of purchase, and name of selling dealer. The authorized dealer will notify Boston Whaler, who is solely responsible for determining and authorizing in writing the remedial action(s) to be performed at either an authorized Boston Whaler dealership chosen by Boston Whaler or at the Boston Whaler factory. The purchaser should notify Boston Whaler of any boat being repaired by an authorized Boston Whaler dealer which has been at the dealership for fifteen (15) days, or of any claimed defect which was not corrected after one repair attempt. Our privacy policies are available at www.whaler.com.

ASSIGNMENT OF COMPONENT WARRANTIES

Except as expressly set out herein, all warranties provided by the manufacturers and distributors of components, equipment, and parts on the boat (collectively "Component Manufacturers") are hereby assigned to the owner to the extent permitted by the Component Manufacturers, as the owner's sole and exclusive remedy with respect to such items.

REGISTRATION & WARRANTY TRANSFER POLICY

Boston Whaler provides each new boat owner with a product registration card which should be filled out and sent to Boston Whaler within 30 days of purchase. Please complete and return the product registration card within 30 days of purchase of your boat in order to facilitate processing of warranty claims and for manufacturer notifications. The ten-year, three-year, and one-year limited warranties are transferable to a subsequent owner, except this limited warranty will not transfer to any new owner of a boat which has been salvaged and resold, or resold after a declaration of a total loss or a constructive total loss, i.e. the cost of repair exceeds the value of the boat. The new owner must fill out and send in a Boston Whaler warranty transfer form, accessible from www.whaler.com, a copy of the bill of sale, and a $50.00 fee to Boston Whaler, 100 Whaler Way, Edgewater, Florida 32141, within 30 days of purchase.

MODIFICATIONS & SEVERABILITY

The terms and conditions contained herein, as well as those of any documents prepared in conjunction with the sale of this vessel may not be modified, altered or waived by any action, inaction, or representations, whether oral or in writing, except upon the expressed, written authority of a management level employee of Boston Whaler. The invalidity or unenforceability of any one or more of the provisions herein shall not affect the validity and enforceability of the other provisions.

World Headquarters, 100 Whaler Way, Edgewater, FL 32141
Phone (386) 428-0057
Internet Address: www.whaler.com

Downloaded from www.Manualslib.com manuals search engine

PRIVACY STATEMENT

Thank you for purchasing a boat or requesting information from Boston Whaler! This Privacy Statement is to inform you how we collect, use, disclose, and safeguard the personal information you provide to us through your purchases, requests for brochures, product registration cards, promotions, surveys, call centers, or other customer contacts. To see our full Privacy Policy and any updates, please visit www.whaler.com and select the Privacy Statement link.

"Personal information" may include your name, age, mailing address, residential phone number, or e-mail address. It may also include income ranges, marital status, product or lifestyle preferences, and information concerning dealer service.

How We Collect Personal Information: Our authorized dealer provided Boston Whaler or our company in the European Union with personal information collected at the time of your boat order/purchase with other product registration data and will continue to provide warranty and servicing information on your boat. We will send you customer satisfaction surveys which you may elect to return to provide us with information on your boat purchase and your servicing needs. Your personal information may be gather5ed by or shared with Boston Whaler's marketing providers and affiliated companies, who have comparable levels of privacy protection, for the purposes described in this statement. Boston Whaler, your dealer, and our marketing providers collect personal information when your request information about our companies and from surveys, promotions, contests, correspondence, your e-mails, telephone inquiries, web forms, and other communications.

How We Use & Disclose Personal Information: Unless you advise us otherwise, Boston Whaler, our authorized dealers, affiliated companies, and our marketing providers may generally collect, use, disclose, hold, and file your personal information for the following purposes: (1) Providing goods, brochures, information, incentives, and/or services to you or on your behalf; (2) Fulfilling the terms of our limited warranty or other service obligation; (3) Facilitating recalls or service campaigns if necessary; (4) Reviewing goods and/or services provided to you in product, services, and marketing analyses; (5) Ensuring your satisfaction through surveys or other contacts; (6) Administration, billing, accounting, and collections; and protecting against fraud and error; and (7) Investigating a breach or a contravention of a law, complying with a subpoena, warrant, court order, or as required or otherwise permitted by law. **BOSTON WHALER WILL NOT SELL YOUR PERSONAL INFORMATION OR SUBJECT YOU TO TELEMARKETING OR UNSOLICITED E-MAIL.**

Safeguards: We use security safeguards appropriate to the sensitivity of personal information to protect it from loss or theft, as well as prohibiting unauthorized access, disclosure, copying, use or modification of your personal information. These safeguards include restricted access to offices and equipment, security clearances, the use of passwords and/or encryption, publishing our privacy policy to appropriate personnel with instructions to act in accordance with its principles, and contractual provisions with our marketing agents and authorized dealers to follow the principles of our privacy policy.

Access and Correction to Your Personal Information: Subject to the exceptions provided by applicable law, we will provide, upon written request, your specific personal information collected in a form which is generally understandable. Your Personal Information is held by us and for us by our marketing agency, AVALA, who has contractually agreed to protect your information according to our privacy policies at the following addresses: Boston Whaler Inc., 100 Whaler Way, Edgewater, FL 32141. Please direct corrections, withdrawal of consent for specific purpose, complaints or other inquiries regarding personal information to: Terry Domian, AVALA Marketing Group; 1078 Headquarters Park Drive, Fenton, MO, 63026; Phone: (636) 343-9988, Fax: (636) 326-3282, E-mail: terryd@Marketing Agencymarketing.com. You can withdraw consent for us to use your personal information at any time or provide corrections upon providing to us a 30-day notice, unless withdrawing consent would impede the performance of legal obligations. We are requires by law to provide you with information for product recall and other product safety relates purposes. The withdrawal of your consent may also adversely affect our ability to provide products and services to you and to maintain our relationship. Please note, notifying us will not result in withdrawing consent from your dealer, who should be contacted separately.

Obtaining Consent: If any supplementary disclosure is required, we will obtain your consent for disclosure to other persons or organizations and for other purposes than stated herein, unless otherwise permitted by law.

Thank you again for your business. We hope you have many years of wonderful boating experiences!

Downloaded from www.Manualslib.com manuals search engine

Owner's manual

The material here and in the rest of the Owner's Manual Packet:

- Gives you basic safety information;
- Describes the features of your boat;
- Describes the equipment on your boat;
- Describes the fundamentals of boat use; and
- Contains service and maintenance information.

You must learn to operate this boat as well as read, understand and use this manual.

What this manual **does not** give you is a course in boating safety, or how to navigate, anchor or dock your boat. Operating a power boat safely requires more skills, knowledge and awareness than is necessary for a car or truck.

Your responsibilities

For your safety, the safety of your passengers, other boaters and people in the water, you must:

- Take a boating safety course;
- Get instruction in the safe and proper handling of your boat;
- Understand and follow the "rules of the road";
- Learn how to navigate.

Source of Information

In North America, contact one of the following for boating courses:

- U.S. Coast Guard Auxiliary
- U.S. Power Squadron
- Canadian Power and Sail Squadrons
- Red Cross
- State Boating Offices
- Yacht Club

Contact the Boat/U.S. Foundation at 1-800-336-2628 or go to www.boatus.com/foundation

Outside of North America, contact your boat dealer and/or your governmental boating agency for assistance.

A comprehensive background in boating can be found in the book, *Chapman - Piloting, Seamanship and Small Boat Handling*, by Elbert S. Maloney, published by Hearst Marine.

Warranties

In addition to the Boston Whaler® Limited Warranty for your boat (See next page), each component and/or system on your boat has its own warranty that will be found with the specific information and manual for that component. The manuals are included with your Owner's Manual Packet. Locate and read the individual warranties; then keep them together for easy future reference.

Contact Phone Numbers and Internet Addresses

Boston Whaler, Inc.

Phone.....1-877-294-5645
Internet .....www.whaler.com

United States Coast Guard

Phone.....1-800-368-5647
Internet .....www.uscgboating.org

Boat US Foundation

Phone.....1-800-336-2628
Internet ..... www.boatus.com/foundation

Canadian Coast Guard

Phone.....1-800-267-6687
Internet ..... www.ccg-gcc.gc.ca/main_e.htm

Downloaded from www.Manualslib.com manuals search engine

Explanation of Safety Labels

The most important aspect of boating is safety. Although every effort is made to address the numerous issues regarding the safe usage of your boat, it is strongly recommended that you avail yourself of the training and knowledge available through boating safety courses, etc.

Warning Labels

Mounted at key locations throughout your boat are warning labels (See page 1-19) which advise the owner/operator of imperative safety precautions to follow when operating and/or servicing equipment.

The examples below indicate the level of hazard by color and explanation.

⚠ DANGER

Denotes an immediate hazard exists that WILL result in severe personal injury or death.

⚠ WARNING

Denotes hazards or unsafe practices that MAY result in severe personal injury or death.

⚠ CAUTION

Denotes hazards or unsafe practices that COULD result in minor personal injury, product or property damage.

NOTICE

Denotes information that is important to know prior to operation and/or maintenance, but is not hazard related.

Safety Precautions

The examples below are of precautions which appear throughout this manual and must be observed when operating or servicing your boat. Learn to recognize the degree of hazard and understand the explanations of safety prior to reading this manual.

Always use common sense in the operation and servicing of your boat.

⚠ DANGER

Denotes an immediate hazard exists that WILL result in severe personal injury or death.

⚠ WARNING

Denotes hazards or unsafe practices that MAY result in severe personal injury or death.

⚠ CAUTION

Denotes hazards or unsafe practices that COULD result in minor personal injury, product or property damage.

NOTICE

Denotes information that is important to know prior to operation and/or maintenance, but is not hazard related.

Downloaded from www.Manualslib.com manuals search engine

SAFE Boating means:

- Knowing the limitations of your boat
- Following the "RULES of the ROAD"
- Keeping a sharp lookout for people and objects in the water.
- Not boating in water or weather conditions that are beyond the boat's and operator's capability.
- Never operating the boat while under the influence of drugs or alcohol.
- Being aware of your passengers safety at all times.
- Reducing speed when there is limited visibility, rough water, people in the water nearby, boats or structures.

In Addition:

- Maintain your boat and its safety and other systems as recommended in this manual.
- Have the boat inspected by a qualified mechanic or dealer, at least annually.
- Ensure that the Coast Guard required safety equipment is on board and functioning.

NOTICE

As a boat owner or operator, YOU are responsible for your safety and the safety of your passengers and other boaters.

Boating in beautiful weather and calm water conditions can be a wonderful experience. Boating however requires considerably greater skills than operating a land vehicle. Taking a boating course is the best way to prepare for a safe and enjoyable experience on the water.

- Take a Coast Guard, U.S. Power Squadron or equivalent boating safety course. (Call the Boat/U.S. Foundation at 1-800 336-2628 for information on available courses, or go to: "www.boatus.com/foundation" on the internet.)
- Get hands-on training on how to operate your boat properly.

Safe Boating Checklist

Before Departure

- ☐ Update checklists when equipment is added or modified.
- ☐ Weather-forecast safe
- ☐ Required documents-on board
- ☐ Navigation charts & equipment-on board
- ☐ Safety equipment-on board
- ☐ Safety training-passengers & crew instructed on procedures, location, and use of safety equipment.
- ☐ Drain plugs-installed
- ☐ Bilge pumps-working & clean
- ☐ Navigation lights-working
- ☐ Sound signal device on board
- ☐ Fuel system-no leaks or fumes
- ☐ Power steering fluid-filled (if applicable)
- ☐ Steering system-working smoothly & properly
- ☐ Battery-electrolyte level within range
- ☐ Float plan-filed with friend or relative

Trailering (if applicable)

- ☐ Boat position-secure on trailer
- ☐ Tiedowns-tight
- ☐ Winch-locked
- ☐ Trailer hitch-connected
- ☐ Safety chains-attached
- ☐ Swing tongue-secured with safety clip
- ☐ Engine clearance-in trailering position (See engine manual for recommended guidelines)
- ☐ Electrical-Lights, brake lights, turn signals working
- ☐ Mirrors-adjusted for trailering

After Return

- ☐ PFD's & other safety gear-dry, stowed for next use
- ☐ Fuel tanks-filled (allow for expansion) to prevent condensation
- ☐ Fuel system-no leaks
- ☐ Bilge pump-operating properly
- ☐ Bilge-clean, no leaks
- ☐ Float plan-notify person with whom you filed plan

Downloaded from www.Manualslib.com manuals search engine

General Considerations

- Know how your boat handles under different conditions. Recognize your limitations and the boat's limitations. Modify speed in keeping with weather, sea and traffic conditions.
- Instruct passengers on location and use of safety equipment and procedures.
- Instruct passengers on the fundamentals of operating your boat in case you are unable to do so.
- You are responsible for passenger's actions. If they place themselves or the boat in danger, immediately correct them.
- Remember the "Rule of Thirds": one third total fuel usage for the trip out; one third total fuel sage while out; one third total fuel usage for the return trip.

Maintain Control

On the water there are no marked traffic lanes, no traffic signs or lights, and boats have no turn signals. The boat operator must keep her or his attention focused not only on what's ahead but what's on the left, right and behind the boat.

The operator must always be alert to approaching boats (from the rear, right and left sides, as well as those ahead). There can be people in the water, partially submerged debris, and other navigational hazards such as rocks, sand bars or dangerous currents, to name a few.

Your passengers are relying on you to operate and maneuver the boat safely so that they are not in danger of going overboard. If you turn too quickly, increase or decrease speed abruptly, your passengers are at risk of being thrown overboard or thrown about the boat.

When visibility becomes impaired because of weather, time of day or high bow angle you must slow down so that you have sufficient time to react if an emergency occurs. Nearby boats face similar risks in avoiding a collision with you.

Boarding

- Board only one person at a time.
- Never jump into boat. Step or climb into cockpit.
- Load gear after you are aboard. Carrying gear while boarding can cause you to lose balance.
- Distribute weight evenly.
- Instruct passengers where to sit during on-plane operation to reduce the possibility of falling overboard during high speed maneuvers.
- If gear is not immediately needed, stow it in secure areas.
- Safety gear must be immediately accessible at all times.

Impaired Operation

⚠ WARNING

CONTROL HAZARD-Federal laws prohibit operating a boat while under the influence of alcohol or drugs. These laws are vigorously enforced.

The detrimental effects of alcohol and drugs are increased by wind, waves and sun, and will decrease your response time and ability to act in critical situations. Give special attention to the effects of alcohol and drugs while boating. No other single factor causes as many marine accidents and deaths. Death or serious injury and damage to personal and private property can result from being impaired while operating a boat.

⚠ WARNING

A qualified operator must be in control of the boat at all times. Do not operate the boat while under the influence of alcohol or drugs. never operate your boat at speeds which exceed the operator's ability to react if an emergency develops. At night, turn on the appropriate navigation lights and cruise at a reduced speed that will allow you plenty of time to avoid dangerous situations.

Downloaded from www.Manualslib.com manuals search engine

⚠ WARNING

Death or serious injury can result if you fail to observe these safety rules:

- **Anyone who controls the boat should have taken a boating safety course and have trained in the proper operation of the boat.**
- **Always operate the boat at speeds that will not put people or property in danger.**
- **Be constantly aware of conditions in all directions when underway and before turning.**
- **Reduce speed, use a lookout to identify possible hazards or difficulties, and turn on navigation lights when:**

  - visibility is impaired;

  - in rough water; and

  - in congested waterways.
- **Watch your wake. It can capsize a small boat or damage moored boats or other property. You are responsible for damage caused by your wake.**

⚠ WARNING

NEVER operate a boat at a speed at which you do not feel in control.

⚠ WARNING

STABILITY HAZARD

- **Load boat properly. The manufacturer's load rating is the maximum allowed under normal conditions. Adjust downward if weather, water or other conditions are adverse.**
- **Allow passengers to ride only in areas that do not pose a hazard to themselves or the boat.**

  DO NOT allow passengers to ride on the bow of a closed bow boat.

  DO NOT allow several passengers to ride in the bow of a small open-bow boat, causing the boat to "plow" into the water.

  DO NOT allow passengers to ride on the stern cushion or gunwales.

  DO NOT overload the stern.
- **Observe manufacturer's recommended on-plane seating locations.**
- **Passengers should remain seated while boat is moving.**

PERSONAL INJURY HAZARD-Stay alert. Use of drugs, alcohol, or other substances which impair judgement poses a serious threat to yourself and others. The boat operator is responsible for the behavior of passengers.

DROWNING HAZARD-Boats must carry one wearable personal flotation device (PFD) for every passenger on board. Boats must have at least one throwable life preserver.

SLIPPING HAZARD-Wet decks are slippery. Wear proper footwear and use extreme caution on wet surfaces.

Downloaded from www.Manualslib.com manuals search engine

Legally Mandated Equipment (Minimum Required)

Consult your national and state boating law enforcement agency.

The following equipment is the minimum required by the U.S. Coast Guard for a boat less than 26' (7.9 meters) in length.

Personal Flotation Devices (PFD's)

- One (1) Coast Guard approved Type I, II or III PFD for each person aboard or being towed on water skis, tubes, etc.

⚠ WARNING

There is rarely time to reach stowed life jackets in time of emergency. Boaters should always wear a properly fitting, approved life jacket when on the water.

Children and non-swimmers MUST wear PFDs at all times when aboard.

NOTICE

Depending on the state or country of operation, the operator of a vessel may be fined for failure to comply with local or national rules regarding PFD usage.

Fire Extinguisher (Portable)

It is recommended that you carry one (1) A, B or C Type fire extinguisher on board and located near the helm for easy reach.

Fire Extinguisher Location

A storage pocket for the portable fire extinguisher is located on the lower starboard side of the center console.

Whistle, Horn

You must have on board, some means of making a loud sound signal. Navigation rules require that a sound made by any audible device be capable of a four (4) second blast, and must be audible for 1/2 mi. (.80 Km).

Visual distress Signals

Boats operating in coastal waters, the Great Lakes & US owned boats on the high seas are required to carry approved visual distress signals for nighttime use. They must be readily accessible, in serviceable condition and not be expired.

Store all pyrotechnic signals in a well marked, waterproof container.

Additional Recommended equipment for safe operation

In addition to the legally mandated equipment, the following items are recommended for safe boating.

- First Aid kit
- Charts/Maps
- Visual distress signals (for day or night use)
- Marine VHF radio
- Moisture repellent
- Mooring Lines
- Fenders
- Waterproof flashlights
- High power spotlight
- Spare propeller
- Tool kit:
  - Screwdrivers, (phillips & flat)
  - Pliers, (regular, vise-grip, tongue & groove)
  - Wrenches, (box, open end, allen & adjustable)
  - Socket set, (metric and U.S.)
  - Electrical tape & duct tape
  - Hammer
  - Spare parts kit, (spark plugs, fuses, etc.)
- Compass
- Manual bilge pump
- GPS or LORAN
- Spare keys
- EPIRB-Emergency positioning-indicating radio beacon
- Boat hook
- Extra batteries
- Instruction manuals
- Lubricating oil

Downloaded from www.Manualslib.com manuals search engine

Carbon Monoxide (CO)

⚠ DANGER

- **Fumes from the engine(s), Generator(s) and other equipment and appliances that burn fuel contain Carbon Monoxide. Carbon Monoxide can kill you. Open all doors, hatches, curtains and windows to allow fresh air to circulate and dissipate the amounts of Carbon Monoxide present in enclosed spaces, especially when the boat is moored or anchored.**
- **Proper ventilation must be maintained, even during inclement weather to prevent dangerous levels of Carbon Monoxide build-up.**
- **Sleeping aboard a boat will require a working Carbon monoxide detection system, preferably in each sleeping quarter.**

Carbon Monoxide is an oderless, colorless, and tasteless, extremely toxic gas produced by engines, heaters, stoves or generators. When inhaled it combines with hemoglobin in the blood, preventing absorption of oxygen and is unlikely to be noticed until the person is overcome.

Prolonged exposure to low concentration or very short exposure to high concentrations can result in asphyxiation and death.

Symptoms of Carbon Monoxide poisoning include:

- Dizziness
- Ringing in the ears
- Unconsiousness
- Headaches
- Nausea

GET MEDICAL ATTENTION AS SOON AS POSSIBLE.

Symptoms of CO poisoning are often confused with seasickness or intoxication, so those affected may not receive the medical attention they need.

The poisoning victim's skin often turns cherry red. If CO poisoning is suspected, have the victim breath fresh air deeply. If breathing stops, resusitate. A victim often revives, then relapses because organs are damaged by lack of oxygen.

Carbon Monoxide can accumulate in dangerous concentrations anywhere in or around your boat including on back decks, swim platforms, or in water around exhausts. CO can remain in or around your boat at dangerus levels even if your engine is no longer running.

Remember:

- If you can smell engine exhaust, you are inhaling CO.
- Changing course and speed to place boat heading into the wind can improve ventilation.

To minimize the danger of Carbon Monoxide accumulation when the Engine is running (or by use of fuel burning equipment.):

- Do not idle the engine without moving the boat for more than 15 minutes at a time.
- Inspect the exhaust system regularly.
- Operate all fuel burning appliances, such as charcoal, propane, LPG, CNG or alcohol cooking devices in areas where fresh air can circulate.

⚠ DANGER

Never ignore an alarm.

In the event the CO alarm activates:

- Evacuate enclosed areas immediately.
- Shut OFF any fuel burning equipment or appliances.
- Open hatches, doors, portlights, etc. to improve ventilation.
- If making way, head boat into the wind.

Downloaded from www.Manualslib.com manuals search engine

⚠ DANGER

Even in rainy cold weather, ventilation must be maintained to avoid Carbon Monoxide poisoning. You will get wet and/or cold.

Examples of accumulation of Carbon Monoxide
Fig. 1.7.1

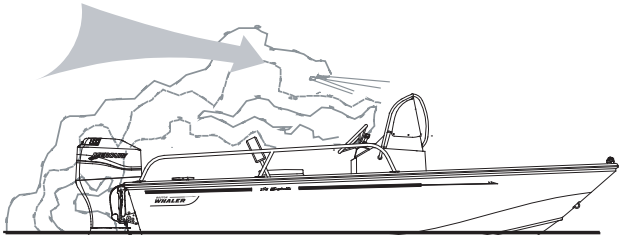

WINDS BLOWING EXHAUSTS TOWARD BOAT OCCUPANTS.

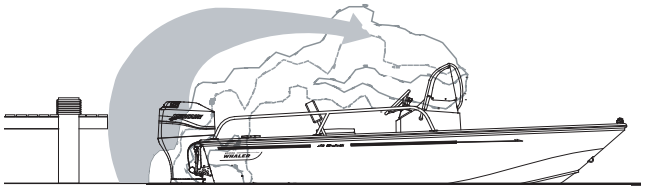

BLOCKING EXHAUSTS

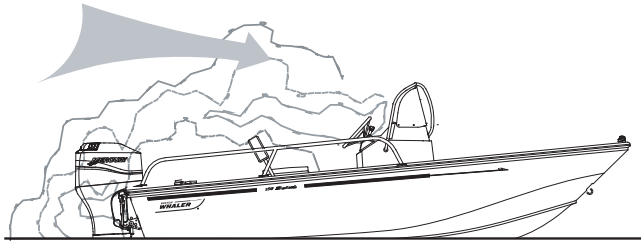

OPERATING WITH "BOW HIGH"

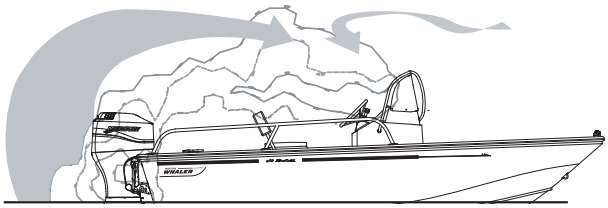

OPERATING AT SLOW SPEED OR DEAD IN WATER

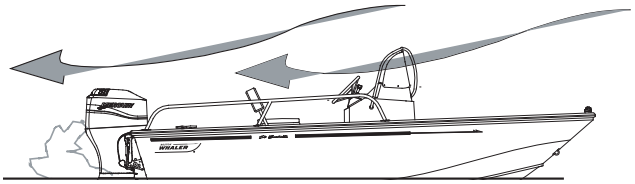

GOOD AIR FLOW

Lifesaving Equipment

Even strong swimmers can tire quickly in the water and drown due to exhaustion, hypothermia, or both. The bouyancy provided by a personal flotation device (PFD) will allow the person who has fallen overboard to remain afloat with far less effort and body heat loss, extending survival time necessary to find and retrieve them.

PFD Requirement

One (1) Coast Guard approved PFD, Type I, II or III for each person aboard or being towed on water skis, tubes, etc.

The law requires that PFDs must be readily accessible, if not worn. "Readily Accessible" means removed from storage bags and unbuckled.

NOTICE

Children and non-swimmers MUST wear PFDs at all times when aboard.

PFD Classifications

Listed below are the several different types of PFDs, each life jacket has different purposes, choose one that will suit your purpose.

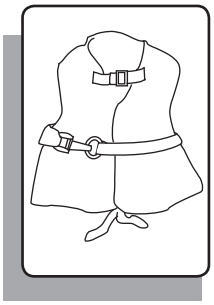

Type I, Off-shore Life Jacket is considered the most bouyant, it is designed to turn an unconscious person face up. Use in all types of waters where rescue may be slow, particularly in cold or rough water conditions.

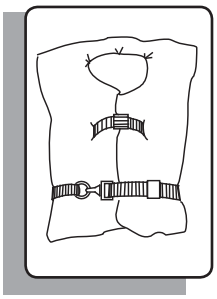

Type II, Near-shore Life Vest, "keyhole" vest with flotation filled head and neck support is also designed to turn a person face up, but the turning action is not as pronounced. Use in calm inland waters or where quick rescue is likely.

Downloaded from www.Manualslib.com manuals search engine

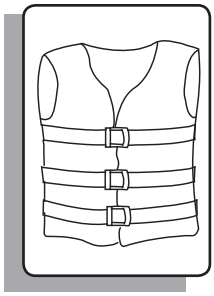

Type III, Flotation-aid Life vest is designed so that conscious wearers can turn face-up. Often designed for comfort while engaged in water skiing or other forms of water activities.

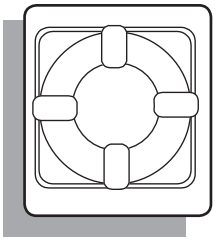

Type IV, Throwable Devices, horseshoe bouys, ring bouys and bouyant cushions are designed to be grasped, not worn.

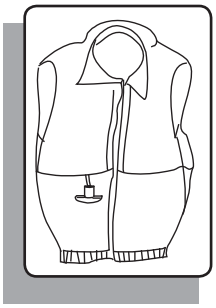

Type V, Special-Use devices, sailboat harnesses, white water vests, float coats, and hybrid vests which have minimum inherent bouyancy and an inflatable chamber.

Before purchasing PFDs, ensure that there is an attached tag indicating they are approved by the U.S.Coast Guard or by your National Boating Law Enforcment Agency.

The operator is responsible for instructing everyone onboard on their location and use. **The best precaution is to wear the PFD at all times while on the boat.**

Downloaded from www.Manualslib.com manuals search engine

Emergency Situations

NOTICE

The law requires the operator to assist any person or boat in distress as long as rendering assistance does not endanger the operator, the passengers or the boat.

Prevention is the safest approach. We hope that you are never involved in an emergency situation, but if you are it is imperative that you react.

Medical Emergency

You may be far from professional medical help when you are boating. At least two (2) persons on board your boat should be CPR certified, and should have taken a first aid course. Your boat should have a well stocked first aid kit on board. In many situations your radio will be your only link to reaching medical assistance. Keep the radio in working order and understand which channels are used for emergencies, these channels are constantly monitored and will be useful when situations arise. Cell phones are becoming more common and can help in some areas, but they are limited and unreliable and should not be used in the place of a good VHF radio.

Water Rescue

In most situations a person that has fallen overboard will succumb to hypothermia if not rescued immediately. Life expectancy decreases as rescue time increases in water temperatures below 70° (21.1°C).

There are three (3) steps that must be taken when a person has fallen overboard:

1. **Returning to the victim:**
   - Immediately make everyone onboard aware that someone is overboard and keep the victim in sight.
   - Slow the boat and keep pointing toward the person overboard. At night or in low light, point the best available light source at the person.
   - Throw a life ring/preserver to the victim, even if they are wearing one it will serve as another marker.

2. **Making contact:**
   - Stop or slow the boat and circle toward the person overboard. Never reverse your boat to pick up someone in the water.
   - Try to approach heading into the wind or into the waves.
   - Keep person overboard constantly in sight.
   - When almost alongside, stop the engine in gear to prevent propeller “windmilling”.

3. **Getting back aboard:**
   - Try to reach the person overboard with a pole, or by throwing a life preserver. NEVER swim to them except as a last resort.
   - Assist the person in boarding. Boarding should be done at the stern of the boat.
   - If the person is injured or incapable of boarding by themselves, a rescuer should don a life preserver with a safety line and enter the water to assist the person onto the boat.
   - Handle the person carefully, spinal injuries might have occurred and could be worsened by rough handling.
   - Check for other injuries, render medical assistance immediately.

Fire

Fire is a serious boating hazard. Boats will burn quickly. Do not remain onboard and fight a fire for more than a few minutes. If the fire is out of control and cannot be put out with the fire suppression equipment onboard, abandon ship immediately.

The fumes released during a fire are toxic and should be avoided. Even after the fire has been extinguished, proper ventilation of the area is required to minimize exposure to these harmful fumes.

Downloaded from www.Manualslib.com manuals search engine

⚠ DANGER

- **Fires can spread quickly. Your reaction to the fire is important. Have the proper fire fighting equipment close at hand, and in good working order to respond quickly.**
- **Small fire extinguishers have small discharge times. Aim at the base of the fire with a sweeping motion to maximize the use of the fire extinguisher contents.**

To lessen the danger of fire:

- Extinguish all smoking materials, shut off blowers, stoves, engine(s) and generator(s).
- Keep bilge area clean, oil and fuel spills should be cleaned immediately.
- If possible throw burning materials overboard.
- If fire is accessible, release the contents of the fire extinguisher(s) into the base of the fire.
- If the fire is in an enclosed compartment, and you have an automatic extinguisher for the compartment, wait 15 min. before opening the compartment. Have an extinguisher handy in case of a flare up.
- If possible, signal for help. Radio, visual, or audible signal should be used as needed. You must render assistance to any boater requesting help.
- If fire is out of control, grab all neccesary survival gear, distress signals, don your PFD and prepare to abandon ship.
- If you do abandon ship, make sure the passengers have PFDs. Take a head count before entering the water and take another head count when in the water. **STAY TOGETHER.**

Flooding, Swamping and Capsizing

In the event of Flooding, Swamping or Capsizing:

Flooding

- Always wear your PFD, or have it within reach.
- If the bilge pump(s) have not automatically turned ON, switch them ON immediately.
- Find the source of the flooding and determine the best fix.
- Keep the bilge pump running until the flooding is under control.
- Call for assistance if the source of the flooding cannot be controlled.
- Head back to port if possible.

Swamping

- Always wear your PFD, or have it within reach.
- Swamping is usually a result of wave action, immediately get control of the helm and turn the boat into the waves.
- Swamping can also be caused by an overloaded boat.
- If the bilge pump has not automatically turned ON, switch it ON immediately.
- The deck scuppers on your boat are designed to drain the deck of water.
- Keep the bilge pump running until the flooding is under control.
- Take a head count of all passengers.

Capsizing

- "Capsized" is when a boat is on its side or completely upside-down (usually as a result of wave action, improper loading or load shifting).
- Always wear your PFD, or have it within reach.
- If the boat will not right itself, get out of the water and climb onto the exposed hull.
- Do a head count of all passengers
- **STAY TOGETHER**
- Usually a capsizing will happen quickly and without warning.
- Use whatever is at hand to signal for help.

Downloaded from www.Manualslib.com manuals search engine

The chances of flooding, swamping or capsizing can be reduced by being aware of:

- Weather
- Water Conditions
- Proper boat handling techniques
- Proper loading of the boat

Collision

In the event of collision:

- Cut the engine(s)
- Always wear your PFD, or have it within reach.
- Check on passengers
- If the bilge pump has not automatically turned ON, switch it ON immediately.
- Determine the amount of damage to your boats structure.
- Call for assistance
- In the event of collision you are required to file an accident report. Contact a state enforcement agency or the nearest U.S. Coast Guard office. If you are boating outside U.S. waters, consult the nation you are visiting for accident reporting requirements.

Propulsion, Control or Steering failure

If there is a propulsion, control or steering failure:

- Stop the engine, (shut off at Ignition or pull on the Emergency Engine Shut-Off Switch.)
- Drop anchor to prevent drifting.
- Determine if the problem can be fixed or will assistance be needed.
- Call for assistance if needed

When loss of propulsion or steering is noticed, your quick reaction is required to prevent further damage to your boat or injuries to your passengers.

Outboard engines require propulsion to control the direction the boat will take. Without propulsion, the steering is virtually useless. If you are in a congested waterway you will need to react quickly to warn others that you have lost power, propulsion or steering control and that assistance will be needed.

Grounding

Running aground may be avoided by paying attention to marker bouys or observing the waves as they form into breakers when passing over a sand bar.

If you do run aground, the course of action depends on how hard the boat hits bottom and whether the boat remains stranded. If it is a simple touch, you may need only to inspect the lower drive of the engine and the hull of the boat. If possible do a thorough inspection before trying to get loose, throwing the boat into reverse before this is done may do more damage.

Distress Signals

Visual Distress Signals, (VDS)

- U.S. Coast Guard regulations require boats in coastal waters and the Great Lakes to carry a Visual Distress Signal (VDS) for day and night use, as well as appropriate for the time of operation. Exempt from the day signals requirement, but not night signals, are boats less than 16 feet (4.8 m), open sailboats less than 26 feet (7.9m), boats participating in organized events and manually propelled boats.
- If you are required to have visual distress signals, at least three safety approved pyrotechnic devices in serviceable condition must be readily accessible. They must be marked with a date showing the service life which must not be expired.
- Carry three signals for day use and three for night use. Some pyrotechnic devices such as red flares, meet both day and night use requirements.
- Store pyrotechnic signals in a cool, dry location. An orange or red watertight container prominently marked “DISTRESS SIGNALS” is recommended.

Downloaded from www.Manualslib.com manuals search engine

Other recognized visual distress signals include:

- Flames in a bucket
- Code flags November & Charlie displayed together.
- Black square & ball on orange background flag
- Orange flag (certified)
- Electric distress light (certified)-for night use
- Dye marker (any color)
- Person waving arms (slowly)
- U.S. ensign flown upside down

Audible Distress Signals, (ADS)

U.S. Coast Guard regulations require one hand, mouth or power operated whistle or horn, audible for at least 1/2 mile.

Other recognized audible distress signals include:

- Radio communication (see **Radio Communication** below)
- Radio-telegraph/telephone alarm
- Position indicating radio beacon (EPIRB)
- Morse Code S-O-S (3 short 3 long 3 short) sounded by any means.
- Fog horn sounded continuously.

Radio Communication

A radio is the boat operator's main method of recieving safety information and summoning aid. VHF-FM radio is the primary means of short range communication. Single sideband radio (SSB) is used for longer range communication.

VHF-FM channel 16 and SSB 2182 kHz are designated for emergency use. Such situations can be categorized as:

- **EMERGENCY-**
  "MAYDAY, MAYDAY, MAYDAY,"- used when life or vessel is in imminent danger.
- **URGENCY-**
  "PAN-PAN, PAN-PAN, PAN-PAN" (pronounced PAHN-PAHN)-used when a person or vessel is in some jeopardy less than indicated by a "MAYDAY" call.
- **SAFETY-**
  "SECURITY, SECURITY, SECURITY" (pronounced SAY-CURE-IT-AY)-used for navigational safety or weather warning.

An emergency situation will be hectic and there will not be time to learn proper radio procedure. **LEARN WHAT TO DO BEFORE YOU NEED TO DO IT.** If you hear a distress call, stop all radio transmissions. If you can directly assist, respond on the emergency frequency. If you cannot assist, do not transmit on that frequency. However, continue to monitor until it is obvious that help is being provided.

Weather

⚠ DANGER

DO NOT attempt to boat in severe weather conditions. Death or serious injury can occur. Get to shore before the weather turns bad.

Getting caught in severe weather is hazardous. Bad weather and/or rough sea or water conditions can cause an unsafe situation. Consult local weather services for up-to-date forecasts on weather and sea conditions. Television, Radio, Internet can give you access to NOAA weather reports that will help you make a determination on where and when to get underway.

Following are some weather related rules:

- Understand the design limitations of your boat.
- Check the weather forecast and water conditions before leaving and while underway.
- Wear a Personal Flotation Device, (PFD).

Downloaded from www.Manualslib.com manuals search engine

⚠ WARNING

A sudden change in wind direction or speed or an increase in wave height indicates deteriorating weather.

NOTICE

Check the weather forecast and water conditions before leaving and while underway

Weather Warning Penants
Fig. 1.13.1

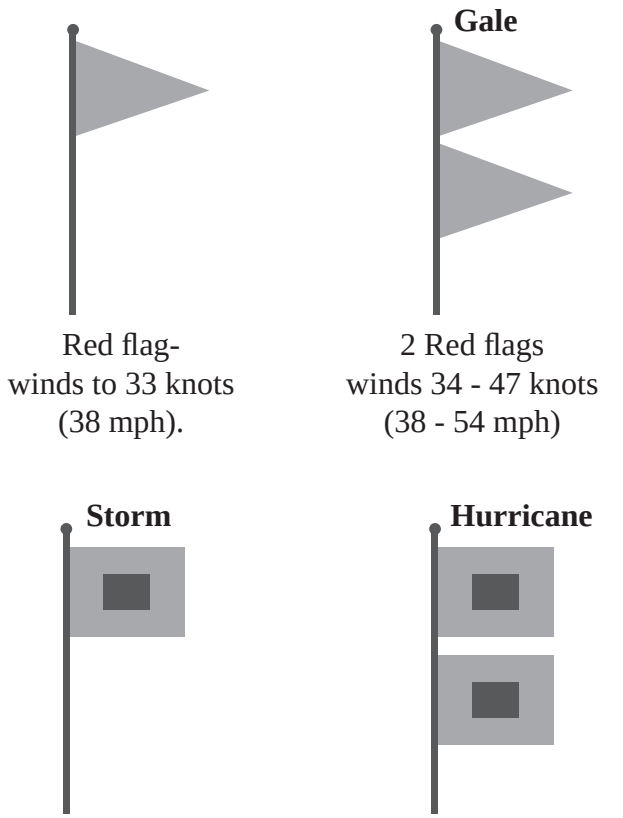

Red flag-
winds to 33 knots
(38 mph).

2 Red flags
winds 34 - 47 knots
(38 - 54 mph)

Square Red flag
w/Black box
winds 48 - 63 knots
(55 - 73 mph)

Two (2) Square Red flags
w/Black box
winds 64+ knots
(74+ mph)

- If a storm approaches, immediately seek a safe harbor.
- If a storm hits have everyone sit in the cabin or cockpit deck in the boat. Head the bow into the wind with enough power to maintain slow headway.
- If you encounter fog, determine your position, set a safe course, slow down and alert other boats of your presence with a sound signal.
- If a lightning storm approaches, the safest action is to dock and disembark. If you cannot return to shore, have passengers go inside the cabin and remain there until the storm passes.
- Stay out of the water during a lightning storm. If caught swimming during a storm, get back into the boat and remain there until the storm passes. (remember that lightning can strike several miles away from the storm itself. Be aware of the storms location relative to your location and the direction the storm is moving).

Swimming, Diving & Water Skiing

Swimming

- Do not swim from a moving boat.
- Many areas prohibit swimming from a boat except in designated areas. Never enter swimming zones.
- Turn off engine in gear (to prevent propeller “windmilling”) before picking up swimmer.

Diving

Recognize and respect diving flags. Keep at least 100 feet (30 meters) away.

Diver’s Flags
Fig. 1.13.2

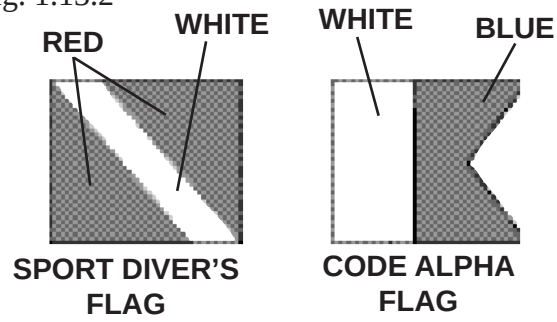

SPORT DIVERS FLAG-Red flag with diagonal white stripe marks a diver in the water.

CODE ALPHA FLAG-Blue and white pennant designates boat being used in dive operations.

Downloaded from www.Manualslib.com manuals search engine

Water Skiing

- Always have at least two persons in the boat, one at the controls and one who can easily and continuously look at the skier.
- Insist that anyone who water skis must know how to swim.
- Insist that skiers wear approved Personal Flotation Devices (PFD's)
- Ski only in daylight when visibility is good.
- Never drive the boat directly behind a water skier. At 22 knots (25 m.p.h.) it takes only 5 seconds to overtake a fallen skier who was 60 meters (200 feet) in front.
- Ski only in areas where skiing is permitted.
- Observe local restrictions on length of tow line.
- Learn the signals to communicate with a skier. The skier is to control the boat through hand signals (Figure 1.14.1).
- Your boat will handle differently while towing a skier. Experiment carefully to learn the difference.
- Skiers may start from the shore or dock, if boat traffic allows. When returning, pick up skiers from water. Do not ski back to shore or dock.
- Give immediate attention to fallen skiers.
- Keep a downed skier in sight and on the operator's side of the boat when approaching the skier. **Never back up to anyone in the water.**
- Turn off engine in gear (to prevent propeller "windmilling") before picking up skier.
- If the skier suddenly releases the tow rope, it can backlash into cockpit. Spotters who are watching the skier must be aware of this fact and be prepared to take appropriate action to avoid injury.

Water Skiing Signals

Skiing Signals
Fig. 1.14.1

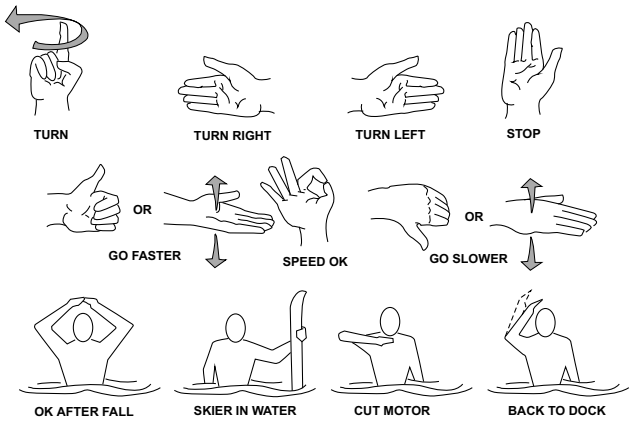

Turn – Arm raised, circle with index finger extended.

Turn Right – Extend arm out from body to the right.

Turn Left – Extend arm out from body to the left.

Stop – Raise arm with palm vertical and facing forward.

Faster – Thumb pointed up or palm up, move hand up and down.

Speed OK – Raise arm and form a circle with thumb and index finger.

Slow Down – Thumb pointed down or palm down, move hand up and down.

OK After a Fall – Clasp hands together overhead.

Skier in Water – Extend one ski vertically out of water.

Cut Motor – Draw finger across throat.

Back to Dock – Pat top of head.

⚠ WARNING

Never allow anyone to board or exit your boat from the water when engines are on.

Downloaded from www.Manualslib.com manuals search engine

⚠ WARNING

SWIMMING/SKIING HAZARD

- Keep clear of areas designated only for swimmers and skin divers. Recognize markers used for such areas.
- Never swim when there is lightning in the area.

SKIING HAZARDS

- Skiers must use a safety approved Personal Flotation Device (PFD).
- Ski only during daylight and in good visibility.
- Avoid shallow water, other boats, navigational aids and other obstructions.
- Keep at least 100 ft. (30 meters) from other objects.
- Never drive directly behind a water skier.
- A competent observer must watch the skier at all times. A competent observer is a person that has the ability to assess when a skier is in trouble, knows or understands water skiing hand signals and is capable of helping a skier.
- Keep a downed skier in constant sight.
- Turn off engine in gear before you get close to person in the water.
- Never back up to anyone in the water.
- Use caution in boat when skier is being towed. Sudden release of tow rope can cause it to backlash into the cockpit.

PERSONAL INJURY HAZARD

Use transom tow ring only to pull water skiers. Unless specified by the manufacturer, any other use, such as parasailing, kite flying, towing other boats, etc. may create too much stress on the tow ring, resulting in personal injury and/or equipment damage.

⚠ DANGER

PROPELLER SAFETY

- Before starting your boat, walk to the stern and look in the water to assure there is no one near your propeller.

  People near propeller may not be visible from helm.
- NEVER allow passengers to board or exit your boat from the water when engines are on.
- Educate passengers about the dangers of propellers
- Be especially alert when operating in congested areas. NEVER enter swimming zones.
- Take extra precautions near boats that are towing skiers or tubers.
- NEVER permit passengers to ride on the bow, gunwale, transom, seatbacks, or other locations where they may fall overboard.
- STOP! if someone falls overboard. Slowly turn the boat around, and keep the person in sight as you approach. Turn your engine off FIRST and then bring the person aboard.
- NEVER reverse your boat to pick someone up out of the water.

Downloaded from www.Manualslib.com manuals search engine

Emergency Engine Stop Switch

⚠ WARNING

Wear the lanyard at all times when operating the boat. Use it to stop only in an emergency. DO NOT use it to shut off the engine during normal operation

Your boat is equipped with an ignition shutdown safety switch. The switch is located on the control console next to the gear shift/throttle control unit. The ignition shut down safety switch incorporates a shut-off switch, switch clip, lanyard and lanyard clip, which is clipped to the operator when running.

If an emergency arises and the engine must be shut down, a pull on the cord to release the clip from the shut-off will shut off the engine.

This switch is designed to shut the engine off when the operator of the boat leaves the control station, either accidentally by falling into the boat, or by being ejected overboard. This would most likely occur as a result of poor operating practices.

Emergency Engine Stop Switch
Fig. 1.16.1

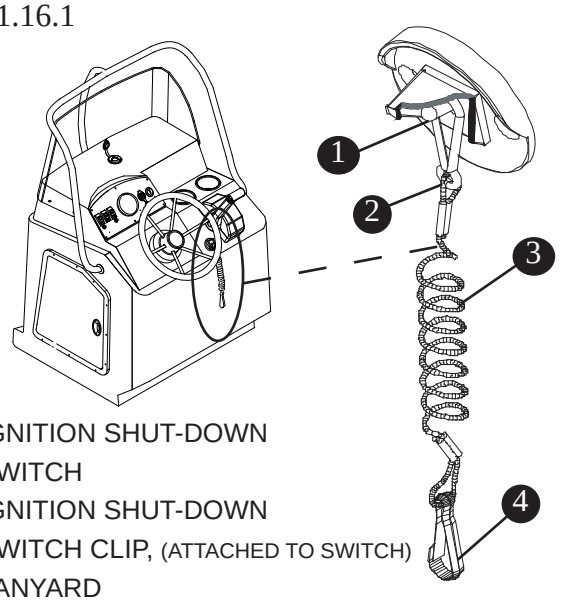

1. IGNITION SHUT-DOWN SWITCH
2. IGNITION SHUT-DOWN SWITCH CLIP, (ATTACHED TO SWITCH)
3. LANYARD
4. IGNITION SHUT-DOWN SWITCH CLIP,(ATTACH TO OPERATOR)

The lanyard should be long enough to prevent inadvertant activation. Do not let the lanyard become entangled.

Accidental loss of power can be hazardous, particularly while docking or in heavy seas, strong current or high winds. Passengers and crew may lose balance and the boat may lose steering control.

Should the operator fall out of the boat at planing speed, it may take several seconds for the engine and propeller to stop turning. The boat may continue to coast for several hundred feet, causing injury to anyone in its path.

Float Plan

Float plans are important to you should you encounter problems on the water. A float plan should contain a description of your boat along with any distinguishing features. It should describe where you will be boating, your departure time and estimated return. The number and names of passengers, and destination should also be noted.

The float plan should be given to a friend or relative, so they can give the information to a national boating agency like the U.S. Coast Guard, in the event you do not return at the time specified on the float plan.

If there are any changes to the float plan they should be conveyed to the person holding the float plan. Once you return you should contact the person holding the float plan to let them know you are back.

Chart Your Course

To avoid boating in unsafe areas where there are underwater obstructions, shallow water, unnavigable conditions such as dangerous currents, and others, you must chart a course. this means having and using National Oceanic and Atmospheric Administration (NOAA) charts for coastal waters, observing and understanding all navigational aids, using the knowledge and guidence of experienced boaters, and being aware of the tides and times where appropriate. If you are boating in an area you are unfamiliar with, proceed with caution and post a lookout to watch for hazards.

Downloaded from www.Manualslib.com manuals search engine

⚠ WARNING

Hitting an object in or under the water or boating in dangerous currents can cause serious injury or death to occupants in the boat.

You must know where the hazards are and avoid them. In uncharted waters, boat very slowly and post a lookout.

If an object is struck or if you run aground:

- **Shut the engine OFF**
- **Check the hull for damage**
- **Check the propeller(s) for damage**
- **If aground, consider the bottom grade before moving off, (damage to the hull and propeller(s) could be worsened).**
- **Determine the tides and whether it will help or hinder you from the grounding.**
- **Do not have anyone other than a trained and competent service tow your boat.**

Environmental Considerations

Fuel & Oil Spillage

Regulations prohibit discharging fuel or oily waste in navigable waters. Discharge is defined as any action which causes a film, sheen or discoloration on the water surface, or causes a sludge or emulsion beneath the water surface. A common violation is bilge discharge. Use rags or sponges to soak up fuel or oily waste, then dispose of it properly ashore. If there is much fuel or oil in the bilge, contact a knowledgeable marine service to remove it. Never pump contaminated bilge overboard. Help protect your waters.

Excessive Noise

Many areas regulate noise limits. Even if there are no laws, courtesy demands that boats operate quietly.

Wake / Wash

Power boat wakes can endanger people and vessels. Each power boat operator is responsible for injury or damage caused by the boat's wake. Be especially careful in confined areas such as channels or marinas. Observe "no wake" warnings.

⚠ WARNING

SPEED HAZARD - Watch your wake. It might capsize a smaller craft. You are responsible for damage caused by your wake.

⚠ WARNING

Reduce speed in congested waterway. Be alert for No Wake markers.

Downloaded from www.Manualslib.com manuals search engine

Homeland Security restrictions

Recreational boaters have a role in keeping our waterways safe and secure. Violators of the restrictions below can expect a quick and severe response.

- **DO NOT** approach within 100 yards, and slow to minimum speed within 500 yards of any U.S. Naval vessel. If you need to pass within 100 yards of a U.S. Naval vessel for safe passage, you must contact the U.S. Naval vessel or the Coast Guard escort vessel on VHF-FM channel 16.
- Observe and avoid all security zones. Avoid commercial port areas, especially those that involve military, cruise line or petroleum facilities. Observe and avoid other restricted areas near dams, power plants, etc.
- **DO NOT** stop or anchor beneath bridges or in channels.

⚠ DANGER

DO NOT approach within 100 yards of any U.S. Naval vessel without first contacting the vessel on VHF-FM channel 16. To do so will result in a quick and severe response.

America's Waterway Watch

In March, 2005, the U.S. Coast Guard officially launched *America's Waterway Watch* to encourage the boating public to report suspicious activities in our nation's ports and waterways. A*merica's Waterway Watch* simply asks anyone who works, lives, or recreates on the water to keep an eye out for suspicious activities. Anyone who spots such activity is asked to call the National Response Center's 24-hour hotline, 800-424-8802 or 877-24WATCH (877-249-2824).

Warning Label Locations

Mounted at key locations throughout the boat (See figure 1.19.1), warning labels advise the owner/operator of imperative safety precautions to follow when operating and/or servicing equipment. **DO NOT REMOVE OR OBSTRUCT ANY WARNING LABEL.** Replace any label which becomes illegible.

Downloaded from www.Manualslib.com manuals search engine

Warning Label Locations

Warning Label Locations
Fig.1.19.1

Required under AB2222 for use on all boats in the State of California

WARNING

Carbon monoxide (CO) can cause brain damage or death.

Engine and generator exhaust contains odorless and colorless carbon monoxide gas.

Signs of carbon monoxide poisoning include nausea, headache, dizziness, drowsiness, and lack of conciousness.

Get fresh air if anyone shows signs of carbon monoxide poisoning.

See Owner's Manual for information regarding carbon monoxide poisoning.

NW-204-05

1

Proposition 65

WARNING

A WIDE VARIETY OF COMPONENTS USED ON THIS VESSEL CONTAIN OR EMIT CHEMICALS KNOWN TO THE STATE OF CALIFORNIA TO CAUSE CANCER AND BIRTH DEFECTS AND OTHER REPRODUCTIVE HARM.

EXAMPLES INCLUDE:

- ENGINE AND GENERATOR EXHAUST
- ENGINE AND GENERATOR FUEL, AND OTHER LIQUIDS SUCH AS COOLANTS AND OIL, ESPECIALLY USED MOTOR OIL
- COOKING FUELS
- CLEANERS, PAINTS, AND SUBSTANCES USED FOR VESSEL REPAIR
- WASTE MATERIALS THAT RESULT FROM WEAR OF VESSEL COMPONENTS
- LEAD FROM BATTERY TERMINALS AND FROM OTHER SOURCES SUCH AS BALLAST OR FISHING SINKERS

TO AVOID HARM:

- KEEP AWAY FROM ENGINE, GENERATOR, AND COOKING FUEL EXHAUST FUMES
- WASH AREAS THOROUGHLY WITH SOAP AND WATER AFTER HANDLING THE SUBSTANCES ABOVE

2

CALIFORNIA RESIDENTS ONLY

THIS WARNING IS ATTACHED TO THE STEERING WHEEL PRIOR TO DELIVERY OF ANY BOATS SOLD IN THE STATE OF CALIFORNIA IN ACCORDANCE WITH CALIFORNIA HEALTH & SAFETY CODE §§ 25249.5-.13

5

4

THIS BOAT HAS BEEN DESIGNED FOR A MAXIMUM OUTBOARD ENGINE WEIGHT OF

305 Lb / 138 kg

NOTE: Boat shown with bow rail and livewell options.

3

DANGER

Carbon monoxide (CO) can cause brain damage or death.

Engine and generator exhaust contains odorless and colorless carbon monoxide gas.

Carbon monoxide will be around the back of the boat when engines or generators are running.

Move to fresh air if you feel nausea, headache, dizziness or drowsiness.

NW-206-05

Required under AB2222 for use on all boats in the State of California

NOTICE

It is important to replace any damaged or unreadable label. Call your Boston Whaler dealer for replacement labels.

	Replacement Part No.
1 WARNING CO HELM	1811368
2 PROP 65 HANG TAG	1795087
3 DANGER CO TRANSOM	1811367
4 MAXIMUM ENGINE WEIGHT 305 LBS/138 KG	1735925
5 VESSEL CERTIFICATION PLATE	SEE FIGURE 2.2.1

Downloaded from www.Manualslib.com manuals search engine

Key to Symbols on Controls & Prints

Although not used in this manual, some of these symbols may be found on the controls, gauges, and hardware on your boat. This page is to help you understand what the symbols mean.

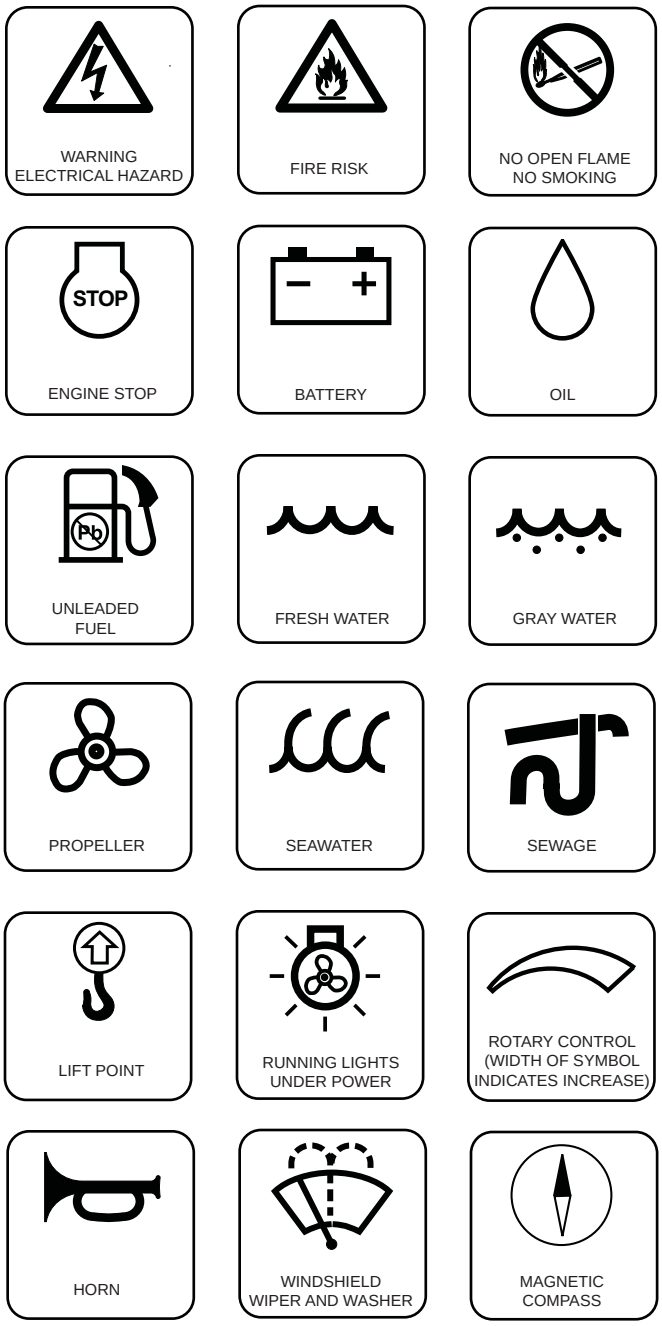

Downloaded from www.Manualslib.com manuals search engine

Construction Standards

Boston Whaler® is dedicated to creating a superior product which will provide comfort, performance, safety and dependability. All of our boats comply with the safety standards set by the United States Coast Guard and are designed, engineered and manufactured in accordance with applicable recommendations and guidelines of the American Boat and Yacht Council (A.B.Y.C.) and certified by the National Marine Manufacturers Association (N.M.M.A.).

Our Hull

Boston Whaler® hulls are constructed with our patented Unibond™ construction process. This involves foam injection into a closed mold system where the foam expands to fill all voids in the hull. When the finished product is pulled from the mold, the hull and deck are chemically bonded to form a solid, inseparable unit.

Hull Construction
Fig. 2.1.1

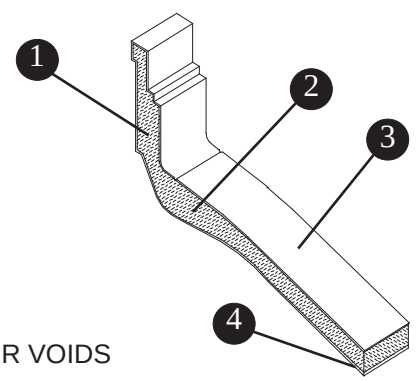

1. NO AIR VOIDS
2. HIGH DENSITY CLOSED CELL NON-ABSORBENT FOAM
3. HIGH QUALITY RESINS AND GELCOATS
4. WOVEN GLASS MATTING

Hull Identification Number

The "Hull Identification Number" is located on the starboard side of the transom.

This is the most important identifying factor and must be included in all correspondence related to your vessel. Also of vital importance are the engine serial numbers, part numbers, etc. when writing about or ordering parts for your engine.

Hull Identification Number (HIN)
Fig. 2.1.2

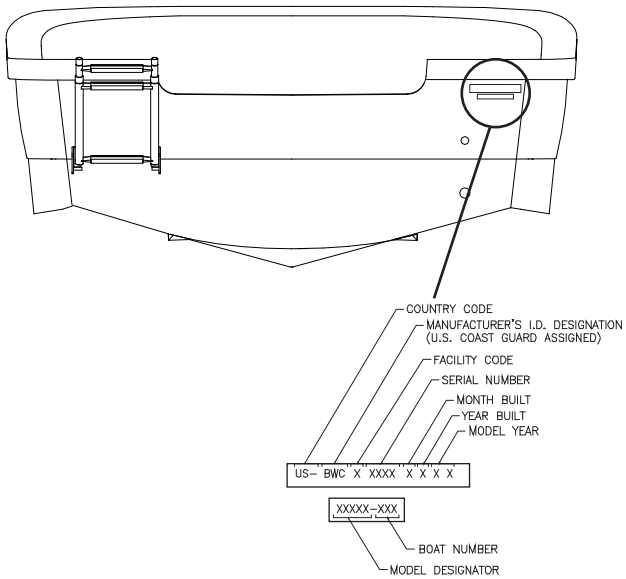

Record your HIN here:

Servicing Your Boston Whaler

When your Whaler requires service or maintenance work, it should be taken to an authorized Boston Whaler® dealer.

To find a Boston Whaler® dealer in your area call: **1-800-942-5379** (Domestic/International).

In the unlikely event that a problem is not handled to your satisfaction, discuss any warranty related problems directly with the service manager of the dealership or your sales person. Give the dealership an opportunity to help the service department resolve the matter for you.

Manufacturer's Certification

All boats must comply with federal regulations regarding maximum capacities. The certification plate (See figure 2.2.1) located on the control console indicates the maximum weight, number of persons, and horsepower your boat is rated to handle.

Downloaded from www.Manualslib.com manuals search engine

The number of persons on board must be reduced if you go out in poor weather and rough water.

The information present on the certification plate does not relieve the operator from responsibility. Use common sense and sound judgement when placing equipment and/or passengers in your boat.

- Do not load to capacity in poor weather or rough water.
- The number of seats does not indicate how many people a boat can carry, especially in poor weather and rough water.
- Above idle speed, all passengers must be seated on the seats provided.

NMMA Certification means that your Boston Whaler® has been judged by the National Marine manufacturers Association to be in compliance with applicable federal regulations and American Boat and Yacht Council standards.

A **Canada Conforming Sticker** means that your Boston Whaler® has been certified to comply with construction standards for small vessels by Transport Canada.

A **CE mark** means that your Boston Whaler® has been certified with applicable International Organization for Standardization directives.

An **Australian Builder's plate** means that your Boston Whaler® has been certified to comply with safety standards set by the National Marine Safety Committee.

⚠ DANGER

NEVER carry more weight or passengers than indicated on the certification plate, regardless of the weather or water conditions.

Certification Plates
Fig. 2.2.1

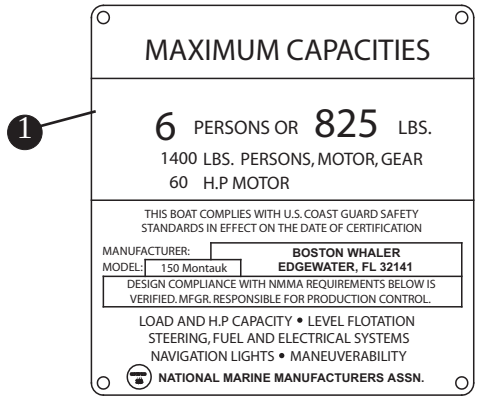

Replacement Part No. 1807946

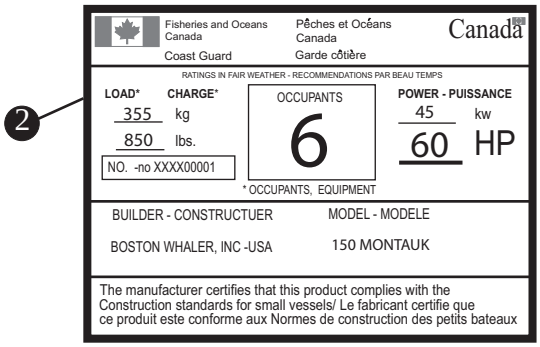

Replacement Part No. 1807948

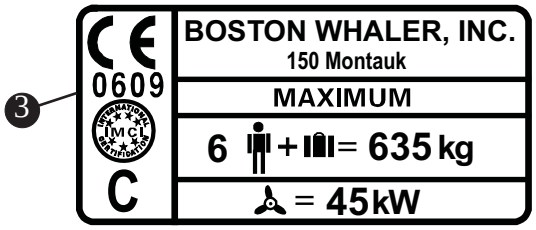

Replacement Part No. 1807947

Replacement Part No. 1850570

1. NMMA CERTIFICATE
2. CANADA CONFORMING STICKER
3. CE MARK (INT'L) BUILDER'S PLATE
4. AUSTRALIAN BUILDER'S PLATE

Downloaded from www.Manualslib.com manuals search engine

CE Certification Design Category

A (Ocean): Designed for extended voyages where conditions may exceed wind force 8 on the Beaufort scale (47 mph and above) and significant wave heights of 4 meters (13.12 feet) and above, and vessels largely self-sufficient.

B (Offshore): Designed for offshore voyages where conditions up to, and including, wind force 8 (39-46 mph) and significant wave heights up to, and including 4 meters (13.12 feet) may be experienced.

C (Inshore): Designed for voyages in coastal waters, large bays, estuaries, lakes and rivers where conditions up to, and including, wind force 6 (25-31 mph) and significant wave heights up to, and including, 2 meters (6.56 feet) may be experienced.

D (Sheltered waters): Designed for voyages on small lakes, rivers and canals where conditions up to, and including, wind force 4 (13-18 mph) and significant wave heights up to, and including, 0.5 meters (1.64) feet may be experienced.

The significant wave height is considered to be the primary factor for determining design category. Other parameters (e.g. meteorological) are descriptions of when these wave heights may be expected to occur. Refer to page 1-12 for weather information.

NOTICE

Your 150 Montauk is design category C

⚠ WARNING

It is imperative that you follow the recommendations listed on your capacity plate regarding the maximum amount of weight the boat can safely carry.

Power Capacity

The certification plate, as well as "Specifications & Dimensions" on the following page has the maximum rated power listed for your boat. **DO NOT EXCEED THIS RATING**. The various engine types offered today are more powerful and require constant maintenance to stay at optimal performance. It is required of the owner/operator to read all information regarding safety features, warning notices and maintenance schedules for continued safe operation of the engine.

The engine on the 150 Montauk has been tested and proven to be best suited for general use under normal conditions and load.

If you are re-powering your Boston Whaler®, you should pay particular attention to the maximum/minimum horsepower and maximum safe engine weight load your Boston Whaler® boat is rated for.

The 150 Montauk is designed for a <u>maximum</u> outboard engine weight of 305 LBS (138kg).

⚠ WARNING

- **DO NOT Exceed the maximum engine power rating stated on the certification plate.**
- **Use caution while accelerating. Make sure passengers are safely seated in designated areas of the boat and all gear is stowed securely.**

NOTICE

Always adjust the speed and direction of the craft to the varying sea conditions.

Downloaded from www.Manualslib.com manuals search engine

Dimensions & Clearances
Fig. 2.4.1

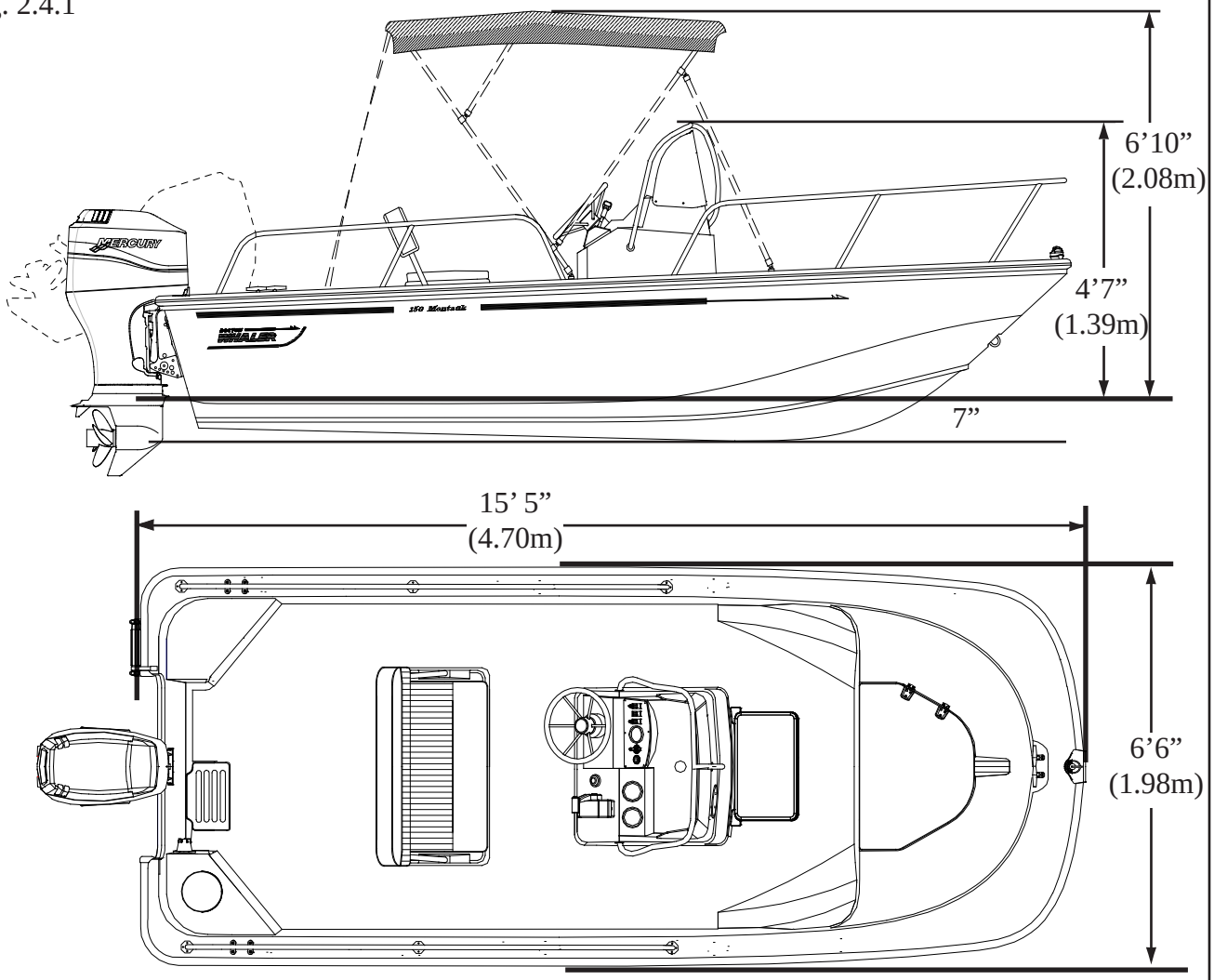

Specifications & Dimensions

(Specified measurements are approximations and are subject to variance.)

Overall Length	15’5”	4.70	m	Maximum Engine Weight	305 lbs.	138	kg
Bridge Clearance (no top)	4’7”	1.39	m	MaximumWeight,	1400 lbs	635	kg
Bridge Clearance (Sun- Top)	6’10”	2.08	m	(passengers, engine(s), gear[2])			
Beam	6’ 6”	1.98	m	Persons	6		
Boat on Trailer	6’ 5”	1.95	m	Maximum Horsepower	60 HP	44.7	kw
Draft, (Hull only)[1]	7”	.17	m	Minimum Horsepower	40 HP	29.8	kw
Weight (dry, no engine)	950 lbs.	430	kg	Fuel Capacity	13.2 gal.	49	L
Swamped Capacity	2900 lbs	1315	kg				

[1] Optional equipment and loading of the boat will affect the draft measurements. Follow the recommendations listed on your capacity plate regarding the maximum amount of weight your boat can safely carry.

[2] Exceeding this weight will affect the boat’s performance. **DO NOT** Exceed the weights listed on the capacity plate.

Downloaded from www.Manualslib.com manuals search engine

Passenger Locations

Deck Occupancy
Fig. 2.5.1

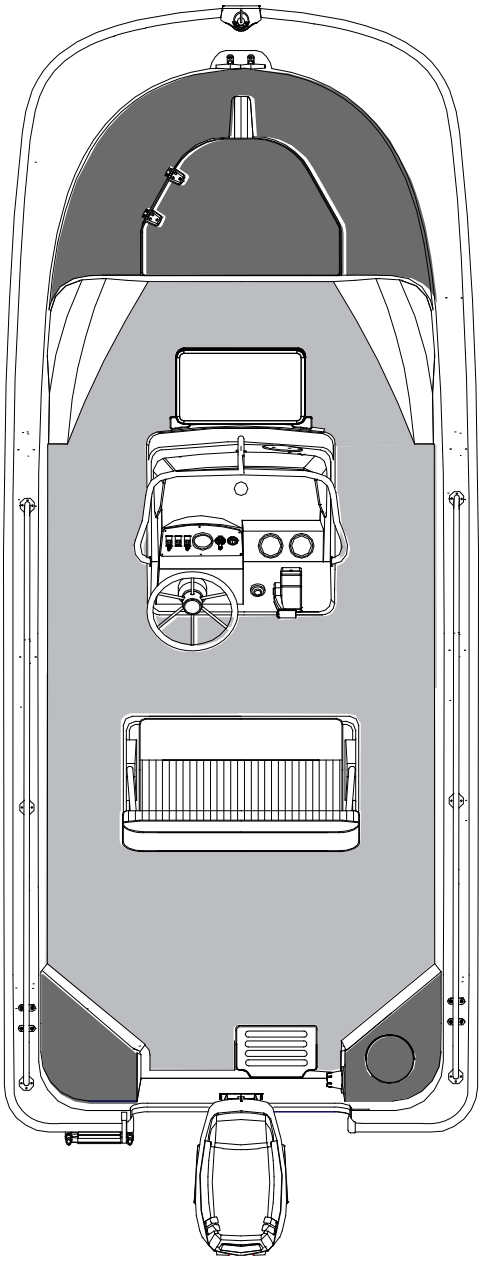

Working deck

This area is intended for occupation ONLY while mooring, anchoring, loading/unloading or when the boat is at rest. NEVER operate the engine while loading or unloading swimmers/divers from the swim platform/ladder.

Accomodation deck

This area of the boat is inside the cockpit and includes helm seating. Movement in this area should be done with extreme caution while the boat is underway. A sudden shift in boat direction can cause a loss of balance and lead to injury or death.

⚠ DANGER

Be aware of your footing while the boat is underway, slipping or falling could result in serious injury or death, especially if the boat is in motion or in rough seas. Keep the accomodation deck clean, so if movement is neccessary it will be free of obstruction.

⚠ WARNING

- **Gelcoat surfaces are slippery when wet. Use extreme caution when walking on wet surfaces.**
- **Never occupy the working decks while the boat is underway.**
- **Use care when waxing to ensure that walkways are not made dangerously slippery.**

Downloaded from www.Manualslib.com manuals search engine

Location of Thru-Hull Fittings

Through Hull Fittings
Fig. 2.6.1

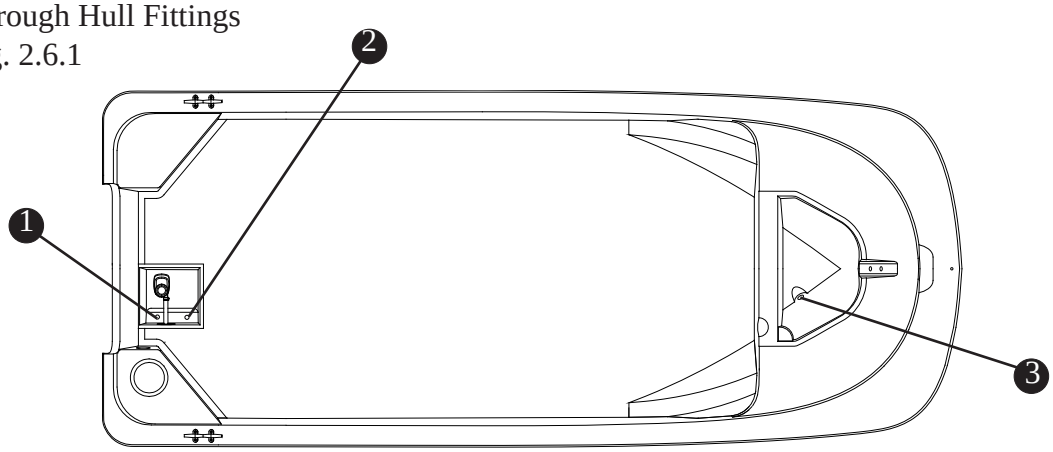

1. BILGE SUMP DRAIN
2. LIVEWELL SEACOCK (OPTION)
3. BOW LOCKER DRAIN
4. BILGE PUMP DRAIN
5. LIVEWELL DRAIN (OPTION)

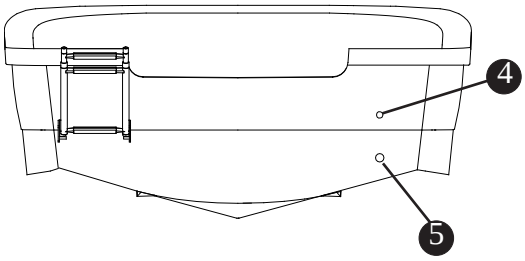

NOTICE

- **Depending on the type of boat you have, you may have underwater fittings that need drain plugs. Garboard drain plugs and fishbox drain plugs need to be in place before the boat goes into the water. Any fitting that will be underwater needs to be plugged or the seacock needs to be closed**
- **Through hull fittings should be checked for proper seal annually. When the boat is in the water the underwater fittings can be checked for dripping. It is recommended that the underwater fittings be removed, cleaned and resealed every other year.**
- **If the through hull fittings need to be replaced, it is recommended that an authorized Boston Whaler® dealer perform this type of repair. Through hull fittings that are improperly installed can cause premature hull failure and may void the Boston Whaler® limited warranty.**
- **A standard 1" "Snap-Tite" plug can be used to replace the drain plug(s) in your boat. It is recommended that you carry spare plugs to be used in the event that the drain plug(s) become lost or damaged.**

Downloaded from www.Manualslib.com manuals search engine

Features

Features
Fig. 2.7.1

1. NAVIGATION LIGHT
2. BOW CLEAT
3. CLASSIC BOW RAIL/SIDE RAIL (OPTION)
4. BOW LOCKER
5. CONSOLE
6. REVERSIBLE PILOT SEAT WITH LOCKING BACKREST
7. LIVEWELL (OPTION)
8. STERN CLEAT (P&S)
9. TELESCOPING SWIM LADDER
10. 60 ELPT EFI BIGFOOT 4-STROKE MERCURY ENGINE
11. DECK ACCESS TO BILGE PUMP
12. DECK ACCESS PLATE
13. PEDESTAL FISHING SEAT (OPTION)
14. 36 QT (34 L) COOLER WITH CUSHION AND BACKREST (OPTION)*
15. CONSOLE MOUNTED ROD HOLDERS (OPTION)*
16. FIRE EXTINGUISHER POCKET
17. TACKLE DRAWERS (OPTION)*
18. EMERGENCY ENGINE SHUTOFF SWITCH
19. GEAR SHIFT/THROTTLE CONTROL
20. CONSOLE ACCESS DOOR W/STORAGE POCKET
21. HELM SWITCH PANEL
22. ANCHOR LIGHT RECEPTACLE
23. RAYMARINE A50D GPS, CHART PLOTTER, FISHFINDER (OPTION)**
24. RAYMARINE RAY49 VHF RADIO (OPTION)

* Fishing package option
** Navigation package option

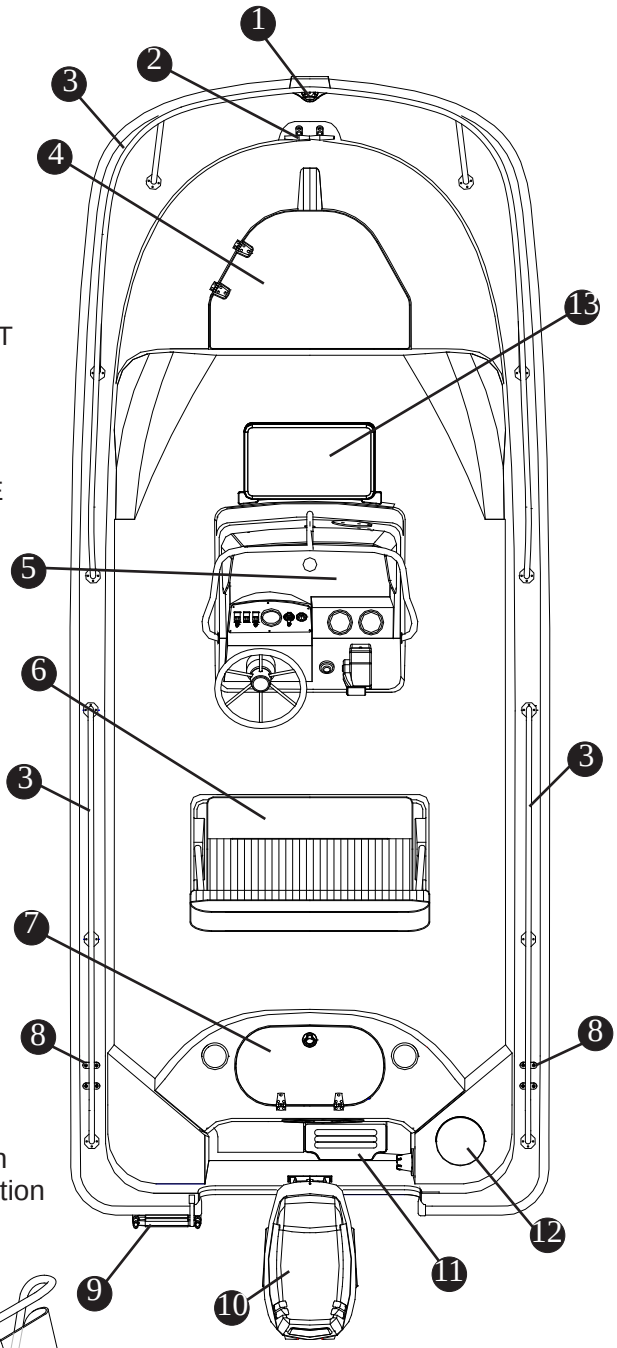

NOTE: Boat shown with bow rail and livewell options.

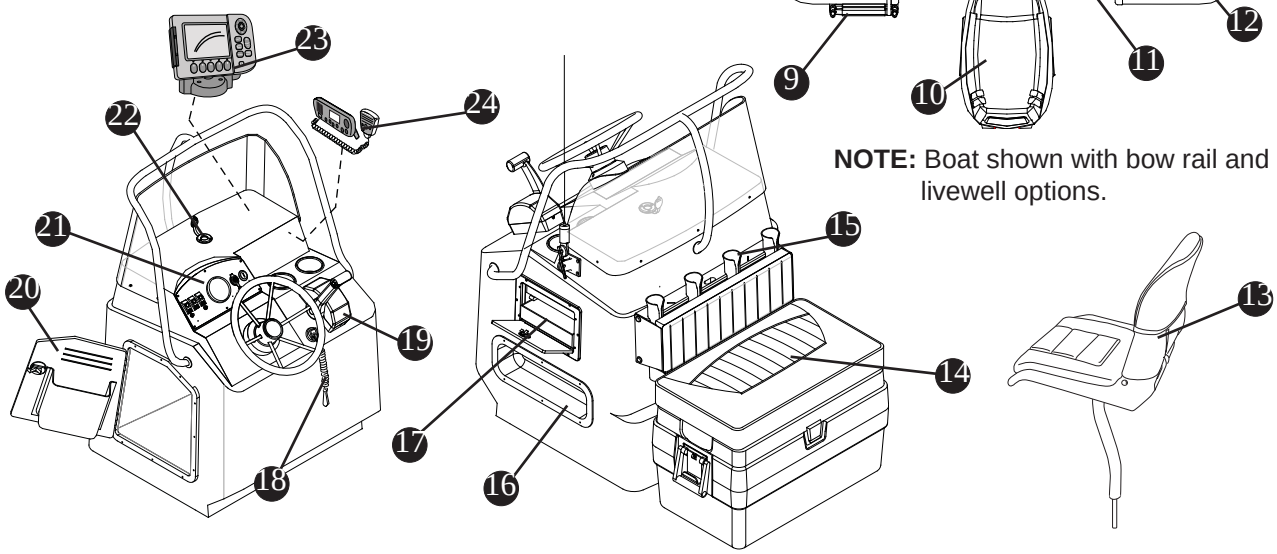

Downloaded from www.Manualslib.com manuals search engine

Control Station Switch Panel

Switch Panel
Fig. 2.8.1

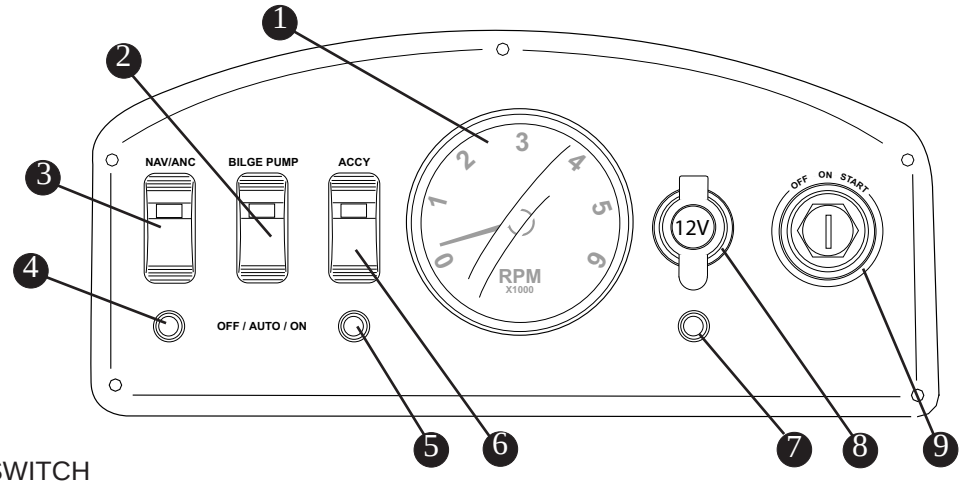

1. TACHOMETER
2. BILGE PUMP SWITCH
3. NAV/ANC LIGHT SWITCH
4. NAV/ANC BREAKER..... 5 AMP
5. ACCESSORY BREAKER..... 2.5 AMP
6. ACCESSORY SWITCH
7. 12V RECEPTACLE BREAKER ..... 10 AMP
8. 12V RECEPTACLE
9. IGNITION SWITCH

Seating & Storage

Seating and Storage
Fig. 2.8.2

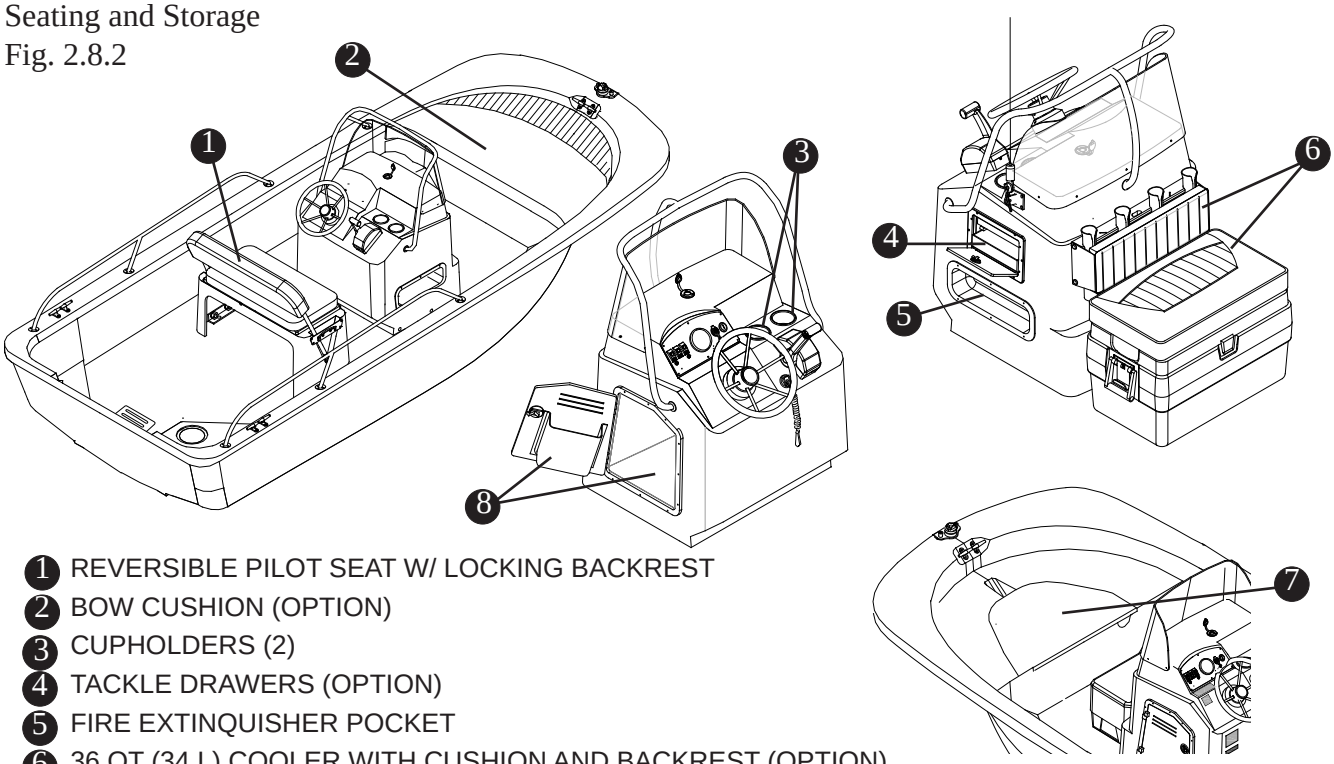

1. REVERSIBLE PILOT SEAT W/ LOCKING BACKREST
2. BOW CUSHION (OPTION)
3. CUPHOLDERS (2)
4. TACKLE DRAWERS (OPTION)
5. FIRE EXTINQUISHER POCKET
6. 36 QT (34 L) COOLER WITH CUSHION AND BACKREST (OPTION)
7. BOW/ANCHOR LOCKER
8. CENTER CONSOLE STORAGE

Downloaded from www.Manualslib.com manuals search engine

Recommended Seating

Recommended Seating & On-Plane Locations
Fig. 2.9.1

WARNING

NEVER allow passengers to ride in an area (i.e. bow, gunnels, transom, etc.) that will pose a hazard to themselves or the boat.

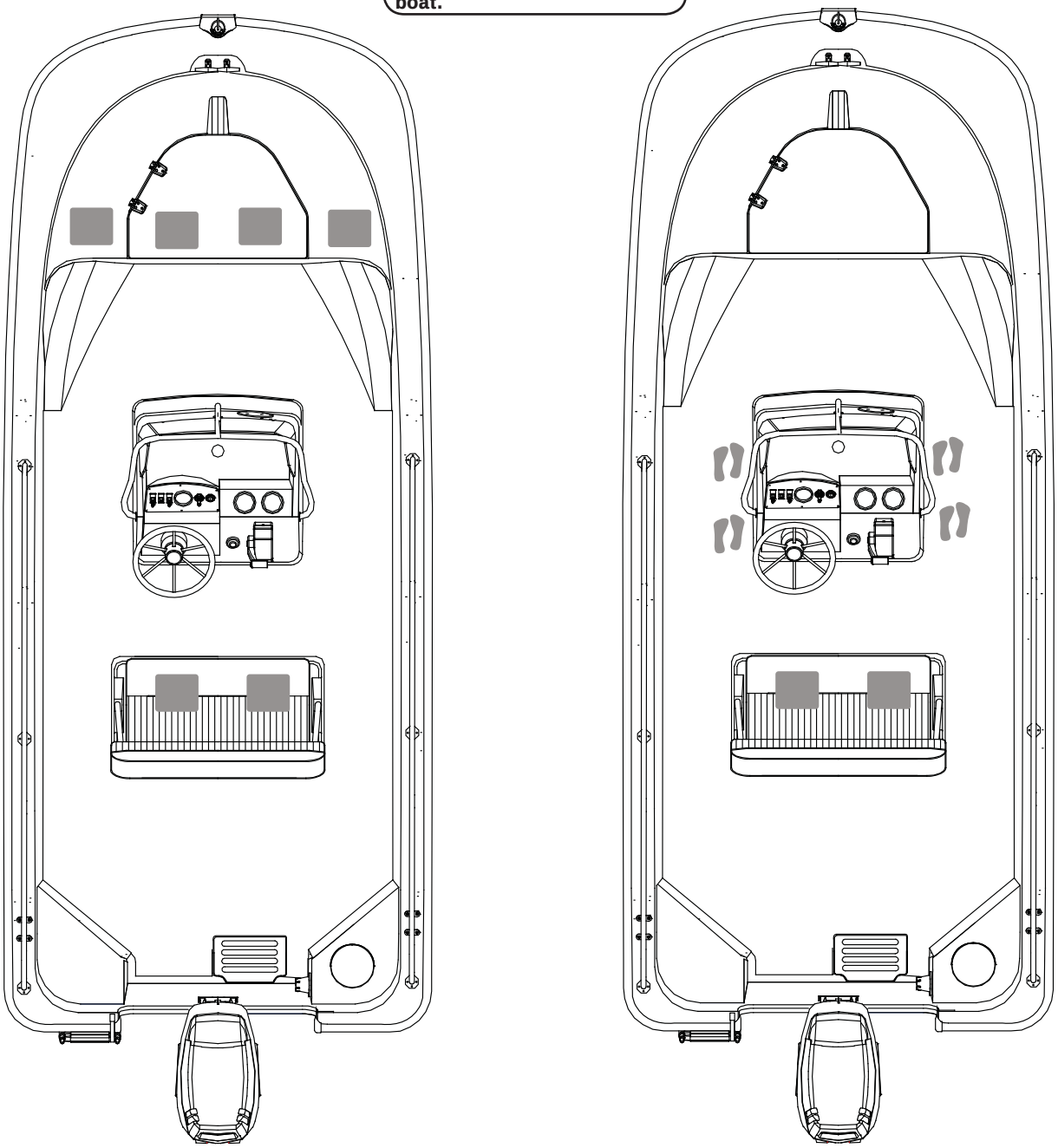

RECOMMENDED SEATING
while moored, at idle or at speed under 5 mph

RECOMMENDED ON-PLANE LOCATIONS

Downloaded from www.Manualslib.com manuals search engine

Gear Shift & Throttle Control

⚠ CAUTION

Shift controls into NEUTRAL before starting engine. Shift only when engine is at idle. Reversing at high speeds can cause flooding/ swamping due to water being pushed over the transom.

NOTICE

Wind and sea currents can change how your boat responds while in motion. Understanding your boat and its reactions at speed will make boating for you safer and more enjoyable.

The 150 Montauk is equipped with a gear shift/ throttle control unit mounted on the console directly starboard of the steering wheel. The gear shift/throttle control unit for the engine activates both shifting mechanism and throttle.

The control must be in the "NEUTRAL" position to start your engine. Neutral is the most upright position of the control unit and acts as an idle, the propeller is not rotating. There is a "throttle only" button at the center of the throttle control that when depressed will disengage the shifting mechanism and will allow you to operate the throttle without engaging the propeller. This button will automatically engage the shifting mechanism once the throttle control has been moved back to its center position (you will hear and feel a click when it is engaged). Moving the lever forward engages the forward gear and then the throttle advance.

Gear shift/Throttle
Fig. 2.10.1

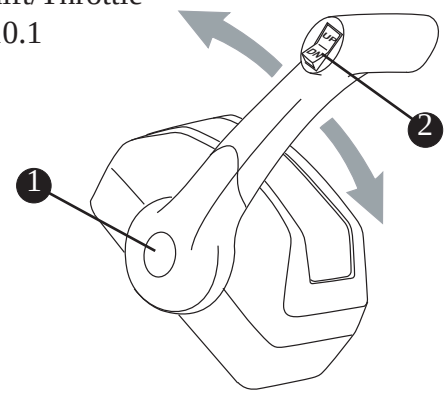

1 THROTTLE ONLY BUTTON
2 POWER TRIM SWITCH

To reverse power, bring the control lever back to engage the reverse gear and increase the reverse thrust. The throttle control regulates the RPM of the engine. Regulating the RPM of the engine will control the speed of the boat.

⚠ CAUTION

Reducing forward speed quickly, suddenly slowing the boat will create a following wake which may rise above the transom and flood the boat.

Understanding your boat and its reactions at speed will make boating for you safer and more enjoyable.

Power Trim Operation

NOTICE

Boats can be operated in a manner and speed resulting in trim angles that cause visibility to be obscurred. Motor trim, hull trim plane and speed are factors that affect a boat's trim angle.

The power trim & tilt system allows you to raise and lower the engine outdrive for trailering, launching and beaching. This also allows for ideal boat angle (in relation to the water surface) for a given load and water condition. In most cases, best all-round performance is obtained with the engine adjusted so that the boat will run at a 3° to 5° angle to the water. The power trim is located on the inboard side of the gear shift/throttle lever handle.

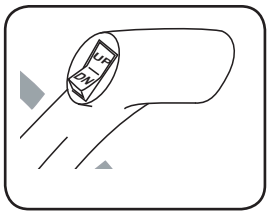

NOTICE

Boats can be operated in a manner and at certain speeds resulting in trim angles that could cause visibility to be obscured. Motor trim, hull trim plane angles (if equipped), boat load distribution and speed are factors that affect a boat's trim angle.

REFER TO THE ENGINE MANUFACTURER'S MANUAL IN YOUR OWNER'S MANUAL PACKET FOR COMPLETE INSTRUCTIONS, INFORMATION AND WARRANTY.

Downloaded from www.Manualslib.com manuals search engine

Navigation Lighting

Your boat comes equipped with navigation lighting for your safety. Regulations state that all boats, no matter the size, must display navigation lights. The lights must be displayed underway at night (sunset to sunrise) or in low visibility conditions. The term "underway" means not at anchor or docked. It is the responsibility of the operator to ensure that the navigation lights are in good working order and that the proper lighting is shown.

When operating in reduced visibility or at night it is only prudent to slow the boats speed and keep a "proper lookout". It is important that you understand navigation lights and their usage for your safety and the safety of others.

When using the canvas sun-top with the console mounted anchor light be sure to slide the light through the opening in the top of the sun-top. Be sure to remove the light pole from the base before stowing the canvas Sun-top.

When not being used, the aft pole light can be stowed in clips located on the starboard aft cockpit area.

NOTICE

When using the optional SUN-TOP, make certain that all securing straps are taut. Damage to the navigation light can happen if the canvas frame straps are loose or not secured properly.

NOTICE

The improper sequence of navigation lighting may be as dangerous as no lighting at all.

Operating the Navigation Lighting

A three-position switch, located on the console switch panel marked "NAV/ANC" (See below) controls the navigation and anchor lighting. In the "Navigation Lights" position the port (red), starboard (green) and 360° all around lights will illuminate. These lights let other vessels know the approximate size and direction of travel of your boat, depending on which lights they can see. In the "Anchor Lights" position, the white, 360° light will illuminate, showing other boaters your location while at anchor.

NAV/ANC Switch
Fig. 2.11.2

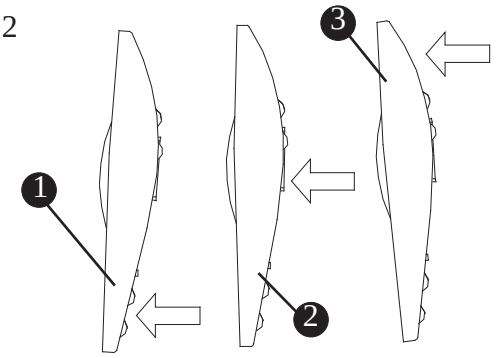

1 "OFF"
2 NAVIGATIONAL LIGHTS "ON"
3 ANCHOR LIGHT "ON"

Navigation/Anchor Lighting
Fig. 2.11.1

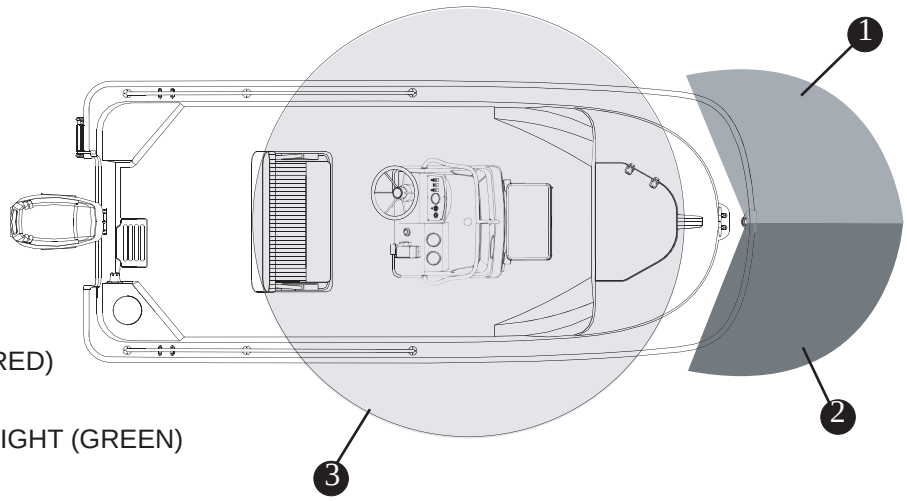

1 PORT NAVIGATION LIGHT (RED)
VISIBLE 1 NAUTICAL MILES
2 STARBOARD NAVIGATION LIGHT (GREEN)
VISIBLE 1 NAUTICAL MILES
3 360° ALL ROUND LIGHT (WHITE)
VISIBLE 2 NAUTICAL MILES

Downloaded from www.Manualslib.com manuals search engine

Steering

⚠ CAUTION

Do not cover cracks in the steering cable or fittings with tape or other sealants. This will create a hazard in which the cable can fail without warning.

Your 150 Montauk is equipped with a teleflex no-feedback steering system. The Teleflex no-feedback steering system has a clutch mechanism which prevents the engine torque from being felt at the steering wheel. This reduces driver fatigue by eliminating the constant need to fight the wheel.

Maintenance:

The mechanical steering system should be checked periodically by your Boston Whaler® dealer for proper lubrication, alignment and to make sure there is no looseness or binding of the cable. Proper maintenance of this system will ensure worry-free usage for the life of your boat.

No-feedback steering system maintenance should include the following:

- After the first few hours of operation and at regular intervals, check all fasteners and the complete steering system for security and integrity.
- Check all moving parts to be sure they are free of salt build-up and other foreign material. Such build-up will affect their operation.

Steering Pull

Steering pull is unnecessary and unsafe! Steering trim tabs provided on most engines are frequently improperly adjusted, (they work opposite to normal expectation).

To set steering trim tab for neutral steering:

There is a bolt on the underside center of the tab; loosen the bolt prior to adjustment.

If boat veers to the right, (hands off), move the aft end of the tab to the right.

If boat veers to the left, (hands off), move the aft end of the tab to the left.

Steering Trim
Fig. 2.12.1

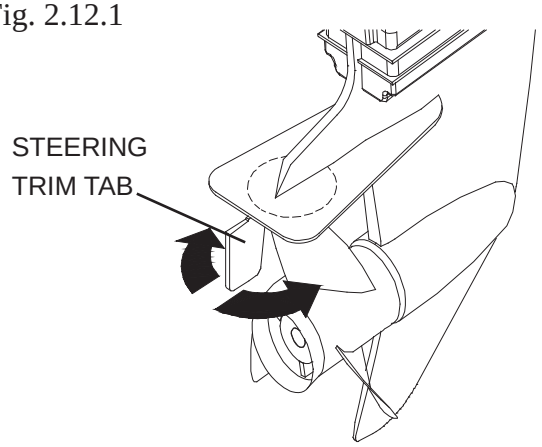

REFER TO THE ENGINE MANUFACTURER'S MANUAL IN YOUR OWNER'S MANUAL PACKET FOR COMPLETE INSTRUCTIONS AND WARRANTY.

Downloaded from www.Manualslib.com manuals search engine

Trolling Motor Panel (Option)

If equipped, the trolling motor receptacle is located at the bow of the boat. The panel is wired for 12V and includes a 12V accessory receptacle. Your boat has reinforced areas of the bow that will make it easier to mount a trolling motor. The reinforced sections are located on either side of the bow navigation light and extend back along the gunwale.The phenolic material can be drilled and tapped to hold machine screws.

There are a variety of trolling motors and mounts that can be fitted to your boat. See your Boston Whaler®dealer or talk to a reputable trolling motor dealer for the right type and size of trolling motor and battery that will work best with your boat.

When looking for a trolling motor you will need to know the distance from the top of the deck to the waterline.

In addition to the trolling motor receptacle panel, your boat will have a removable bow light (See fig. 2.13.1) which replaces the standard bow light, an additional battery box located in the console interior, plus a 40 amp breaker located on the component board in the center console which can be accessed through the door on the port side.

Trolling Motor Panel (Option)
Fig. 2.13.1

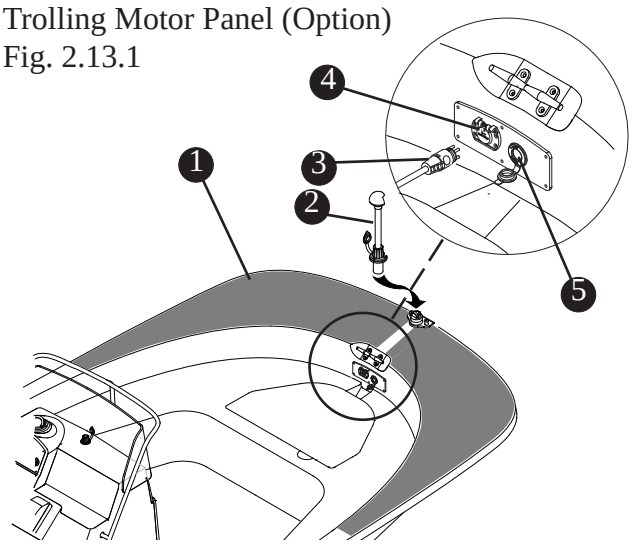

1 REINFORCED BOW
2 REMOVABLE BOW LIGHT
3 TROLLING MOTOR PLUG
4 TROLLING MOTOR RECEPTACLE
5 12 VOLT ACCESSORY RECEPTACLE

Trolling motor (Option)
Fig. 2.13.2

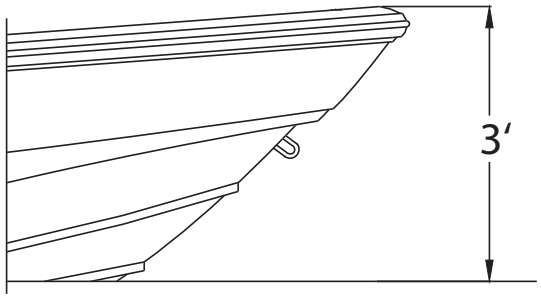

Refer to *Section 4 • Electrical System, page 4-3* for additional information regarding the trolling motor electrical hookup.

⚠ WARNING

There is a risk of electrical shock. Always have a qualified marine electrician install any system upgrades that are not already installed on your boat. There are a variety of wiring configurations up to 36Volts. Incorrect wiring will adversly affect your trolling motors performance. Always use the correct circuit protection and wire gauge when installing an upgraded trolling motor wiring system.

Battery Boxes (Option)
Fig. 2.13.3

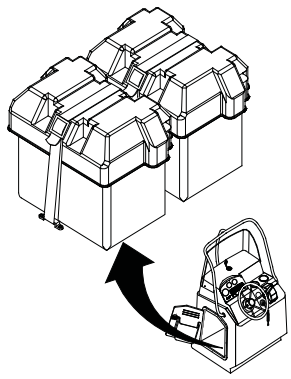

NOTICE

Refer to the Trolling Motor Owner's Manual for the correct size and type of battery.

REFER TO THE TROLLING MOTOR MANUFACTURER'S MANUAL IN YOUR OWNER'S MANUAL PACKET FOR COMPLETE INSTRUCTIONS AND WARRANTY.

Downloaded from www.Manualslib.com manuals search engine

Canvas (Option)

Chafing, fiber wear from dirt and grit and deterioration from ultraviolet light can cause your canvas sun top and covers to degrade over time.

The effects of ultraviolet light can sometimes be reduced by chemical treatment of canvas items.

Consult your Boston Whaler® dealer or check with your owner's manual before using any chemical treatments on your canvas. To keep the canvas and metal parts in good working condition and keep a good appearance, you will need to keep them clean.

The fabric should be cleaned regularly before substances such as dirt, pollen, etc. are allowed to accumulate on and become embedded in the fabric.

The fabric can be cleaned without removing the framework.

Simply brush off any loose dirt, pollen, etc. hose down and clean with a mild solution of a natural soap in lukewarm water (no more than 100 ° F. 38° C.). Rinse thoroughly to remove soap.

NOTICE

The sun-top canvas must be secured in the canvas boot before trailering. NEVER TRAILER THE CANVAS SUN-TOP IN THE OPEN POSITION.

Allow the canvas to completely air-dry. After each use especially in salt water areas, rinse the canvas completely with fresh cold water. Let the canvas dry completely before stowing. All metal components of the canvas frame should be rinsed with fresh cold water and exposed components wiped dry to maintain appearance and working order.

Lubricate the snaps of the canvas with petroleum jelly, use a parafin wax on the zippers to keep them in proper working order. If you have stubborn cleaning cases call your Boston Whaler® dealer for proper cleaning procedures.

Do not use bleach or solvents to clean the canvas material.

Canvas (Option)
Fig. 2.14.1

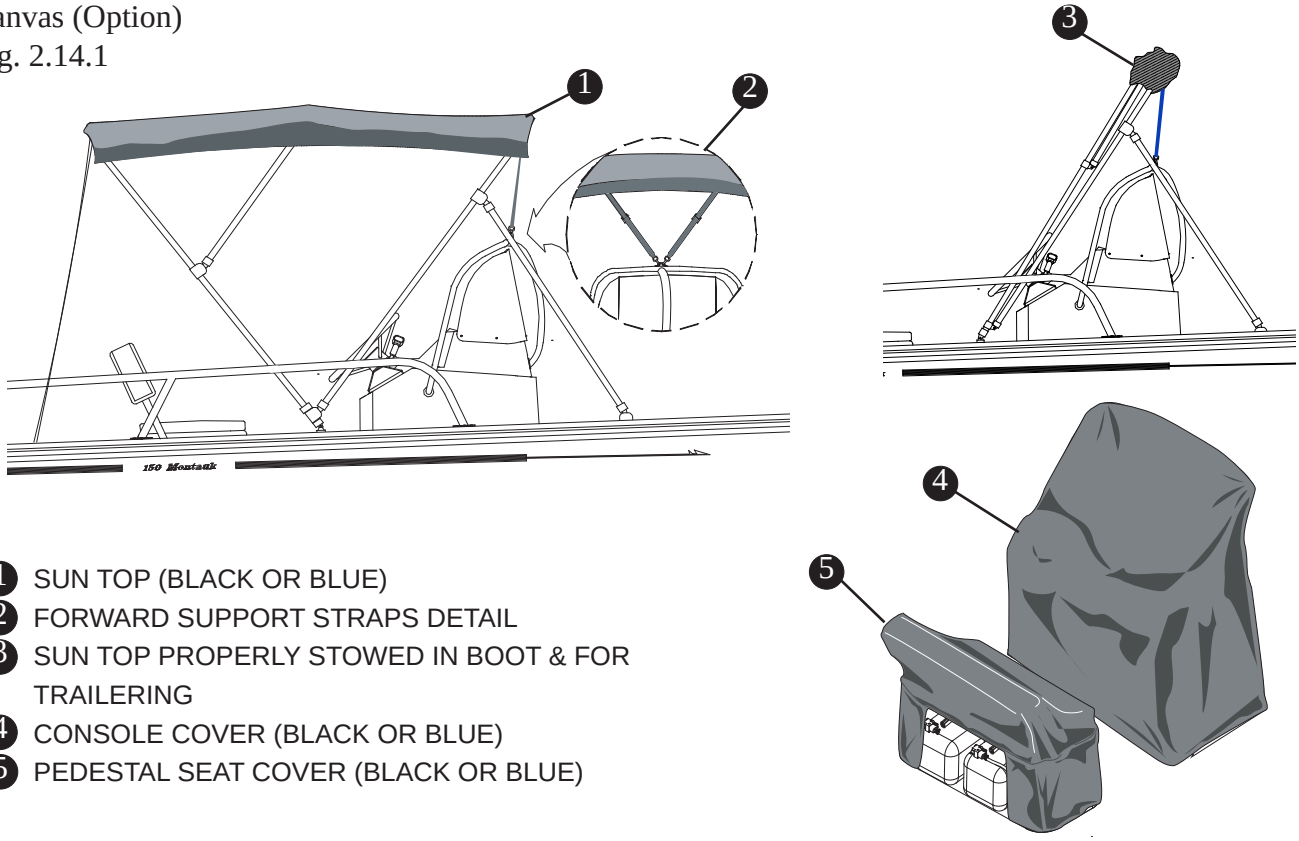

1. SUN TOP (BLACK OR BLUE)
2. FORWARD SUPPORT STRAPS DETAIL
3. SUN TOP PROPERLY STOWED IN BOOT & FOR TRAILERING
4. CONSOLE COVER (BLACK OR BLUE)
5. PEDESTAL SEAT COVER (BLACK OR BLUE)

Downloaded from www.Manualslib.com manuals search engine

Propeller

NOTICE

- **It is advised that you always carry a spare propeller, propeller hardware and propeller wrench on board. Should your propeller become damaged it can then be easily replaced.**
- **Under no circumstance should you use a propeller which allows the engine to operate at a higher than recommended RPM.**
- **changes to the boat, such as the addition of bottom paint, additional equipment, etc. will affect performance.**

The engine on your 150 Montauk has been equipped with a propeller which our tests have shown to be best suited for general use under normal conditions and load. In some situations you may wish to change the propeller to give your boat slightly different performance characteristics.

Propellers have two basic characteristics, diameter and pitch.

Diameter is that distance measured across the propeller hub from the outer edge of the 360º that is made by the propeller's blade during a single rotation.

Pitch is that distance in inches that a propeller will travel if rotated one revolution without any slippage.

Propeller Pitch & Diameter
Fig. 2.15.2

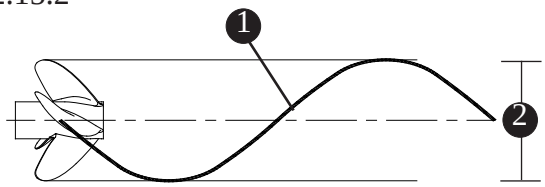

1 PITCH
2 DIAMETER

In general, changing to a lower pitch propeller will increase acceleration and load pulling capability, with a slight decrease in top end speed. If you choose to change propellers, the type should be discussed with your Boston Whaler® dealer. All propellers are designed to provide maximum forward thrust, consequently, the reverse thrust of the propeller will not be as efficient.

⚠ DANGER

Disconnect power by moving the battery switch to the "OFF" position prior to removing the propeller.

Propeller Assembly
Fig. 2.15.1

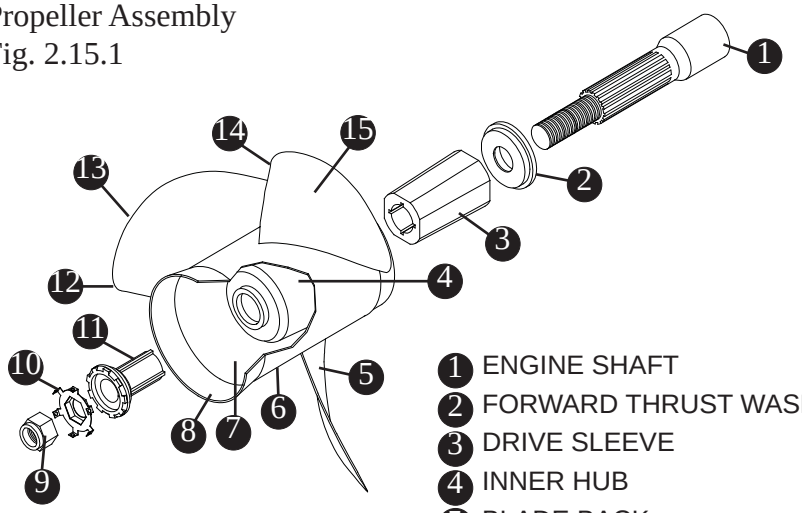

1 ENGINE SHAFT
2 FORWARD THRUST WASHER
3 DRIVE SLEEVE
4 INNER HUB
5 BLADE BACK
6 OUTER HUB
7 EXHAUST PASSAGE
8 DIFFUSER RING
9 PROP NUT
10 LOCK RING
11 DRIVE SLEEVE ADAPTER
12 BLADE TIP
13 LEADING EDGE
14 TRAILING EDGE
15 BLADE FACE

Downloaded from www.Manualslib.com manuals search engine

Docking, lifting and trailering

Cleat Locations
Fig. 2.16.1

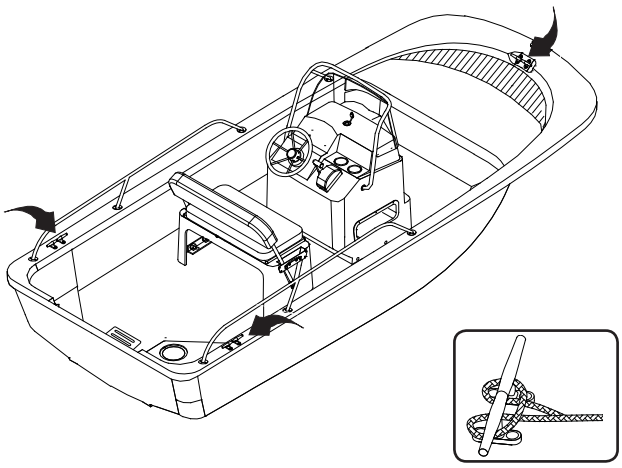

Docking

Your 150 Montauk has (3) 8 inch cleats, One at the bow and two located at the sternm, one port and one starboard. The cleats are used to secure the boat to the dock while loading/unloading or mooring. Please learn the proper way to secure the boat and how best to use the mooring points of your boat.

Figure 2.16.2 shows the correct method for tieing a belaying knot, commonly used to secure a boat to a dock. This knot will hold fast and is simple to release when needed.

Belaying Knot
Fig. 2.16.2

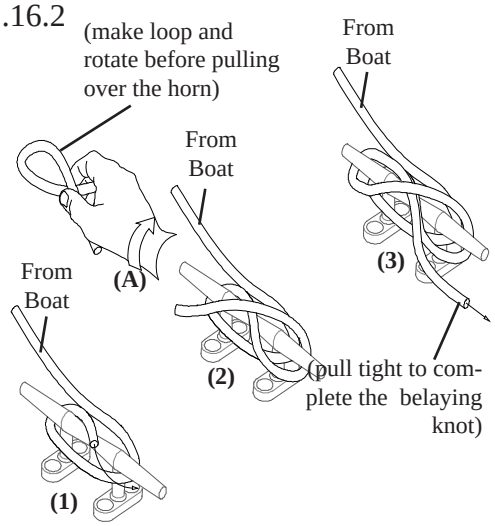

Lifting

⚠ DANGER

Use only the lifting points specified. Using the cleats for lifting is dangerous and could cause serious injury or death.

The bow eye is used to haul out and hold your boat onto a trailer. The stern eyes are used as tie down points while trailering the boat. The bow and stern eyes may be used only for short term lifting of the boat. **Long term lifting with bow and stern eyes can cause stress on the fiberglass and gel coat**

For long term lifting or storage, use flat, wide belt-type slings and spreaders long enough to keep pressure from gunwales. DO NOT place slings where they may lift on underwater fittings.

⚠ CAUTION

Long term lifting with the bow and stern eyes or lifting with the bow locker eyelet can cause stress on the fiberglass and gel coat and is not recommended.

Proper Short Duration lifting
Fig. 2.16.3

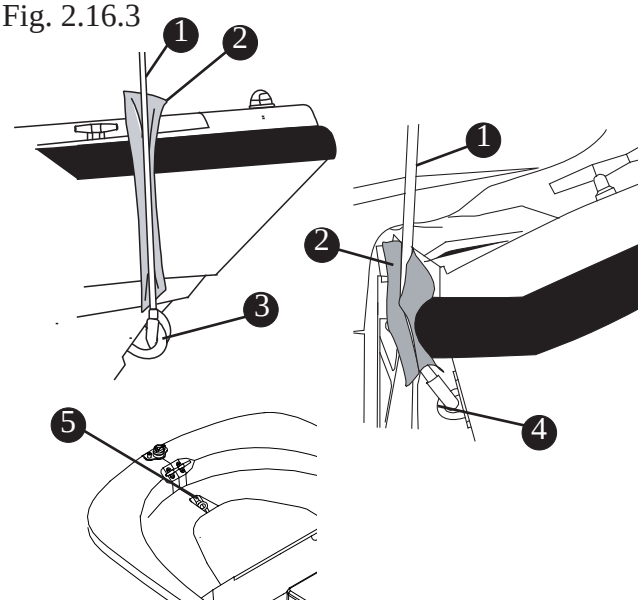

1. LIFT CABLE
2. CHAFING PROTECTION
3. BOW EYE
4. STERN EYE (P&S)
5. BOW LOCKER/ANCHOR EYE
   (DO NOT LIFT BOAT FROM THIS POINT)

Downloaded from www.Manualslib.com manuals search engine

Whether you are lifting your boat out of the water for routine maintenance or long term storage, consider the following:

- If you are using a professional lifting service, it is prudent to check all credentials and ask for proof of insurance to protect your investment.
- Use a wide, flat, belting sling for lifting ,to minimize stress on the gunwales. Careful location of the sling is required. DO NOT PLACE SLINGS WHERE UNDER WATER FITTINGS WILL BE IN CONTACT.
- If using a lifting hook, attach to bow eye and the stern lifting eyes mounted on the transom.

  Always use a spreader bar on the stern eyes and use chafing protection on the top of the transom.
- All drain plugs (i.e. transom, fishwell, deck, etc.) should be pulled out and the boat positioned with the bow slightly higher than the stern so that any water which is allowed to accumulate in the cock pit and/or bilge can easily drain from the boat.

Trailering

The 150 Montauk is equipped with a galvanized trailer which is best suited for length and width of the boat.

If you have a trailer or plan on purchasing a trailer separately, there are some points you need to consider, such as:

- Having a center roller and keel guards will help provide good support for the keel, also provide good fore and aft support.
- Trailers equipped with rollers instead of bunks can damage the foam sandwich hull of your boat and should never be used.
- Bunks provide a more even weight distribution.

NOTICE

Your warranty may be void if you use a trailer with rollers. Use a trailer with bunks ONLY

Trailer Safety

Securing the Boat to the Trailer

Safety Chain/Cable - There is a safety chain/cable that attaches to the bow eye and will keep the boat from sliding off the trailer in the event that the winch strap or cable breaks. Hook this up first.

Tie-Down Straps - Can be used to secure the boat from the stern. The tie-down straps hook into the tie-down loops on the trailer frame and to the stern eyes on the transom. Padding (or similar) chafe protection should be used wherever the tie-down straps come in contact with the hull.

Securing the Trailer to the Tow Vehicle

Safety Chains/Cables - Safety chains/cables are also important; the chains/cables are connected to the trailer and should be of sufficient length to reach the frame of the tow vehicle and should be long enough to allow the tow vehicle to turn without binding or tensioning. Attach the chains/cables by crisscrossing them under the tongue of the trailer and then attaching them to the tow vehicle.

Trailer Hitch - A properly matched trailer hitch ball and coupler is important. Make certain that the coupler and the hitch ball are properly seated and locked.

The trailer features a unique “swing tongue” (See figure 2.18.1). Be sure that the pin is in place and the hairpin cotter is inserted to prevent the pin from backing out while pulling the trailer.

⚠ DANGER

Tie-down straps should never be used by themselves, they are only used to help in keeping the boat secured to the trailer. Make certain that the safety chain is properly secured to the bow eye.

Downloaded from www.Manualslib.com manuals search engine

Trailering the Engine

It is best to trailer your boat with the outboard tilted down in a vertical operating position.

However, if additional road clearance is required due to railroad crossings, driveway clearance, trailer bounce, etc., the outboard should be tilted up and supported using an accessory outboard support device.

Your Boston Whaler® dealer will have recommendations regarding the support of your engine.

⚠ CAUTION

DO NOT rely on the power trim/tilt system or tilt support lever on your outboard to maintain proper ground clearance for trailering. THE OUTBOARD TILT SUPPORT LEVER IS NOT INTENDED TO SUPPORT THE OUTBOARD FOR TRAILERING

NOTICE

Refer to the engine manual in your owner's manual packet for proper engine support while trailering.

Trailer description

Single Axle Bunk Trailer
Fig. 2.18.1

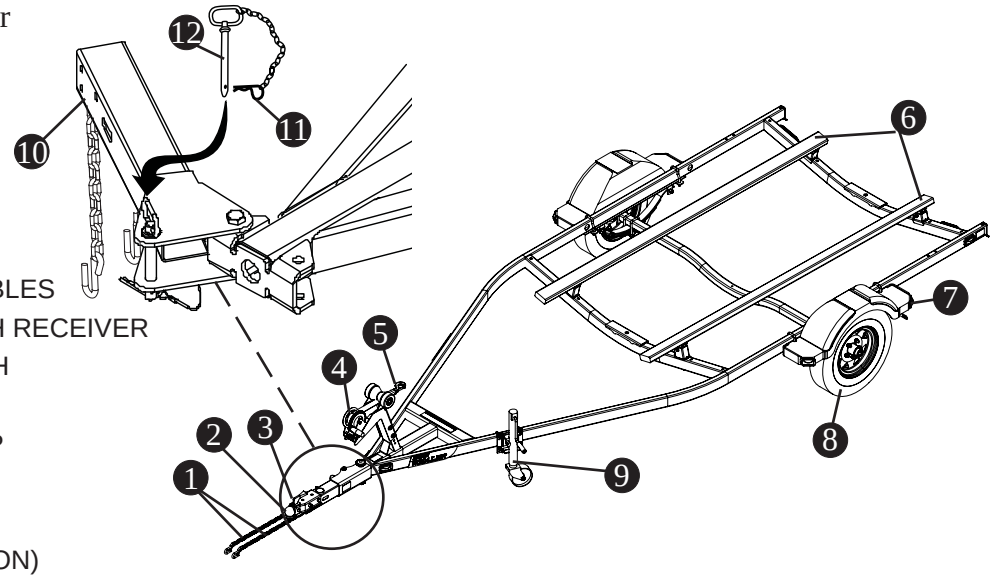

1. SAFETY CHAINS/CABLES
2. TONGUE/BALL HITCH RECEIVER
3. TONGUE BALL LATCH
4. WINCH
5. WINCH HOOK/STRAP
6. BUNKS
7. TAIL LIGHT (P&S)
8. RADIAL TIRES (OPTION)
9. TONGUE JACK
10. SWING TONGUE
11. COTTER PIN
12. REMOVABLE PIN

⚠ CAUTION

NEVER use a hitchball and coupler that are not matched.
DO NOT secure the safety chains to the bumper of the tow vehicle.

Downloaded from www.Manualslib.com manuals search engine

Bilge Pump

The bilge pump located under a hatch in the aft cockpit deck is rated at 500 GPH (1893 LPH). The pump is activated automatically by a float switch when the water in the bilge reachs a predetermined level.

A switch on the console switch panel labeled BILGE PUMP (See figure 2.8.1) controls the operation of the pump. The switch should remain in the AUTO position while in use, unless the operator wishes to manually operate the pump by depressing the switch to the ON position.

Bilge Pump Switch
Fig. 3.1.1

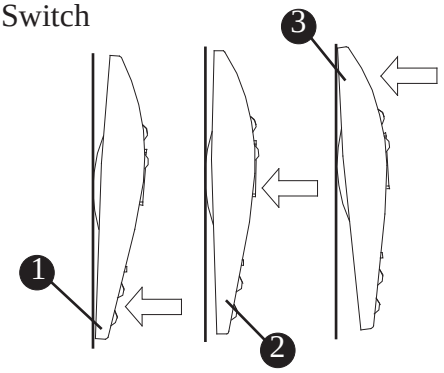

1. "OFF"
2. BILGE PUMP "AUTO"
3. BILGE PUMP "ON"

NOTICE

The bilge pump is wired directly to the battery. Therefore it is imperative that the float switch remain clear of debris to prevent continuous operation and subsequentdischarge of the battery.

Bilge Pump
Fig. 3.1.2

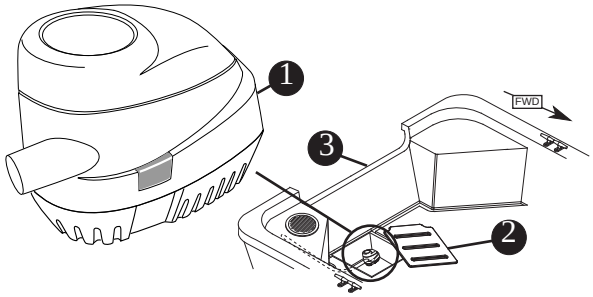

1. BILGE PUMP (500 GPH/1893 LPH)
2. BILGE ACCESS COVER
3. TRANSOM

Bilge Pump Maintenance
Fig. 3.1.3

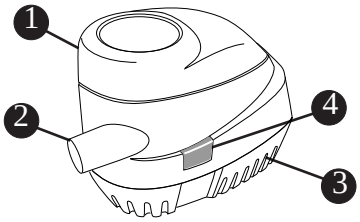

1. BILGE PUMP (500 GPH/1893 LPH)
2. OUTLET
3. WATER INTAKE
4. LOCKING TAB (ON EACH SIDE)

Maintenance

Frequently inspect the area under the float switch to ensure it is free from debris and gummy bilge oil. To clean, soak in heavy duty bilge cleaner for 10 minutes, agitating several times. Check for unrestricted operation of the float. Repeat the cleaning procedure if necessary.

Inspect the bilge pump intakes and keep them free of dirt or material which may impede the flow of water through the pump.

To clean the pump strainer, depress the lock tabs on both sides of the pump and lift the pump motor.

If water does not come out of discharge hose:

1. Remove the motor module to see if the impeller rotates with the power on.
2. Remove any debris that may have accumulated in the nozzle section or strainer base.
3. Check hose and connection on hull side for debris and proper connections.

Fuel & Oil Spillage

Regulations prohibit discharging fuel or oily waste in navigable waters. Discharge is defined as any action which causes a film, sheen or discoloration on the water surface, or causes a sludge or emulsion beneath the water surface. A common violation is bilge discharge. Violators are subject to severe penalties

Downloaded from www.Manualslib.com manuals search engine

and may also be responsible for the cost of clean up, which can be substantial.

Use rags or sponges to soak up fuel or oily waste, then dispose of them properly ashore. If there is a large quantity of fuel or oil in the bilge, contact a knowledgeable marine service to remove it. Never pump contaminated bilge discharge overboard.

Avoid fuel spills by filling the portable fuel tanks less than rated capacity, allowing for fuel expansion.

Fuel System

NOTICE

Fuel tanks should never be filled to capacity. Allow 2% for expansion.

The 150 Montauk is equipped for a gasoline fuel system. There are a pair of 6.6 Gal.(24.5 L) removable fuel tanks located under the reversible pilot seat for a total fuel capacity of 13.2 gal (49 L). Straps are used to secure the tanks to the deck. There is a rigging tube under the deck for running the fuel line to the engine. It is recommended that you follow all instructions regarding the filling and transporting of the removable fuel tanks.

⚠ CAUTION

Use of improper fuel can seriously damage your engine. Engine damage resulting from use of improper fuel is considered misuse of engine and will void the warranty. Follow engine manufacturer's recommendations regarding the types of fuel and oil to use.

⚠ CAUTION

Be sure fuel tanks are secured to the deck while underway.

A fuel tank with levels less than 1/4 full can cause engine stalling problems due to fuel starvation or by allowing sediment and dirt to enter the fuel supply lines. Keep the tank full and monitor the fuel level often to prevent this from happening.

NOTICE

Remove portable tanks from boat and fill from shore. When fueling is complete, secure tanks to deck with straps provided.

Fuel tanks
Fig. 3.2.1

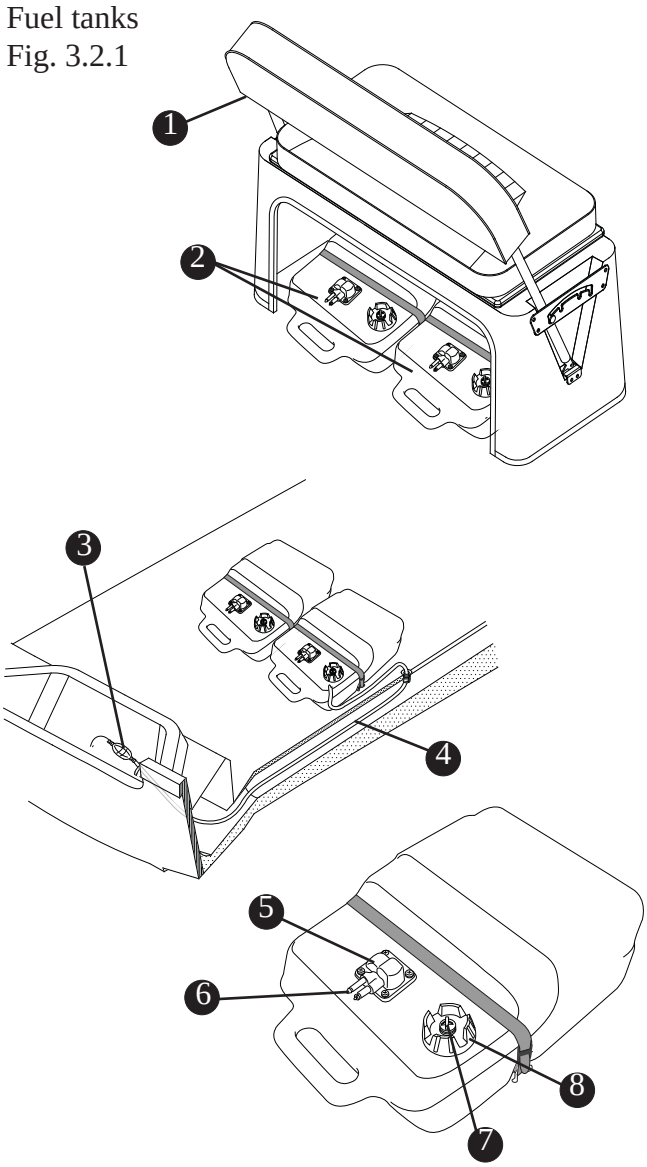

1. PEDESTAL SEAT
2. 6.6 GAL (24.5 L) FUEL TANKS (2)
3. PRIMER BULB
4. FUEL FEED TO ENGINE
5. FUEL TANK LEVEL GAUGE
6. FUEL LINE RECEPTACLE
7. FUEL VENT
8. FULL FILL

Downloaded from www.Manualslib.com manuals search engine

Primer Bulb

Use the primer bulb (See figure 3.2.1) to draw fuel from the tank(s) to the engine when connecting the portable tank or when fuel has been drained from the system. There are instructions regarding proper use of the primer bulb in the engine manufacturers handbook.

Static Electricity and the Fuel System

⚠ DANGER

- **Static electricity can ignite gasoline vapors causing serious injury or death and/or destruction of property.**
- **Check for leaks in tubing, connections and hoses. Avoid all forms of ignition when the odor of fuel is noticed.**

  Correct the cause of the leaks and ventilate the area to insure that no fumes remain prior to energizing any electrical equipment, smoking and/or starting the engines.

There is a danger that static electricity can ignite gasoline vapors that have not been ventilated outside an enclosed area. Use extreme caution when fueling your boat from a source outside the regular venues, (e.g. marinas, fuel service stations).

Your boats bonding system protects it from creating and discharging static electricity. Your boat must be in contact with the water or a land based grounding system. The following suggestions will help keep you safe from static electricity while refueling your boat.

Your boat has safety features that can be circumvented by not adhering to standard fueling practices.

- **NEVER** fuel your boat in unsafe conditions such as suspended on a sling or in a situation that increases the liklihood of static discharge.
- **NEVER** use homemade containers to fill your fuel tanks.

⚠ CAUTION

- **Oil and fuel spills can be dangerous and can subject offenders to severe penalties**
- **Leaking fuel is a fire and explosion hazard, inspect the system regularly. Examine fuel tanks and exposed lines for leaks and corrosion.**

NOTICE

it is your responsibility to read and understand the engine manufacturer's manual in your owner's manual packet for complete fuel and fueling information and warnings.

- Fuel carried on-board outside of a fixed fuel system should be stored in an approved container or in a portable tank such as provided for outboard engines and be stowed safely outside of the engine or living compartment(s).
- Shut down the engine, motors and fans prior to taking on fuel. Any ignition sources should be extinguished before filling the fuel tank.
- Close all ports, windows, doors and hatches.
- Fueling should never be done at night except in well-lighted areas.
- Always keep the fuel nozzle in contact with the fuel fill plate or the edge of the fuel tank opening throughout the filling process.
- Allow areas where gasoline vapors could collect to be ventilated before starting the engine.
- Wipe any spillage completely and dispose of rags or waste on shore.
- Secure the fill cap tightly.
- Portable tanks should only be filled while on shore, never on board the boat.

REFER TO THE **"DO'S AND DON'TS AT THE GAS PUMP"** DVD IN YOUR OWNER'S MANUAL PACKET FOR MORE INFORMATION.

Downloaded from www.Manualslib.com manuals search engine

Ethanol-Blended Fuels

Ethanol is an oxygenated hydrocarbon compound that has a high octane rating and therefore is useful in increasing the octane level of unleaded gasoline.

NOTICE

The use of improper gasoline or additives can damage your fuel system and is considered misuse of the system. Damaged caused by improper gasoline or additives WILL NOT be covered under warranty.

The fuel-system components of your Mercury engine(s) have been tested to perform with the maximum level of ethanol-blended gasoline (10% ethanol) currently allowed by the EPA in the United States.

Special precautions should be considered with the use of fuel containing ethanol in your system. Fuels with ethanol can attack some fuel-system components, such as tanks and lines, if they are not made from acceptable ethanol-compatible materials. This can lead to operational problems or safety issues such as clogged filters, leaks or engine damage.

Your boat was manufactured, and shipped from the factory, with ethanol-compatible materials. Before introducing gasoline with ethanol into your fuel tank, ask your dealer if any components have been added or replaced that are not recommended by Boston Whaler, Mercury or may not be ethanol-compatible.

Filling The Tank

It is best to maintain a full tank of fuel when the engine is not in use. This will reduce air flow in and out of the tank due to changes in temperature as well as limiting exposure of the ethanol in the fuel to humidity and condensation.

⚠ CAUTION

The use of fuels containing ethanol higher than 10 percent (E-10) can damage your engine and/or fuel system and will void the warranty.

E85 FUELS COULD SERIOUSLY DAMAGE YOUR ENGINES AND MUST NEVER BE USED.

Example of Phase Separation
Fig. 3.4.1

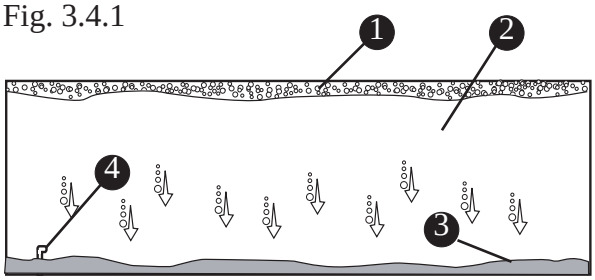

1. CONDENSATION
2. UPPER PHASE (WATER+FUEL+ETHANOL)
3. LOWER PHASE (WATER+ETHANOL)
4. FUEL INLET TO ENGINE

Phase Separation

Humidity and condensation create water in your fuel tank which can adversly effect the ethanol blended fuel. A condition called phase separation can occur if water is drawn into the fuel beyond the saturation point. The presence of water in the fuel beyond the saturation level will cause most of the ethanol in the fuel to separate from the bulk fuel and drop to the bottom of the tank, significantly reducing the level of ethanol in the fuel mixture in the upper level (phase). If the lower level (phase), consisting of water and ethanol, is deep enough to reach the fuel inlet, it could be pumped directly to the engine(s) and cause significant problems. Engine problems can also result from the reduced ethanol/fuel mixture left in the upper phase of the tank.

Additives

There is no practical additive known that can prevent or correct phase separation. The only solution is to keep water from accumulating in the tank.

If phase separation does occur, your only remedy is to drain the fuel, clean and dry the tank completely and refill with a fresh, dry load of fuel.

Fuel Filters

Mercury already provides the appropriate level of filtration to protect the engine from debris. The addition of another *in-line* filter to the system will

Downloaded from www.Manualslib.com manuals search engine

create a possible flow restriction that can starve the engine(s) of fuel.

As a precaution, it is advisable to carry extra *on-engine* filters in case filter plugging from debris in the fuel tank becomes a problem during boating.

Maintenance

Periodically inspect for the presence of water in the fuel tank. If any is found, all water must be removed and the tank completely dried before refilling the tank with any fuel containing ethanol.

Storage

Fuel Systems with Portable tanks:

Most portable fuel tanks have closable vents. Close the vent while in storage to prevent air from entering the tank.

Long periods of storage and/or non-use, common to boats, create unique problems. When preparing to store a boat for extended periods, of two months or more, it is best to completely remove all fuel from the tank(s).

A partially full tank is not recommended because the void space above the fuel allows air movement that can bring in water through condensation as the air temperature moves up and down. This condensation could potentially become a problem.

⚠ CAUTION

- **Oil and fuel spills can be dangerous and can subject offenders to severe penalties**
- **Leaking fuel is a fire and explosion hazard, inspect the system regularly. Examine fuel tanks and exposed lines for leaks and corrosion.**

NOTICE

it is your responsibility to read and understand the engine manufacturer's manual in your owner's manual packet for complete fuel and fueling information and warnings.

REFER TO THE ENGINE MANUFACTURER'S MANUAL IN YOUR OWNER'S MANUAL PACKET FOR COMPLETE INSTRUCTIONS AND WARRANTY.

Starting the Engine

⚠ CAUTION

NEVER start or operate your engines (even momentarily) without water circulating through all the cooling water intake holes in the gearcase to prevent damage to the water pump (running dry) or overheating of the engine.

Prior to Starting

- Operator should know boating safety, safe navigation, and boat operating procedures.
- Make sure that the lower unit of the engine is in the water.
- Be sure the emergency engine shutoff switch (See figure 1.14.1) is in the "RUN" position.

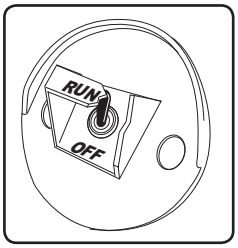

- Be sure gear shift and throttle control levers are in the NEUTRAL position.

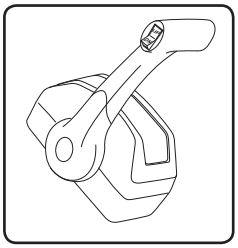

NOTICE

The gear shift/throttle control levers will not allow engine starting if the control levers are in any other position than NEUTRAL.

- If equipped, make sure the battery switch is turned "ON".

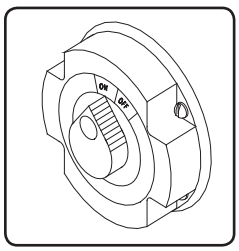

Downloaded from www.Manualslib.com manuals search engine

Ignition Switch
Fig. 3.6.1

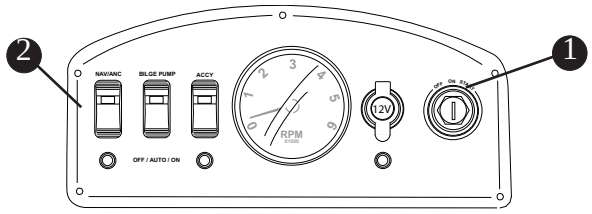

1 IGNITION SWITCH
2 CONSOLE SWITCH PANEL

Start Engine:

- Turn key to "Start" position and hold until engine starts.

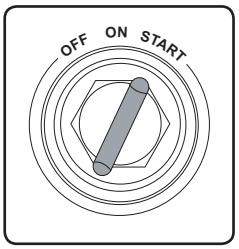

- When engine starts, release key. The key will return to the "ON" position.

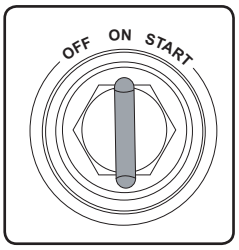

Warming Up the Engine

The "THROTTLE ONLY" button on the gear shift/ throttle control allows the operator to increase engine RPM for warm-up without shifting the engines into gear.

- Be sure that the gear shift and throttle control handle is in the NEUTRAL position.

- Press and hold the "THROTTLE ONLY" button while moving the control handle ahead to the forward position.

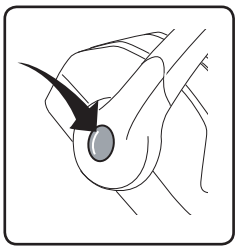

- Advance the control handle to increase engine RPM.

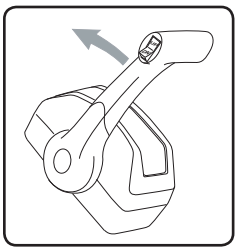

NOTE: Engine RPM is limited to prevent engine damage.

- To disengage, return the control handle back to the neutral position.

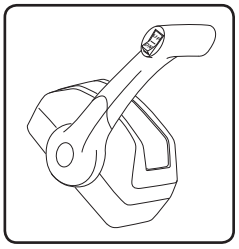

The warm-up mode can be re-activated by turning the engine off and re-starting.

Stopping the Engine

- Be sure that the gear shift and throttle control handle is in the NEUTRAL position

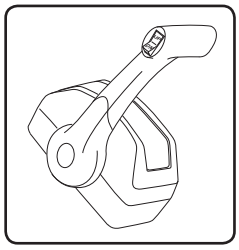

- Turn Key to the "OFF" position.

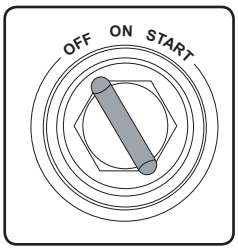

- If equipped, turn the battery switch "OFF".

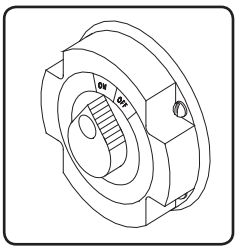

⚠ CAU-TION

NEVER turn the battery switch to the "OFF" position while the engine is running. Equipment damage will occur.

Downloaded from www.Manualslib.com manuals search engine

Livewell (Option)

If equipped, the livewell located in the aft cockpit will keep baitfish alive by circulating fresh seawater through the tank.

NOTICE

The seacock MUST be in the OPEN position before activating the livewell pump. Running the pump dry may cause damage to the unit.

Operation

Before operating the system make certain the hull seacock is in the open position. The seacock can be accessed through the aft cockpit deck hatch (aft of the livewell).

Place the removable standpipe (supplied) in the drain at the bottom of the livewell tank. The standpipe serves as an overflow drain to control the level of the water in the livewell while water is being circulated through the system. A flow control valve (Figure 3.7.2) at the livewell water inlet controls the flow of water into the livewell. To increase the water flow, turn the valve counterclockwise. To decrease flow, turn the valve clockwise.

Livewell Flow Control Valve
Fig. 3.7.2

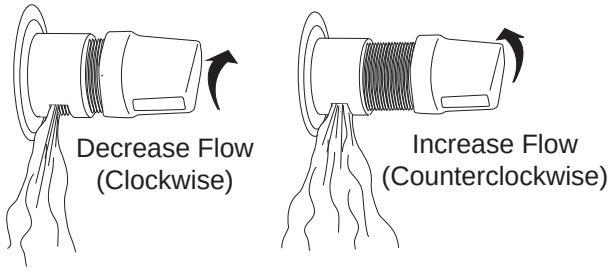

Fill the livewell by pressing the switch marked "ACCY" on the console switch panel (See figure 2.8.1).

A drain /overflow hose with a strainer, directs overflow/excess water to the transom thru-hull drain.

Maintenance

Maintenance of the livewell system requires periodic inspection of the raw water intake strainer and all hose connections. Clean away debris and/or tighten hose connections as required.

Livewell (Option)
Fig. 3.7.1

NOTE: Boat shown with bow rail and livewell options.

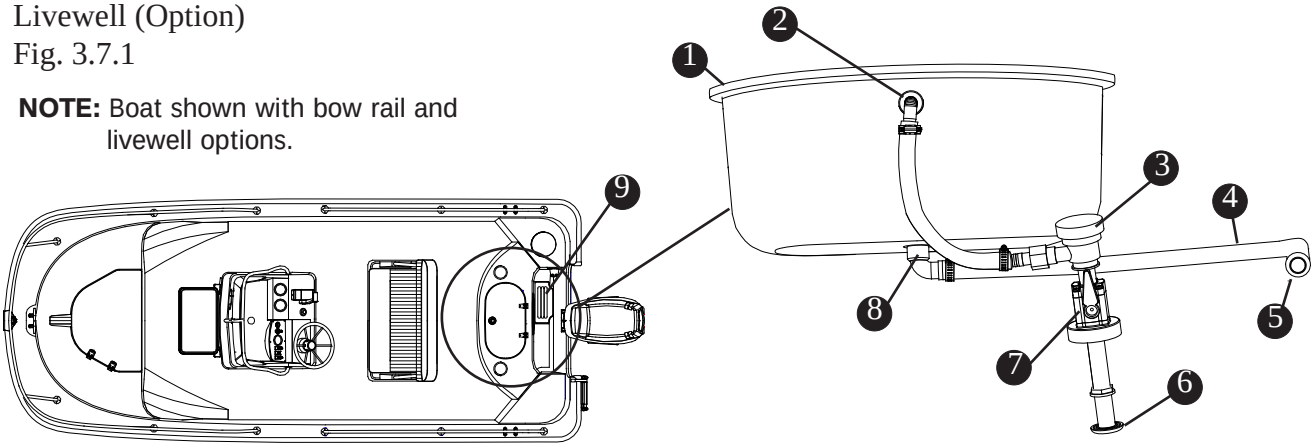

1. LIVEWELL TANK
2. FILL HOSE
3. LIVEWELL PUMP
4. DRAIN HOSE
5. TRANSOM THRU HULL DRAIN
6. SEACOCK THRU HULL INTAKE FITTING
7. SEACOCK
8. LIVEWELL DRAIN
9. AFT COCKPIT ACCESS HATCH

Downloaded from www.Manualslib.com manuals search engine

Anchoring

The 150 Montauk is equipped with an anchor storage compartment located in the bow of the boat. Because there are a variety of anchors, with a variety of uses, **discuss the types of anchors with your dealer to find the right anchor for your boat.**

⚠ WARNING

SWAMPING HAZARD - Anchor from the bow if using one anchor. A small current can make a stern anchored boat unsteady. A heavy current can drag a stern anchored boat underwater.

Considerations

- Wind and sea conditions can affect the boat.
- Because the boat is not moving through the water, there is no control.
- Be sure that the anchor will hold under all circumstances if you are leaving the boat.
- Understand the principles of rode and scope and their effect on anchor performance.

Proper anchoring requires knowledge of RODE and SCOPE and understanding the relationship between rode, scope and anchor performance.

The rode is the line connecting the anchor to the boat. Nylon line is ideal because it is light, strong and stretches, it also can be stored wet and is easy to handle. Add a length of chain between the anchor and the nylon line to aid in setting of the anchor.

The scope is technically defined as the ratio of rode length to the vertical distance from the bow to the sea floor. Scope also depends on the type of anchor, tides, winds, sea conditions and type of sea floor the anchor is in. Since you want to know how much rode to use when anchoring, use this common formula:

Rode length = (bow height + water depth) X Scope

The minimum is 5:1 for calm conditions; normal is 7:1, and severe conditions may require a 10:1.

Example:

Rode length = (3 feet + 10 feet) X 7*

Rode length = 13 feet X 7*

Rode length = 91 feet

* Scope may range from 5 to 10 or more. However, less than 5, the anchor will break out too easily.

NOTICE

Before using the anchor be sure the anchor line is secured to the eye in the bottom of the anchor locker.

Proper Anchoring
Fig. 3.8.1

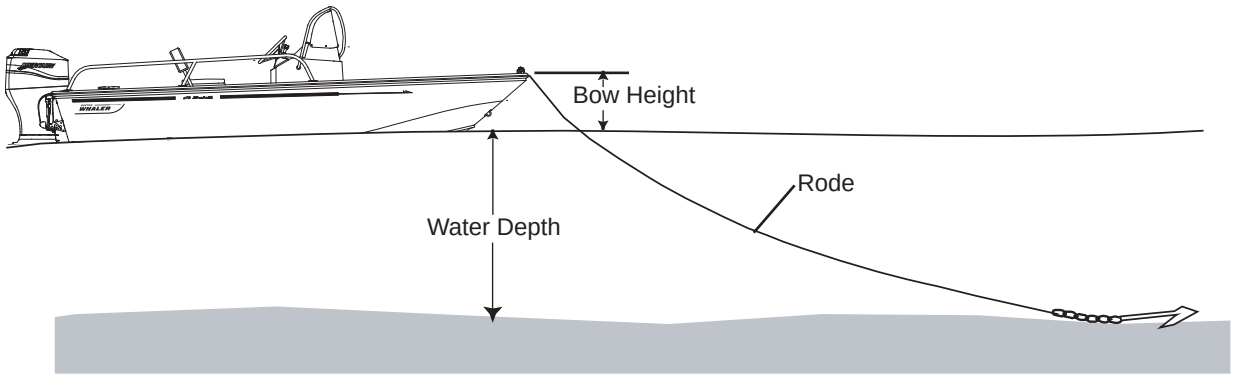

Rode length = (bow height + water depth) X Scope

Downloaded from www.Manualslib.com manuals search engine

Lowering The Anchor

NOTICE

Before using the anchor be sure the anchor line's bitter end is secured to the eye in the bottom of the anchor locker.

- Be sure there is adequate rode.
- Secure rode to both the anchor and the boat at bow locker eyelet.
- Stop completely before lowering the anchor.
- Keep feet clear of lines.

NOTICE

Anchor light must be on when at anchor or drifting (not under power) at night or in low visibility.

Setting the Anchor

There is no best way to set an anchor. Experiment to see how it performs. One method is to turn the rode around a bitt or a cleat and slowly pay out as the boat backs from the anchor site. When the proper scope has been reached snub the rode quickly, causing the anchor to dig in to the sea bottom.

- Reverse the engine slowly to drive the anchor in and to prevent it from dragging.
- Secure the rode to the bitt or cleat to prevent loss of anchor.

Weighing the Anchor

To weigh (retrieve) the anchor, start the boat and run slowly up to the anchor, taking up the rode as you go. The anchor will usually break out when the rode becomes vertical. Coil lines to let them dry before stowing.

⚠ CAUTION

Be careful that trailing lines do not foul in the propeller

Downloaded from www.Manualslib.com manuals search engine

THIS PAGE INTENTIONALLY LEFT BLANK

Downloaded from www.Manualslib.com manuals search engine

Electrical Systems

DC Electrical System

The electrical system on the 150 Montauk is powered by one (1) lead-acid battery. The battery is charged by the engine when the engine is running. The battery powers essential systems on your boat:

- Engine Ignition.
- Engine tilt trim system
- Helm switch panel & helm instrument panel
- Lighting/Navigation systems
- Livewell system (Option)
- Electronics and add-on accessories

Battery

NOTICE

Your battery should always be stored in the battery box.

NOTICE

REFER TO YOUR ENGINE OWNER'S MANUAL FOR EXACT BATTERY REQUIREMENTS.

The chart below is provided for reference purposes only.

Application	Group	Volts	MCA*	CCA**	Reserve	Qty.
Engine	24	12	465	350	N/A	1

*Marine Cranking Amps
** Cold Cranking Amps

Battery Box

Your battery should always be enclosed in the battery box provided with your boat and located in the center console. The box will contain any spilled acid, as well as protect the battery terminals from damage or inadvertent shorting from contact with metal objects.

The battery box should always be secured in place by using the straps and clamps provided, the straps will ensure that while underway the battery will not move around, causing damage to components and/ or equipment stored in the same area.

⚠ DANGER

Batteries contain sulfuric acid which is dangerous and can cause serious injury. AVOID contact with skin, eyes and clothing. If contact occurs, immediately flush the affected area with large quantities of water and call for medical assistance.

Battery Box
Fig.4.1.1

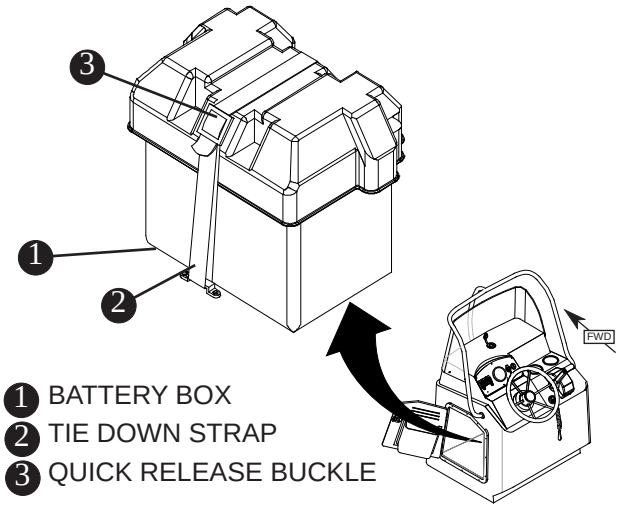

Before use, check the battery for loose connections or wiring. Normal maintenance should include:

- Coating the terminals with dielectric grease
- Keeping the battery dry
- If not using a sealed battery, check & maintain the water level. USE DISTILLED WATER ONLY.
- Removing the battery from the boat during cold weather or long term storage.

The most life shortening experience for the battery is to be drained to zero charge before recharging.

When a battery discharges, the active material on both positive and negative plates converts to lead sulfate, causing the plates to become more alike in an electrical charge. The electricity conducting battery acid becomes weaker and the voltage drops. As the

Downloaded from www.Manualslib.com manuals search engine

battery remains discharged, the process continues until recharging the battery becomes impossible.

If the battery does become run down be sure to recharge it as soon as possible. Over charging the battery can be just as detrimental to its life as running it down too far

⚠ CAUTION

- **NEVER use an open flame in the battery storage area.**
- **Avoid striking sparks near the battery.**
- **A battery will explode if a flame or spark ignites the free hydrogen given off during charging.**
- **ALWAYS disconnect the battery before doing any work or maintenance on the electrical system.**
- **NEVER turn off the battery switches or disconnect the battery cables while the engines are running.**

Main DC Breaker

The Main DC breaker reset is located on the aft wall of the console interior. In the event that the main DC breaker trips determine and correct the problem prior to resetting the breaker.

DC Main Breaker Box
Fig. 4.2.1

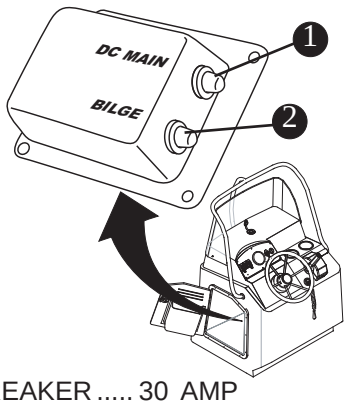

1 MAIN DC BREAKER ..... 30 AMP
2 BILGE PUMP..... 2 AMP

⚠ CAUTION

NEVER reset a breaker without first determining and correcting the cause of the trip. Should a circuit repeatedly trip, have a qualified electrician determine and correct the cause.

Component Breakers

Component breakers are located on the helm switch panel. If a component breaker trips, determine and correct the problem before resetting the breaker. Should a circuit breaker trip repeatedly, have a qualified electrician determine and correct the cause of the trip.

Component Circuit Breakers
Fig. 4.2.2

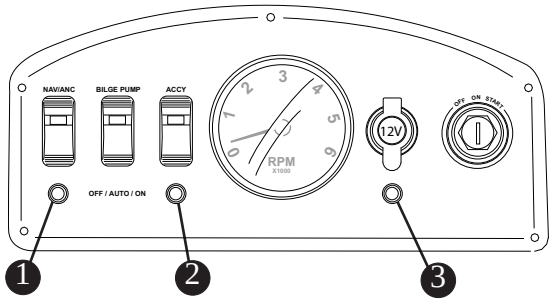

1 NAV/ANC..... 5 AMP
2 ACCESSORY ..... 2.5 AMP
3 12V RECEPTACLE ..... 10 AMP

⚠ WARNING

Use of higher amperage breakers is a fire hazard.

Use ONLY breakers having the same amperage rating as the original or as specified.

Downloaded from www.Manualslib.com manuals search engine

12 Volt Accessory Receptacle

NOTICE

DO NOT insert a cigarette lighter into this receptacle. Damage to the unit & system could occur.

Your boat is equipped with a 12 volt accessory receptacle located on the switch panel (See above). It is a DC (cigarette lighter) style receptacle to be used with any 12 volt accessories using this type of plug. The receptacle is made of corrosion resistant marine grade materials and has a moisture proof cap. There is a 10 amp breaker button located just below the receptacle. **Be sure to use accessories that do not exceed the rated capacity of the circuit, (10 amps) or the breaker will trip.**

Battery Switch (CE Option)

The 150 Montauk has the option of using a battery switch. The switch, located on the aft wall of the console interior, allows you to control the delivery of DC power from the battery to the engine as well as allowing the alternator to charge the battery. Your battery selector switch has two settings, “ON” and “OFF”, “ON” gives you power from the battery only. “OFF” you have no power to the engine. Remember to turn the battery selector switch to “ON” before you attempt to start your engine.

Note: The bilge pump cannot be turned off with the battery selector switch.

Battery Switch
Fig. 4.3.1

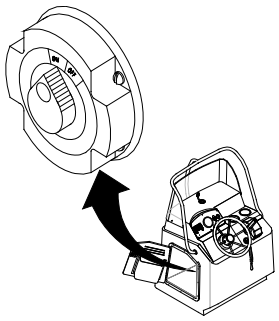

⚠ CAUTION

If equipped with a battery switch, you will need to stop the engine before moving the switch to the “OFF” position.

Trolling Motor (Option)

Your trolling motor manual will have location and connection instructions for the motor wiring. Read and understand the manual before proceeding to connect the extension cord to your motor and your boat’s electrical systems.

Trolling Motor Connection

Using a 12 foot extension cord, connect the BLACK and RED leads to your trolling motor wiring by crimping and heat shrinking the butt connectors.

NOTICE

IT IS IMPORTANT to crimp and heat seal the unused butt connector on your extension cord to avoid damage to your trolling motor system.

Trolling Motor wiring (Option)
Fig. 4.3.2

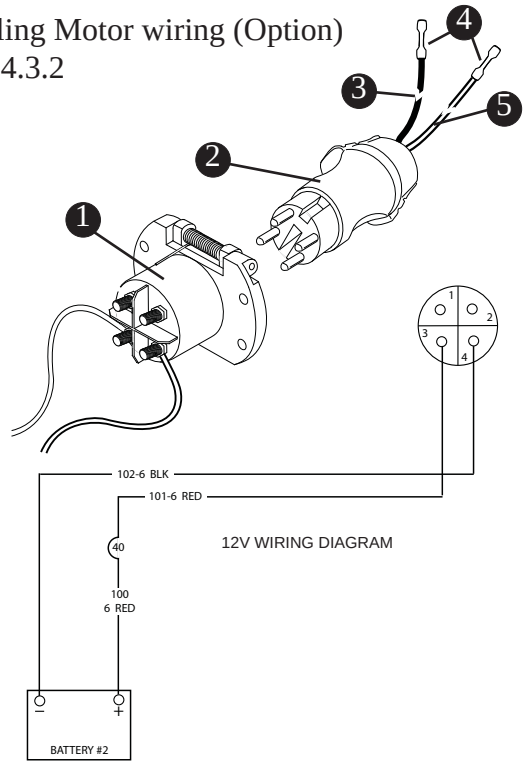

1. TROLLING MOTOR RECEPTACLE
2. EXTENSION CORD PLUG W/12’ CORD
3. BLACK LEAD
4. HEAT SHRINKABLE BUTT CONNECTORS
5. RED LEAD

Downloaded from www.Manualslib.com manuals search engine

⚠ WARNING

There is a risk of electrical shock. Always have a qualified marine electrician install any system upgrades that are not already installed on your boat. There are a variety of wiring configurations up to 36Volts. Incorrect wiring will adversly affect your trolling motors performance. Always use the correct circuit protection and wire gauge when installing an upgraded trolling motor wiring system.

The system is protected by a 40 amp breaker located on the component board in the center console.

In the event a breaker trips, determine the cause and correct the problem before resetting the breaker. A breaker which trips repeatedly should be examined by a qualified electrician to determine and correct the cause of the trip.

REFER TO THE TROLLING MOTOR MANUFACTURER'S MANUAL IN YOUR OWNER'S MANUAL PACKET FOR COMPLETE INSTRUCTIONS, INFORMATION AND WARRANTY.

Trolling Motor Receptacle Breaker
Fig. 4.4.1

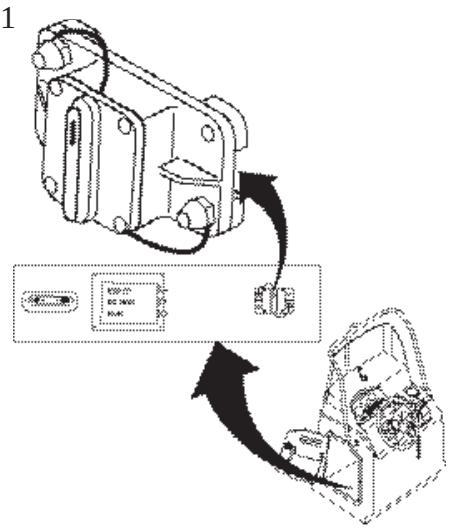

Wiring Identification Chart

Boston Whaler® adheres to electrical wiring requirements which meet all the ABYC-11 standards. The following chart outlines the gauge, color and function of the wiring used.

Wire Color Chart for DC and Special Circuit

COLOR	FUNCTION	COLOR	FUNCTION
GRN	GROUNDING MAIN/TOWER & ALUMINUM FUEL TANKS	BRN/ORN	SUMP PUMP
GRN	GROUNDING	BRN/RED	BILGE PUMP (UNSWITCHED)
ORN	STARBOARD 30 AMP RECEPTACLE	BRN/WHT	MACERATOR
RED	MAIN FEEDS/PORT 30 AMP RECEPTACLE	GRY	RUNNING LIGHTS
BRN/BLK	STARBOARD FISHBOX PUMP	GRY/BLK	ACC 1
BRN/VIO	FORWARD FISHBOX PUMP	GRY/BLU	ACC 2
BRN/YEL	LIVEWELL PUMP (HIGH CURRENT)	GRY/GRN	ACC 3
BRN/BLU	PORT FISHBOX PUMP	GRY/RED	AFT MAST/ACC 4
RED	+12V MAIN	GRY/WHT	ALL ROUND/FWD MAST LIGHT
BLK	GROUND	ORN	REFRIGERATOR or CENTER WIPER
BLK/YEL	STOP CIRCUIT	ORN/BLU	HORN
BLK/WHT	GEN SHUTDOWN	ORN/BRN	STARBOARD WIPER PARK
BLU	COMPASS	ORN/GRN	STARBOARD WIPER
BLU/BLK	DOME LIGHT	ORN/RED	PORT WIPER
BLU/GRN	SPREADER LIGHT	ORN/VIO	VACUUM PUMP
BLU/ORN	LIVEWELL LIGHT	ORN/WHT	CENTER WIPER
BLU/RED	COURTESY LIGHTS	PINK	FUEL SENDER
BLU/VIO	CABIN LIGHTS	RED	12V RECEPTACLE
BRN	BILGE PUMP (SWITCHED)	VIO	IGNITION
BRN/GRY	RAW WATER	WHT	CO MONITOR/ELECTRIC TRIM TAB (SWITCHED)
BRN/GRN	FRESH WATER	YLW	BLOWER/STEREO MEMORY
		YLW/RED	START

Downloaded from www.Manualslib.com manuals search engine

Electrical Schematics & Harnesses

The following page contains an electrical schematic pertaining to the electrical system in your boat. The schematic was generated by technicians in the Boston Whaler® Engineering Department and are for reference and to be used by service technicians.

Boston Whaler® does not recommend that you attempt to work on the electrical system yourself. Instead, we suggest that you take your boat to an authorized Boston Whaler® dealer for electrical service.

Boston Whaler® reserves the right to change or update the electrical system on any model at any time without notice to the customer and is not obligated to make any updates to units built prior to the change.

Switch and Breaker Panel Schematic
Fig. 4.5.1

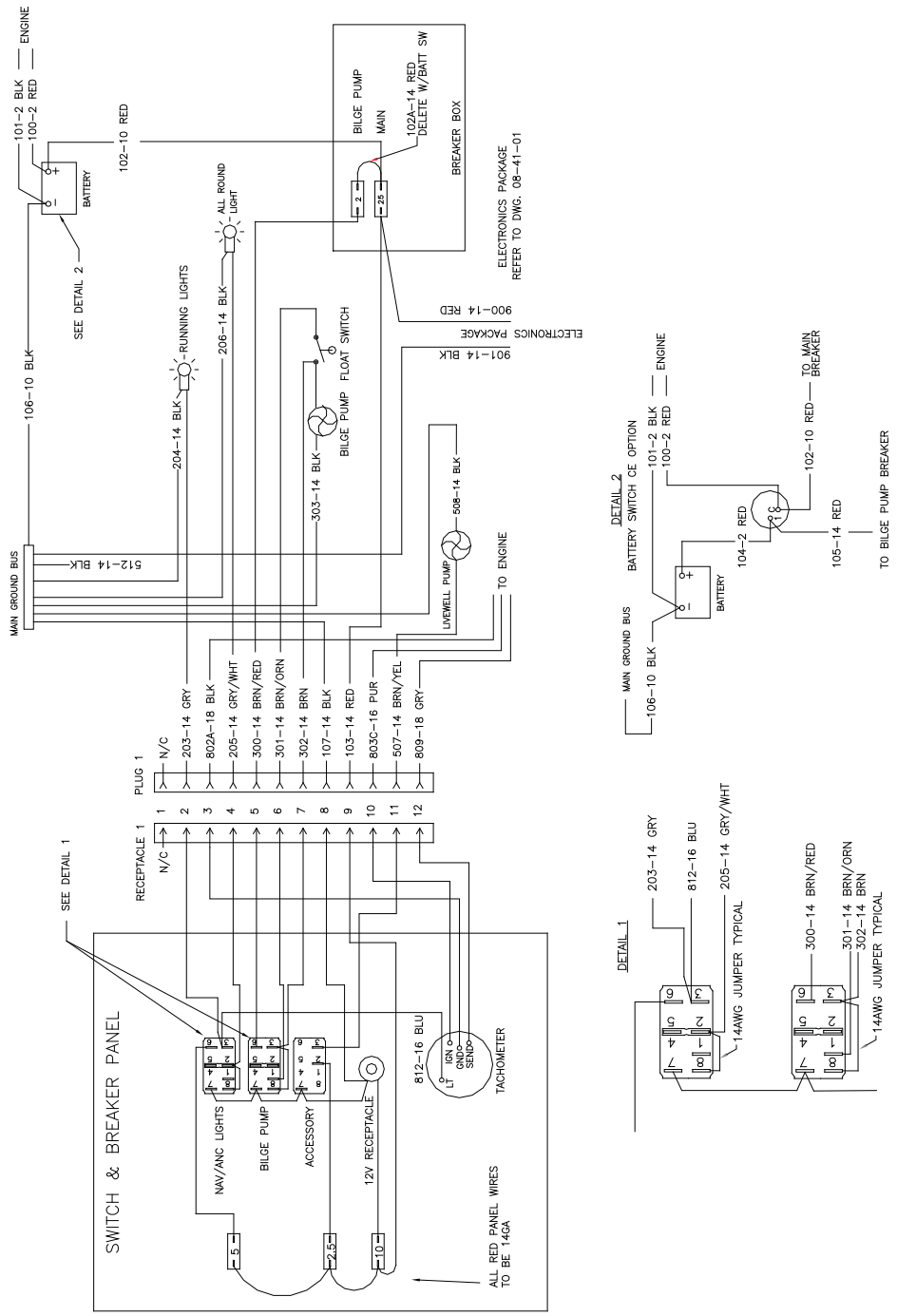

Downloaded from www.Manualslib.com manuals search engine

THIS PAGE INTENTIONALLY LEFT BLANK

Downloaded from www.Manualslib.com manuals search engine

Routine Care & Maintenance

NOTICE

Refer to the individual manufacturers' manuals for important information regarding service, care and maintenance of your boat, equipment and components. Failure to do so may in some cases void the warranty.

Owner's Manuals for your boat and each of the various components and equipment can be found in your Owner's Manual Packet.

⚠ DANGER

When using solvents read all information from the solvent manufacturer regarding safety and handling of the material.

Wear proper protective equipment to ensure your personal safety.

Only use solvents in a well ventilated area and keep all solvents away from open flame and any other forms of ignition.

Routine inspection, service and maintenance of your boat, boat systems and components are vital to assure your safety, as well as prolonging the life of your boat. You should develop regular routines for inspecting and servicing your boat.

⚠ WARNING

IMPORTANT

Regularly inspect & test hardware, fittings, windshields, hatches, seams, etc. for proper seal. Reseal and/or readjust/tighten fittings, latches, etc. as needed.

The interval between necessary service or maintenance is highly variable, depending on the environment in which your boat will be used. For example, corrosion of boat parts and components will occur far more rapidly in a salt water environment than on a boat which is used in fresh water.

This section provides **only general guidelines** for the care and cleaning of your boat. It is **your responsibility** to determine whether maintenance and care intervals need to be accelerated due to your boat usage and/or operating environment.

Hull

Fresh water, saltwater and water temperature can all affect the types of growth that you will find on your boat's hull.

Any growth will affect the boat's performance and overall look. If it has been a while between inspections you might notice algae or slime growth on the hull. This can be cleaned with a coarse towel or soft bristle brush. The growth should be cleaned immediately after the boat has been removed from the water. If the growth is allowed to dry it will be much harder to remove.

Compounding may be necessary to remove more stubborn stains and chalking from the surface of your boat. If compounding is necessary it must be done after a thorough washing and prior to waxing.

If the growth is more severe, you may need to enlist the services of a professional hull cleaning company.

Check with your Boston Whaler® dealer for recommendations on a compatible rubbing compound for your boat or a professional hull cleaning company in your area.

Waxing the Gel Coat Surfaces

Waxing is necessary to provide added protection to the gel coat. A periodic good cleaning and waxing will also ensure that your boat will be protected and look good longer.

NOTICE

Waxing of the exterior surfaces is recommended to be done at least twice a year to protect the gel coat of your boat.

Do not wax over dirt. Make sure the surface of your boat has received a thorough washing and rinsing and is clean before waxing. If a rubbing compound has been necessary, make sure that any minor scratches or surface pitting is cleaned of compound residue. Use a good quality carnauba wax or a high quality wax designed for marine gel coat. Apply several coats.

Downloaded from www.Manualslib.com manuals search engine

Hull Maintenance

If using a pressure washer to clean the hull and deck surfaces of your boat it is important that you use the wide fan nozzle only and move the spray head in a continuous motion. Do not concentrate the high pressure on a small area of the boat surface and NEVER use the fine pinpoint nozzle as the concentrated stream can cause damage to the surface of your boat.

It is also recommended that your refrain from pressure washing the console as high pressure may compromise the integrity of the electronics and gauges as well as other equipment installed on your boat. Also avoid pressure washing all caulk seams.

When staining from build-up does occur, use only cleaning agents that are recommended for marine gel coat for use on those stubborn stains.

NEVER use an abrasive cleaner to wash your boat's hull.

NEVER use an abrasive pad to attempt to remove stubborn stains.

NEVER use strong solvents to clean.

NEVER apply tape or any other type of adhesives directly to the painted surfaces on your boat.

Use care when covering your boat's painted surfaces as tarps and other such covers can trap dirt and cause chafing. It is best to use a frame of either aluminum or wood to keep the cover up and allow air to circulate.

Hull Blistering

Due to the quality of the materials used in the hulls of Boston Whalers, blistering is rarely ever seen. Blistering is caused by water soluble materials in the hull laminate. The fiberglass and resin structure of your boat is porous. However, intrusion of water into the gel coat will take some time. The effect of osmotic pressure allows water to impregnate below the gel coat and substrate thus forming a blister.

There have been extensive university studies funded by the United States Coast Guard regarding the cause and effect of blistering in the gel coat of fiberglass boats. Fiberglass blisters can form anywhere from near-surface layers of the gel coat to very deep into the fiberglass structure. The damage can range from cosmetic to catastrophic, (although the latter is a very rare occurrence). The studies seemed to point toward long term immersion of the hull in warm water as a primary cause of hull blisters. Stress cracks on the hull below the waterline also contribute to the formation of hull blisters.

Prevention

There are a variety of ways to prevent the formation of hull blistering. Epoxy coatings can be applied to the hull, followed by hull painting. An alkyd-urethane-silicone marine paint can also be used to aid in the prevention of hull blisters.

Reducing the amount of time that your boat stays in the water also helps prevent hull blisters from forming. Use of a trailer or boat lift will reduce the likelihood of hull blisters forming. Be sure to use a bunk type lift or trailer for storage of the boat out of water.

Contact your Boston Whaler® dealer for more information on the prevention and treatment of hull blisters.

Bottom Painting

⚠ DANGER

There are risks and dangers inherent with the use of paints and solvents. Dispose properly of all rags, rollers and trays used for painting. Follow all the precautions and regulations listed by the manufacturer before and after painting your boats hull.

NOTICE

If blisters are present in the hull, they need to be properly cleaned and dried out before any barrier protection can be applied.

Downloaded from www.Manualslib.com manuals search engine

If your boat will spend most of its time in the water, painting the bottom of your boat's hull is a good way to slow the formation of hull blisters and to keep bottom growth (fouling) under control.

If you will be trailering the boat to and from the water, you might want to forgo the painting.

Following is an abbreviated section on painting your hull bottom. Your Boston Whaler® dealer should have information on properly painting your boat's hull or recommendations on businesses that will paint your hull for you.

⚠ CAUTION

DO NOT paint over zinc plates. This action will render them usless and lead to deterioration of the underwater metal parts of your boat.

Some bottom paints contain metals that can cause corrosion of the outboard engine. Leave a minimum of 3/4" unpainted around all engine parts. Use only a paint specifically designed for aluminum engines as anti fouling protection.

Bottom Painting a Bare Hull

Since the boat has never been painted preparation is the key to successful hull painting. Take extra care and time in preparation before proceeding to paint.

Begin by scrubbing the surface thoroughly with a stiff brush using an all-purpose marine soap and water to remove loose dirt and contamination. Flush with fresh water to remove all soap residue.

The gelcoat will have to be dewaxed of mold release wax before sanding can begin, otherwise the wax will be dragged into the scratches and will reduce the adhesion properties of the paint.

⚠ WARNING

Proper ventilation and capture of the dust created by sanding is essential. The dust created by sanding is toxic and should not be breathed. A proper fitting respirator must be used.

DO NOT use a paper filter mask.

Remove any mold release wax that may be present using fiberglass surface prep solvent and a scrub pad. Scrub only a few square feet at a time. Flush with fresh water. If the water beads up or separates, continue scrubbing the surface. When the water sheets off, the wax contaminate has been removed.

After the dewaxing is complete, application of a primer coat is recommended. Pay close attention to scratches, nicks and dings in the surface. If necessary, fill any repair areas with a watertite epoxy filler. After filler is cured, sand with 80 grit paper until smooth. Remove the sanding residue using a fiberglass solvent wash.

The paint can be applied after sanding and cleaning is complete. Follow the paint manufacturer's recommendations for application.

Bottom Painting a Pre-Painted Hull

⚠ WARNING

Bottom paint is designed to resist algae growth which means it has chemicals embedded in the paint that are harmful if ingested. Take all necessary precautions required before painting or repainting your boat's hull.

If the hull bottom is already painted, you must be sure to test the paint's adhesion to the already painted surface. If the paints are incompatible, the new paint will not adhere to the hull bottom or the paint will "lift" the old paint. **NEVER** apply paint without first preparing the old painted surface following the paint manufacturer's recommendations.

Follow the paint manufacturer's recommendation for applying the paint. Humidity and weather will play a role in how and when the paint is applied. Several thin layers are better than one thick layer.

To determine the waterline, you will need to place the boat in water with a full load of fuel and gear.Mark the waterline and measure above the marked line 1 to 3 inches for placement of the tape line.

Downloaded from www.Manualslib.com manuals search engine

NOTICE

Masking tape is NOT recommended for the types of paint you will be using.

Make sure that there is enough paint left to cover areas that were not accessible, (slings, jack stands etc.) and paint accordingly. Follow the paint manufacturer's recommendation for do's and dont's after the painting is complete.

NOTICE

Painting your boat's hull will adversely affect the boat's speed and performance and may require re-propping if the maximum engine RPMs drop below the engine model/mfg recommended operating range.

Rubrail Care

The rubrail on your boat is constructed of an injected high density PVC vinyl material which laboratory tests have proven to be highly resistant to staining, fading and cracking.

As resilient as this material is, you still need to follow some basic maintenance precautions.

General maintenance requires a thorough cleaning with mild soap & water. **DO NOT** use any cleaning agents which contain chemicals.

Although the outer shell is tough and durable, there is a chance that it can be breached. Use care when docking or exposing the rubrail to conditions which may cause damage such as docking against heavily barnacle-encrusted pilings.

Some tears (cleanly sliced) can be repaired with a "Super Glue" type product.

Thoroughly clean and dry the affected area. Apply glue and hold the surfaces together.

Areas which have been torn or are affected by heavy abrasion will have to have the damaged section replaced. Please see your Boston Whaler® dealer for this type of repair.

Cleaning Fiberglass & Non-Skid

To protect your deck and non-skid areas from the deteriorating affects of the sun, oxidation, water spots and pollution, use a good quality "fiberglass and non-skid deck" wax every two to three months.

When applied to your deck and non-skid areas, as recommended by the manufacturer, the wax forms a protective non-slick surface which will keep debris from sticking. Dirt, soot, bird droppings, and even fish blood will rinse right off.

NOTICE

NEVER use abrasive cleaners, detergents or soft scrub type cleaners to wash your boats surfaces.

NEVER use abrasive pads, brushes or sponges to attempt to remove stubborn stains.

NEVER use strong solvents or detergents which contain chlorine.

Stainless Steel Care

The cleaner your stainless trim and fittings can be kept, the greater the assurance of optimum corrosion resistance. Without proper care even the best stainless steel will corrode.

Stainless steel is strong and corrosion resistant, but still requires maintenance to keep its appearance. Frequent routine cleaning of your stainless steel with a mild soap and water solution and coating with a good grade cleaning wax will help maintain the finish.

- Wash with mild soap and cold or lukewarm water.
- Dry THOROUGHLY.
- Apply cleaning wax with a soft, dry cloth.
- Allow wax to dry, then polish and buff.

Downloaded from www.Manualslib.com manuals search engine

Even the finest cleaning powders can scratch or burnish a mill-rolled surface. On polished finishes, rubbing or wiping should be done in the direction of the polish lines, NOT across them.

Crevice corrosion, a brownish coloring which occurs where two pieces of stainless hardware meet is caused by impurities in water and air. It can be easily cleaned with a good grade marine polish using a sponge, cloth or small bristled brush (for nooks and crannies).

NOTICE

NEVER use abrasive cleaners, detergents or soft scrub type cleaners to wash your boats surfaces.

NEVER use abrasive pads, brushes or sponges to attempt to remove stubborn stains.

NEVER use strong solvents or detergents which contain chlorine.

NEVER use silver cleaners.

Aluminum Care

Preventative maintenance is essential to life of the metals on your boat. The presence of salt particles and moisture is the major cause of white spots, pitting and corrosion.

The use of harsh chemicals can also cause deterioration. Manufacturers and applicators of protective coatings will not warrant protective coatings on metals in the marine environment. Proper owner maintenance is required to reduce deterioration which will result in most cases by failure to wash down and wipe dry after each use and/or the use of abrasive, acidic or other improper cleaners.

Wash completely using a soft cloth and mild detergent to remove salt particles. Hosing alone will not dislodge all particles. **DO NOT** allow soap to dry as it may cause stains on coated surfaces. Make sure to wash and dry the full circumference of aluminum parts.

Apply an aluminum protectorant at least twice each year, more frequently as conditions warrant. Neglect will cause pitting of the surface which cannot be reversed.

Inspect and repair or replace all damaged nylon bushings, washers or other hardware designed to prevent contact with dissimilar metals.

Whenever electrical or electronic changes are made to the boat, a qualified marine technician should check aluminum parts for stray currents. Make sure all electronic equipment is properly grounded with adequate sized wire.

Cushions

Saltwater, salt residue, dirt, ultra-violet rays etc. will take their toll on vinyl products causing them to lose their luster and texture.

The cushions on your boat are made of a durable vinyl material called OMNOVA which is protected by a finish called PreFixx®. PreFixx® will keep your cushions looking new far longer than most other vinyl upholstery.

To Clean Your Cushions

⚠ CAUTION

Solvents are flammable. Exercise proper care. Wear rubber gloves during all cleaning activity.

Use caution when cleaning around buttons, stitching and wooden or decorative trim as these solvents could seriously damage such areas.

- **Remove ordinary dirt and smudges** with a mild soap and water solution. Dry with a soft, lint-free cloth or towel.
- **More difficult stains** can be cleaned using rubbing alcohol (isopropyl alcohol). Rinse cleaned area with fresh water and dry with a clean, soft, lint-free cloth or towel.

Downloaded from www.Manualslib.com manuals search engine

- **Seemingly permanent stains** like ballpoint ink can be cleaned with active solvents such as nail polish remover when applied with a soft cloth or damp sponge and rubbed. Rinse cleaned area with fresh water and dry with a clean, soft, lint-free cloth or towel.

The vinyl material and superior finish has been tested to resist heavy abrasion. Complete cleaning instructions are included in the owner's packet. Read all information provided by the cushion manufacturer regarding the proper cleaning and maintenance.

Your cushions are not waterproof. They are constructed of open-cell foam and will absorb and hold water. The foam is wrapped with a plastic barrier which helps to keep water from being absorbed into the foam but also will not allow water to dissipate once the foam is soaked. **Do not leave the cushions in standing water or exposed to heavy, prolonged rain**.

If, in the event your cushions become waterlogged, remove the foam from the cushion, press as much water as you can from the foam and allow to air dry. Make sure the plastic wrap is dry before wrapping the foam and inserting it back into the cushion.

To prevent mildew, keep the vinyl dry and make sure that moisture does not accumulate between the cushions.

Cleaning Your Instrument Gauges

When gauges are exposed to a saltwater environment, salt crystals may form on the bezel and plastic covers. Remove the salt crystals with a soft damp cloth. Clean with a mild household detergent or plastic cleaner.

Never use abrasives or rough, dirty cloths to clean plastic parts. A mild household detergent or plastic cleaner should be used. Wipe clean with a damp chamois.

FOR MORE INFORMATION, CONTACT MERCURY MARINE CUSTOMER SERVICE AT 1-920-929-5040

Canvas Care and Maintenance

NOTICE

DO NOT use detergents, bleach or solvents to clean your canvas.

To keep your canvas and metal parts in good working condition and in good appearance, you will need to keep them clean.

The fabric should be cleaned regularly before substances such as dirt, pollen, etc. are allowed to accumulate on and become embedded in the fabric. The canvas can be cleaned without being removed from the installation.

Chafing, fiber wear from dirt and grit and deterioration from ultraviolet light can cause your canvas to degrade over time.

Maintaining a good appearance

- After each use, especially if used in salt water areas, rinse the canvas completely with fresh cold water.

On a regular basis

- Brush off any loose dirt, pollen, etc.
- Hose down with fresh cold water and clean with a mild solution of a natural soap in lukewarm water (maximum 100°F / 38°C).
- Allow the canvas to soak. DO NOT ALLOW THE SOAP TO DRY.
- Rinse thoroughly with fresh water.
- Let the canvas dry completely. **DO NOT** store any of the canvas pieces while wet.

The effects of ultraviolet light can sometimes be reduced by chemical treatment of canvas items.

Consult your Boston Whaler® dealer or check your canvas manufacturer's manual **BEFORE** using any chemical treatments on your canvas.

Downloaded from www.Manualslib.com manuals search engine

Cleaning Stubborn Stains

Soak fabric for approximately twenty minutes in a mild solution consisting of no more than 1/2 cup (4 oz.) of bleach and 1/4 cup (2 oz.) of natural soap per gallon of lukewarm water (not to exceed 100° F / 38° C).

Rinse thoroughly in cold water several times.Allow the fabric to air dry completely.

NOTICE

Failure to remove all of the soap solution can cause deterioration of seams and prevent fabric from proper retreating.

Retreat the fabric using an air curing product such as 303 High Tech Fabric Guard to ensure water and stain repellency.

All canvas should be stored flat or rolled in a clean, dry space.

Maintaining Zippers and Hardware

Lubricate zippers and fasteners periodically with a clear silicone spray. In the absence of silicone spray, a wax candle can be used to lubricate the zipper track.

Replace any missing fasteners or any fasteners showing signs of corrosion.

NOTICE

DO NOT use petroleum based products, such as petroleum jelly, on the zippers or fasteners.

Cleaning Acrylic Windscreen

- Rinse windscreen thoroughly with clear water to remove any dust, dirt particles, salt water or environmental agents before applying cleaning products.

  Use your bare hand, with plenty of water, to feel and dislodge any stuck-on dirt or foreign particles.

  This should be done frequently to avoid build up of salt water, dirt and other environmental contaminants.

- Using a soft non-abrasive cloth, wash windows inside and out with a mild soap (Woolite, Joy, Palmolive, etc.) and water solution. Rinse completely with cool water.

  DO NOT USE DETERGENTS.

- Blot dry with a soft cloth or chamois to prevent water spots.

The use of a polycarbonate protective cleaner/ restorer is recommended to keep your acrylic scratch resistant, clean and minimize the deteriorating effects of sunlight.

NOTICE

Never use a dry cloth or duster or glass cleaning solutions on acrylic.

DO NOT use solvents such as acetone, silicone spray, benzine, carbon tetrachloride, fire extinguisher fluid, dry cleaning fluid, lacquer thinner, glass cleaning solution or harsh detergents on acrylic.

The above substances will attack the surface of the acrylic.

Downloaded from www.Manualslib.com manuals search engine

Long Term Storage & Winterization

Long periods of storage, winter lay-up and/or non-use, common to boats, create unique problems. When preparing to store a boat for extended periods of two months or more it is best to make sure that the boat and its systems are properly conditioned for such extended periods of non-usage.

The guidelines presented on the following pages give basic instructions on "winterizing" your boat and boat systems. If inexperienced with the process of winterization it is best to hire the services of a professional.

In addition, always consult the owner's manuals of the various systems and equipment on your boat for the manufacturer's recommendations on winterizing and long term storage.

Engine

⚠ CAUTION

Never start or run your outboard (even momentarily) without having water circulating through the cooling water intake holes in the gear case. This will prevent damage to the water pump (running dry) or overheating of the engine.

Protecting your engine's vital moving parts from corrosion and rust caused by freezing of trapped water or excessive condensation due to climatic changes is very important. Freezing water in the engine can cause extensive damage to the internal moving parts. Internal engine parts can also be affected by rust due to lack of proper lubrication

- Replace the engine oil and filter, running the engine to drain out as much old oil as possible.
- Flush the engine with fresh water using flush muffs or a similar device attached to the raw water pickup.
- Let all water drain from the engine.
- Fog the engine while it is running. Spray until it stalls.
- Run fuel which has been treated with conditioner and stabilizer through the engine.
- Replace lower unit gear oil. Check for moisture in old oil, a sign of deteriorating seals.
- Remove the prop and grease the shaft and threads.
- Treat all grease fittings with the recommended lubricant.
- Lightly lubricate the exterior of the engine or polish with a good wax.
- Check engine mount bolts. Ensure that they are torqued to 55 ft/lbs.

In addition, be sure to follow all recommendations in your engine manufacturers operation manual.

Fuel System

Tank(s), hoses, and fuel pumps should be treated to help prevent the formation of varnish and gum.

Temperature extremes will cause condensation to accumulate in an empty or partially filled fuel tank leading to fuel contamination and/or premature wear of your system.

Fill the tank 95% full to allow for expansion, and add fuel stabilizer and conditioner, following the manufacturer's recommendations, to provide fuel stability and corrosion protection.

NOTICE

Pay particular attention to the information provided in "Ethanol-Blended Fuel" in section 3 of this manual.

Downloaded from www.Manualslib.com manuals search engine

Electrical System

- Check all connections and tighten if necessary.
- Spray all connections with an anti-corrosion spray.

Battery

NOTICE

Remove battery from boat and store in a cool, dry location. Periodically check the battery during storage.

- Disconnect the battery cables (negative cable first).
- Remove the battery from the boat.
- Clean the terminal ends of the cables and battery teminals with a solution of baking soda and water. Rinse thoroughly with clean water.
- Apply a coat of grease on the terminal ends of the cables and the battery terminals.
- Store the battery in a cool, dry area.
- Use a trickle charger to keep the battery charged or charge the battery every 30-60 days.

NOTICE

Follow the manufacturer's recommendations for long term storage of your battery(s).

Deck

Clean the deck with soap, hot water and a stiff brush to clean up any oil spills.

Drainage

It is important to raise the bow of the boat enough to allow for proper drainage of water from the deck and bilge area. Make sure all the drainage fittings are clear and free of debris and plugs are removed. Store the engine in an upright position to promote adequate drainage of water.

Avoid Loss

Remove any valuables or anything that can be easily removed from the boat such as electronics, lines, PFDs, fenders, cushions, etc. and store at home.

Cover

When covering your boat it is best to use a frame of either aluminum or wood to keep the cover up. This allows air to circulate and discourages water from pooling on the cover.

NOTICE

DO NOT USE a bimini top in lieu of a cover. Damage and aging will occur while providing no protection for your boat.

Vents along the entire length of the cover will allow condensation to escape. Placing a series of foam pads between the hull and cover will also aid in air circulation and reduce condensation.

To help keep your boat dry and mildew free, consider placing commercial odor and moisture absorbing products in the boat under the cover.

Trailer Storage

Repeatedly immersing the trailer in water during boat launching can cause a variety of problems. Water seeping into the wheel hubs will cause the grease to emulsify and can prematurely corrode the bearings.

Check with the trailer manufacturer for scheduled maintenence of your trailer.

Downloaded from www.Manualslib.com manuals search engine

Environment

Antifreeze and other winterizing fluids can be toxic to aquatic life and cause harmful effects to plant life.

Improper disposal of, or spillage of antifreeze and/or any winterization fluids can cause environmental problems when allowed to empty into waterways or on the ground. Furthermore, it is illegal, punishable at minimum by fines.

Used antifreeze or any winterization fluids, should not be disposed of into sanitary sewers or publicly owned treatment plants.

Persons who have any questions regarding recycling antifreeze or other toxic fluids should write or call their state's EPA office.

Reinforcement Location Diagram

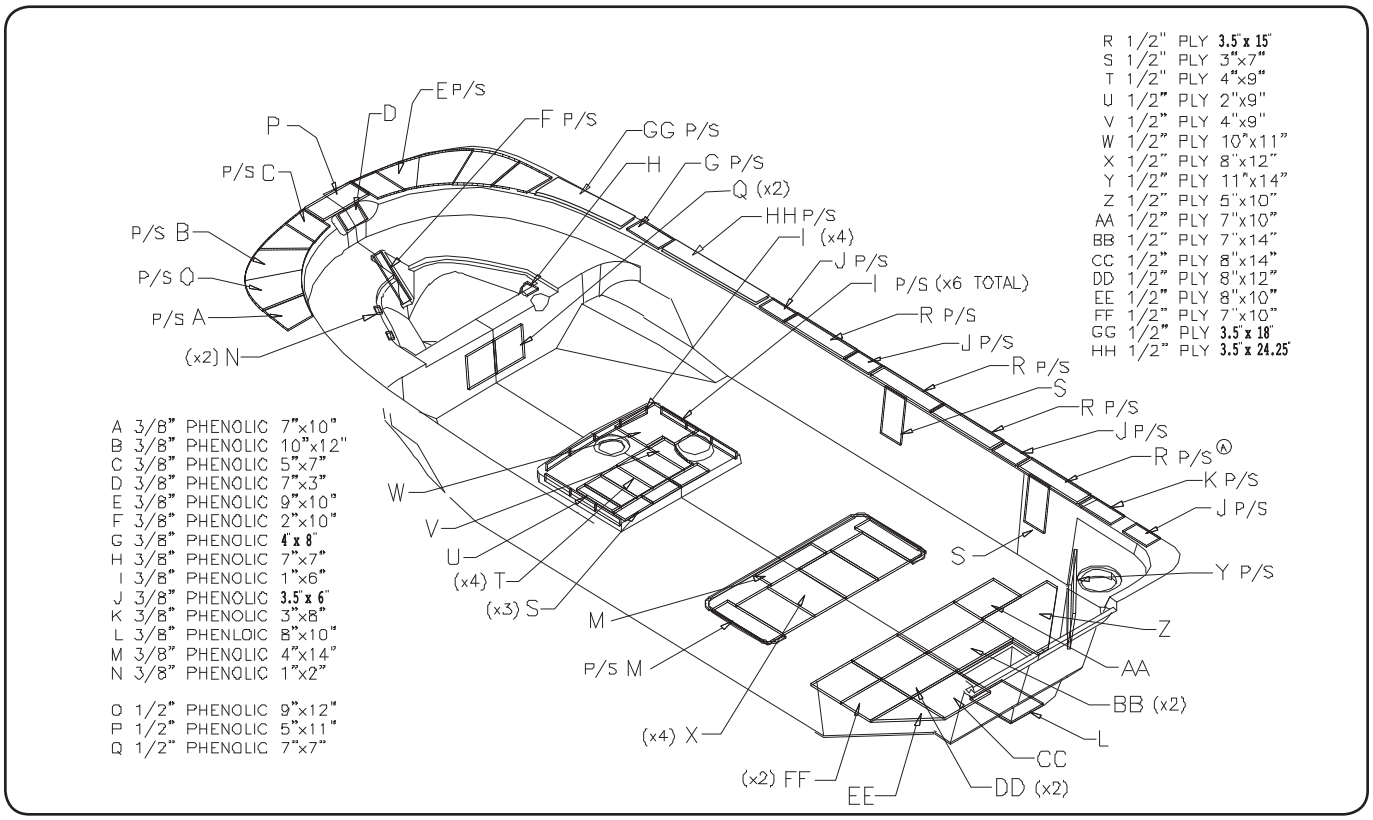

Reinforcement Locations

Your boat has been manufactured with reinforcement in various locations throughout the deck.

In the event you wish to add equipment to your boat which requires you to penetrate the deck with fasteners, the diagram above illustrates the size, location and type of the reinforcement available. The chart below provides a description of the material and recommended fasteners to secure your equipment.

⚠ CAUTION

DO NOT attempt to secure equipment in any location other than those that are illustrated.

Reinforcement	Construction	Equipment weight	Fastener Type*
Plywood	Standard boatbuilding material	Light	Self-tapping screws
Trevira	Thick spunbound polyester fabric	Light	Sheet Metal screws
Sparalloy	High density plastic	Medium	Self-tapping screws
Phenolic**	Fiberglass reinforced composite board	Heavy	Drill & Tap

* In all cases it is recommended to drill and countersink a pilot hole to prevent damage to the gelcoat surface.
**Also known as Whaleboard

Downloaded from www.Manualslib.com manuals search engine

Fill out the log below after scheduled service or maintenance is performed.

MAINTENANCE LOG

DATE	ENGINE HOURS	SERVICED BY	MAINTENANCE PERFORMED

NOTES

Downloaded from www.Manualslib.com manuals search engine

THIS PAGE LEFT INTENTIONALLY BLANK

Downloaded from www.Manualslib.com manuals search engine