Manual
for owners and skippers

Sailing yacht „BAVARIA 31"

BAVARIA YACHTS

Bavaria Yachtbau GmbH • Industriestraße 11 • D – 97232 Giebelstadt
Tel.: +49 (0) 9334 942 – 0; Fax: +49 (0)9334 942 - 116

INDEX

Introduction page 4
Category of design page 5
Builder's plate page 6
Warnings page 6
Declaration of Conformity page 7

1. Description of the yacht

1.1 Main particulars
- 1.1.1 Principal dimensions
- 1.1.2 Displacement and weight
- 1.1.3 Motorization
- 1.1.4 Electrical installation
- 1.1.5 Tank capacities
- 1.1.6 Fixing point for cranes, resting-points for slipping and transport

1.2 General arrangement
- 1.2.1 Rigging plan
- 1.2.2 Deck arrangement
- 1.2.3 Accommodation plan

1.3 Drive system
- 1.3.1 Sails
- 1.3.2 Rigging
- 1.3.3. Motorising, engine room, gear, propeller

2. Installations and circuits

2.1 Tanks and piping - water
- 2.1.1 Fresh water, drinking water - cold
- 2.1.2 Sea-water circulation
- 2.1.3 WC-installation, holding tank

2.2 Tanks and piping - fuel

2.3 Steering gear
- 2.3.1 Description of the system
- 2.3.2 Rudder blade and rudder bearing

2.4 Bilge pump, bilge lines
- 2.4.1 Description of the pumping arrangement

2.5 Electric installation
- 2.5.1 AC-installation
- 2.5.2 DC-installation
- 2.5.3 Operating the installation and specific features
- 2.5.4 Important warnings on the DC-installation
- 2.5.5 Important warnings on the AC-installation
- 2.5.6. Distribution of electric devices
- 2.5.7. Wiring plans
- 2.5.8. Distribution plans
- 2.5.9. AC-distribution

2.6 L.P.G. installation
- 2.6.1 The components
- 2.6.2 Operation

2.7 Fire protection

2.8 Anchor

2.9 Engine cooling system

2.10 Exhaust gas system

2.11 Ventilation/Airing

2.12 Board ducts, sea water valves

3. Environmental protection

3.1 Fuel and oil

3.2 Waste

3.3 Sound

3.4 Swell

3.5 Exhaust gas

3.6 Antifouling, coatings

3.7 Varnish remover

4. Maintenance

4.1 Maintenance, cleaning

4.2 Wearing- and spare parts

4.3 Repair work

4.4 Winter storage

5. Final remarks and notes

6. List of manuals supplied

Introduction

This manual will help you to handle your yacht safely and with pleasure. Apart from information about the yacht itself and installed or additionally supplied fittings the manual also contains information on operation and maintenance. Please familiarise yourself with everything before you go on your first voyage.

We recommend to keep copies of essential parts of the manual like warning notes and some diagrams on board in case of necessary troubleshooting and/or repair.

If this is your first yacht or if you are not really familiar with the special characteristics of a motor yacht please make sure you get proper training before you put it into operation. Do not hesitate to contact the dealer or our shipyard for information about further training possibilities.

A manual is a technical document describing the yacht and its technical systems. It supports the skipper in operating the yacht and its systems safely and might support troubleshooting and repair. Furthermore it helps the owner to maintain the yacht so that it keeps its value.
However, a manual cannot replace the necessary knowledge and skills of seamanship.

PLEASE KEEP THIS MANUAL IN A SAFE PLACE
AND HAND IT OVER TO THE NEW OWNER IF YOU SELL THE YACHT.

BAVARIA would like to welcome you to the circle of **BAVARIA** owners and would like to thank you for placing your confidence in our products by acquiring this yacht.

Your contract partner and the management and staff of Bavaria Yachtbau GmbH hope you will enjoy your new yacht.

Bon voyage, fair winds and fine weather.

BAVARIA Yachtbau GmbH
Management

W. Herrmann

Category of design

Following the European Recreational Craft Directive each boat has to be classified according to a category of design.

All sailing yachts of BAVARIA belong to the category of design A,

designed for extended voyages where conditions may exceed wind force 8 (Beaufort scale) and significant wave heights of 4m and above, and vessels largely self-sufficient.

Certification

Actually the EC Directive intends for yachts of this size the certification module Aa only. That means that the manufacturer certifies the correspondence of construction and equipment with the Directive itself but stability and buoyancy is checked by another notified body.

Lloyd's Register Quality Assurance GmbH – Yacht Services in Hamburg (a 100% subsidiary of Lloyd's Register of Shipping; London) was put into charge as a notified body (see: Declaration of Conformity).

For reasons of safety for the crew of LRQA GmbH was also put into charge to carry out extensive series building supervision.

Identification

The hull identification was formed into the transom on starboard side. This is a unique sequence of digits and letters. It is

This sequence of digits and letters stands for the following information:

DE	Country of production: Germany
BAV	Unique code of the Manufacturer
J31S3	Unique serial number chosen by the manufacturer
D	Start of construction in April (A- January, B-February a.s.o.)
1	Final digit of the year 2001, in which construction began
01	Final digits of the model year 2001

Builder's plate

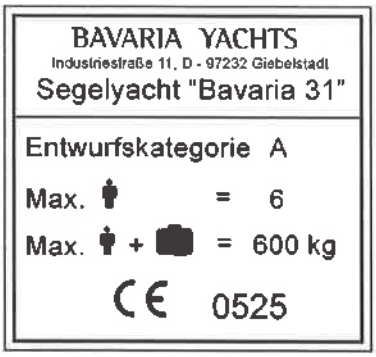

The builder's plate on the front wall of the cockpit is a demand of the Directive because certain information are required which will be explained in the following.

Explanations

- Category of design A: Ocean

- Max. =6: Maximum number of persons recommended by the manufacturer if the yacht is situated in the sea area corresponding to the category of design. The number of crew can be increased under consideration of the maximum additional loading capacity if the yacht is on a voyage in non-ocean areas.

-Max + = 600 kg: Maximum additional loading including 6 persons, stores, provisions and personal equipment (excluding tank capacities).

- CE 0525: CE marking which indicates the conformity of the yacht with all provi sions of the Directive. The sequence of digits is the code number of the certifying body ,in this case the Lloyd's Register Quality Assurance GmbH – Yacht Services - (see: Declaration of Conformity).

Warnings

Many chapters of this manual will support a troublefree operation, maintenance or draw your attention to signs of dangers. To find them more easily they are especially marked (in boxes or in bold). We advise you to study them carefully although the experienced skipper might be quite familiar with many of them. The following chapters contain such warnings/notes or other important information for operating the yacht.

Danger
means that an extreme real hazard which will lead to the death or too irreparable injuries with great probability exists if no adequate precautions are found.

Warning
means that a hazard which can lead to injuries or death exists if no adequate precautions are found.

Caution
means, that a memory of safety measures or the attention judges on handling, that can be unsure or lead to personal injuries or to harm of the vessel or from components.

1. Description of the yacht

1.1 Main particulars

1.1.1 Principal dimensions

Length overall	L_{OA}	10,00 m	Length of hull	L_H	9,55 m
Length on waterline	L_W	7,55 m	Breadth max.	B max	2,99 m
Draught - normal keel D_{max}	abt	1,75 m	Draught - flat keel	D_{max} abt	1,25 m
Headroom (without antenna and similar things)			H_D	abt	13,62 m
Headroom (for transport)			H_T	abt	3,60 m

1.1.2 Displacement and weights

Weight of the empty yacht -incl. safety equipment	3600 kg
Weight of the fully equipped yacht- ready for sailing with crew	4400 kg
Ballast	1100 kg

1.1.3 Motorization

Diesel engine:

Manufacturer	Volvo Perkins	Type	MD 2020
Output	14 kW at 3.600 rpm	Cooling	indirect (sea-/fresh-water)
Reverse-reduction gear	Saildrive 120S-D	Reduction ratio	2.48 : 1
propeller	2-bladed fixed propeller made from an aluminium alloy		

1.1.4 Electrical installation

220/110 V (option) AC-installation

shore connection (option) socket CEE-plug current operated 230 V earthed socket

battery charger (option) 230 V AC / 12 V DC with 27 A max. current (option)

12 V DC-system

1 x engine battery 12 V 55 Ah 1 x bord battery (option 2 x) 12 V 140 Ah

motor generator (alternator) battery charger (option)

The distribution occurs about switchboard, electric circuits with thermal safety switches, LED display, rocker switches and voltmeters with changeover switch.

1.1.5. Tank capacities

1 fresh water tank	abt 150 l	on port side below the aftcabin berth.
1 fuel tank	abt 90 l	on starboard side in the locker seat.
1 holding tank (option)	abt 40 l	on starboard side in the locker seat.
1 gas cylinder	abt 3 kg cylinder (Butane)	

1.1.6. Fixing points for cranes, resting-points for slipping and transport

Attention ! The rear webbing will be placed in the area of the sail drive

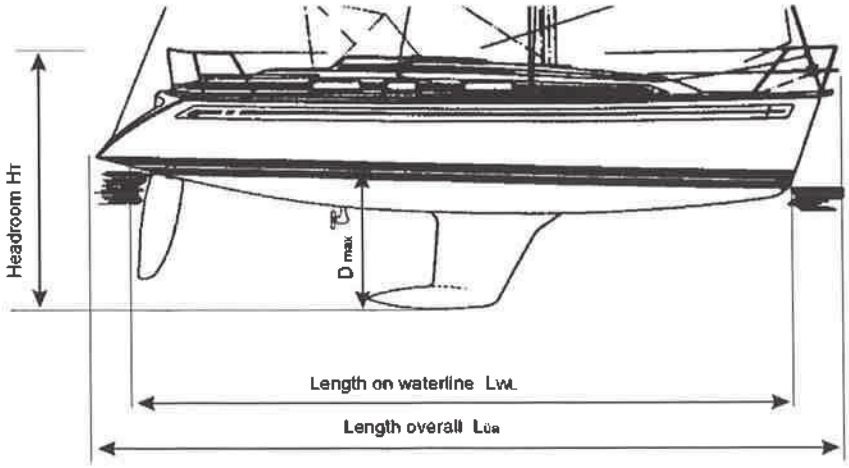

1.2 General arrangement

1.2.1 Rigging plan

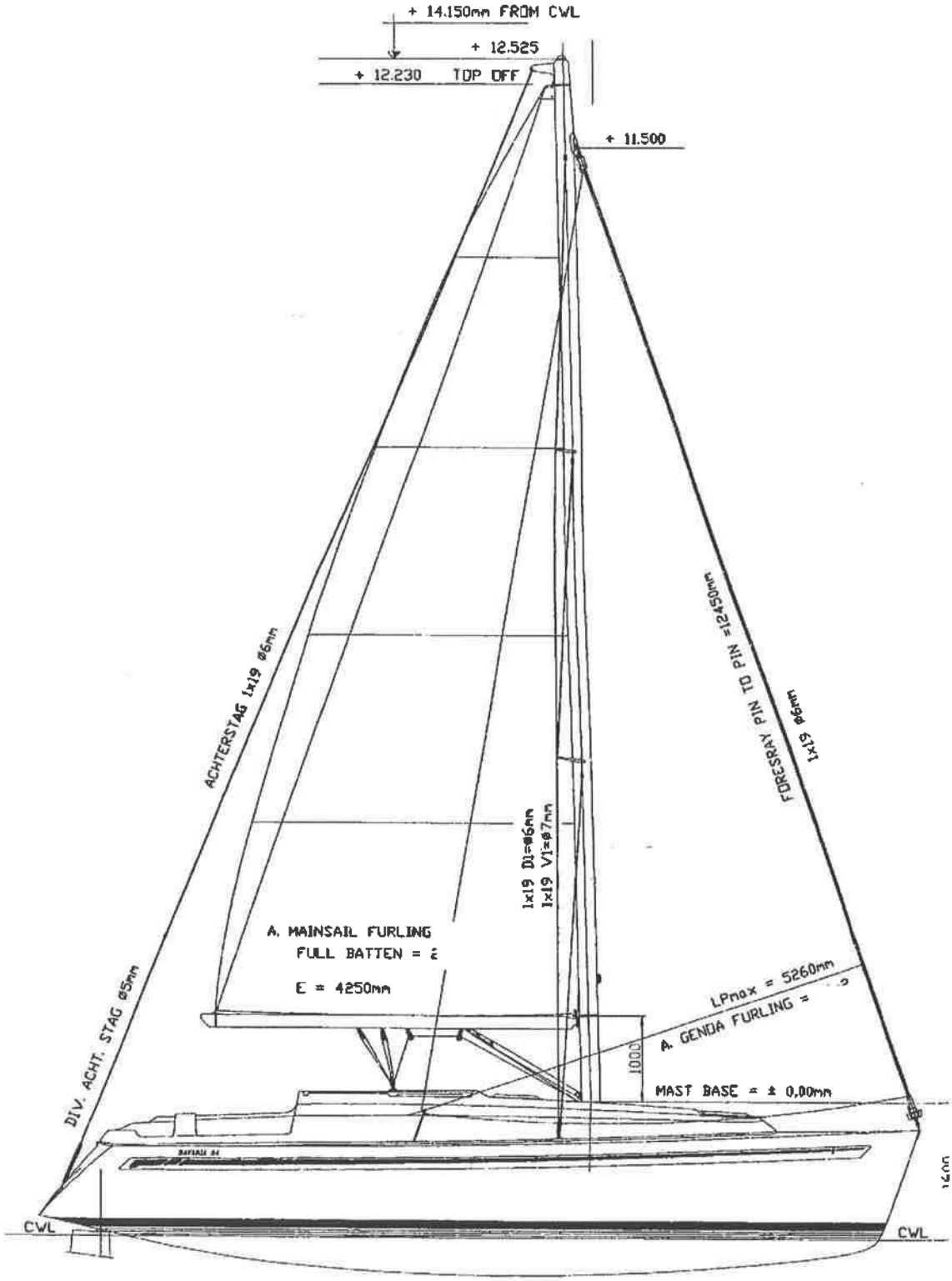

1.2.2 Deck arrangement

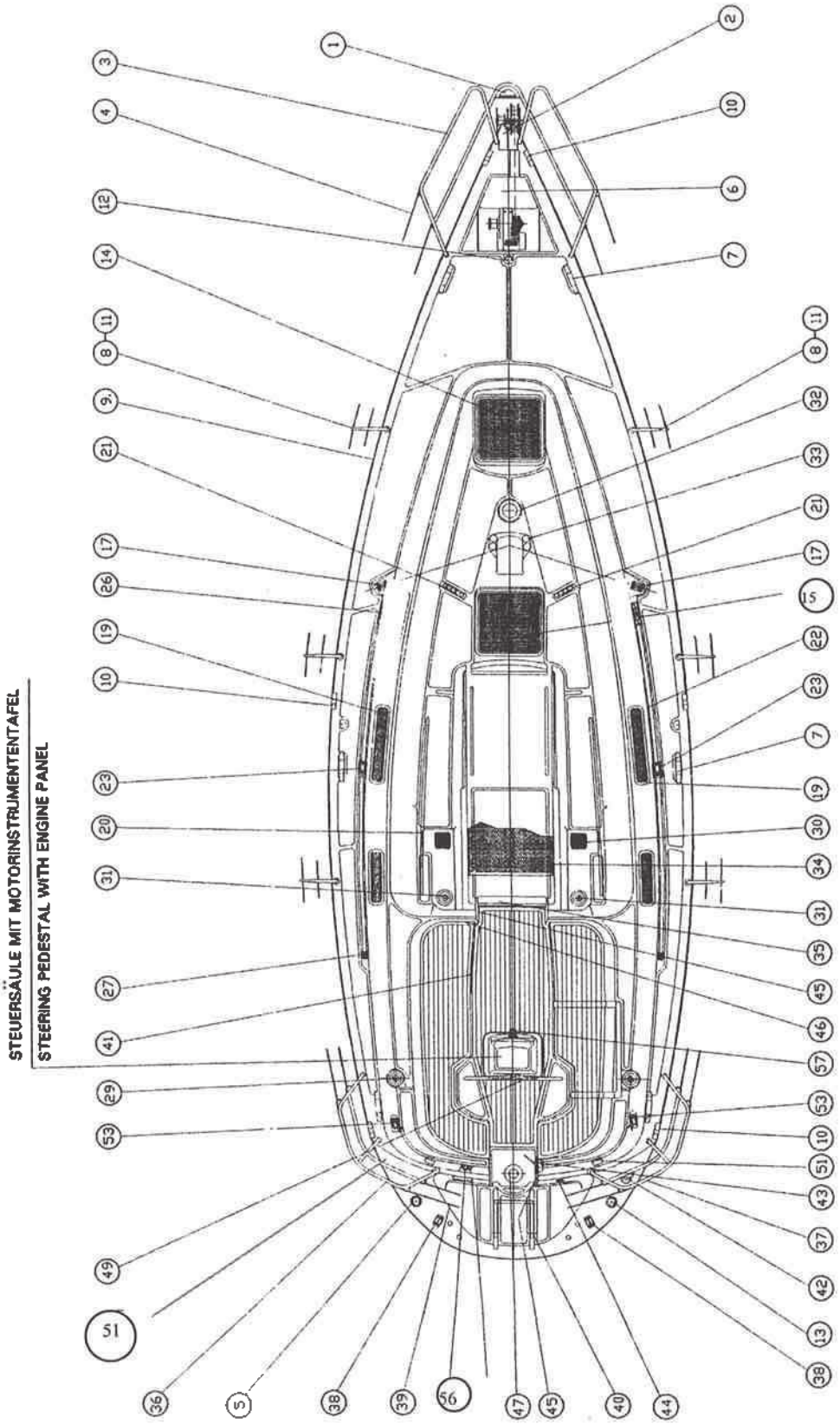

Explanations in the deck plan

	BAVARIA 31		
	DESCRIPTION	**BESCHREIBUNG**	**PCS**
1	Bow navigation light	Zweifarbenleuchte	1
2	Bow fitting	Bugbeschlag	1
3	Bow pulpit	Bugkorb	1
4	Life lines	Relingsdurchzüge	2
5	Water inlet	Wassereinfüllstutzen	1
6	Anchor chain bail	Ankerkasten	1
7	Mooring cleats	Belegklampe	4
8	Stanchion	Relingstütze	6
9	Toe rail	Fußreling	2
10	Passage (option)	Relingdurchgang (Option)	2
11	Stanchion base	Relingfuß	6
12	Toggle bolt	Decksauge (Option)	1
13	Fuel inlet	Dieseleinfüllstutzen	1
14	Hatch	Vorschiffsluke	1
15	Hatch	Salonluke	1
16			
17	Main shrows + aft kiwers cgk	Wantenpütting	2
18			
19	Opening portlight	Decksfenster	4
20	Grabrails	Handreling	2
21	Deckorganizer	Umlenkblöcke	2
22	Genoa track	Genuaschiene	2
23	Genoa track car	Genuaschlitten	2
24			
25			
26	Front endstop (g. track)	Vorderes Schienenendstück	2
27	Aft endstop (g. track)	Achteres Schienenendstück mit Umlenkblock	2
28	Endstops mainscheet track	Schienenendkappe	2
29	Genoa winch	Genuawinde	2
30	Stopper	Stopper	8
31	Halyard winch	Fallwinde	2
32	Ventilator	Deckslüfter	1
33	Trough deck cable fitting	Kabeldurchführung	1
34	Sliding hatch	Schiebeluke	1
35	Detachable bulkhead	Steckschott	1
36	Aft port pushpit	Heckkorb links	1
37	Aft Starboard pushpit	Heckkorb rechts	1
38	Backstay chainplatte	Achterstagpütting	2
39	Aft pushpit life line	Heckkorbsicherung mit Pelikanhaken	2
40	Swim ladder	Badeleiter	1
41	Cockpit portlight	Cockpitfenster	1
42	Stern light	Heckleuchte	1
43	Hand operater bilge pump	Handlenzpumpenhebel	1
44	Shore pick up 220 V (option)	Landanschluß 220 V (Option)	1
45	Engine ventilation inlet	Belüftungsroste für Motorenraum	4
46			
47	Emergency tiller fitting	Notpinnenbeschlag	1
48			
49	Steering wheel	Steuerrad	1
50	Shower	Cockpitdusche	1
51	Tank venting	Tankentlüftung	2
52			
53	Footblock with lockoff	Liegender Block mit Stopper	1
54			
55			
56	Backstay stopper	Stopper für Achterstag	1
57	Mainsheet block attacement	Großschotblock Pütting	1

1.2.3. Accomodation plan

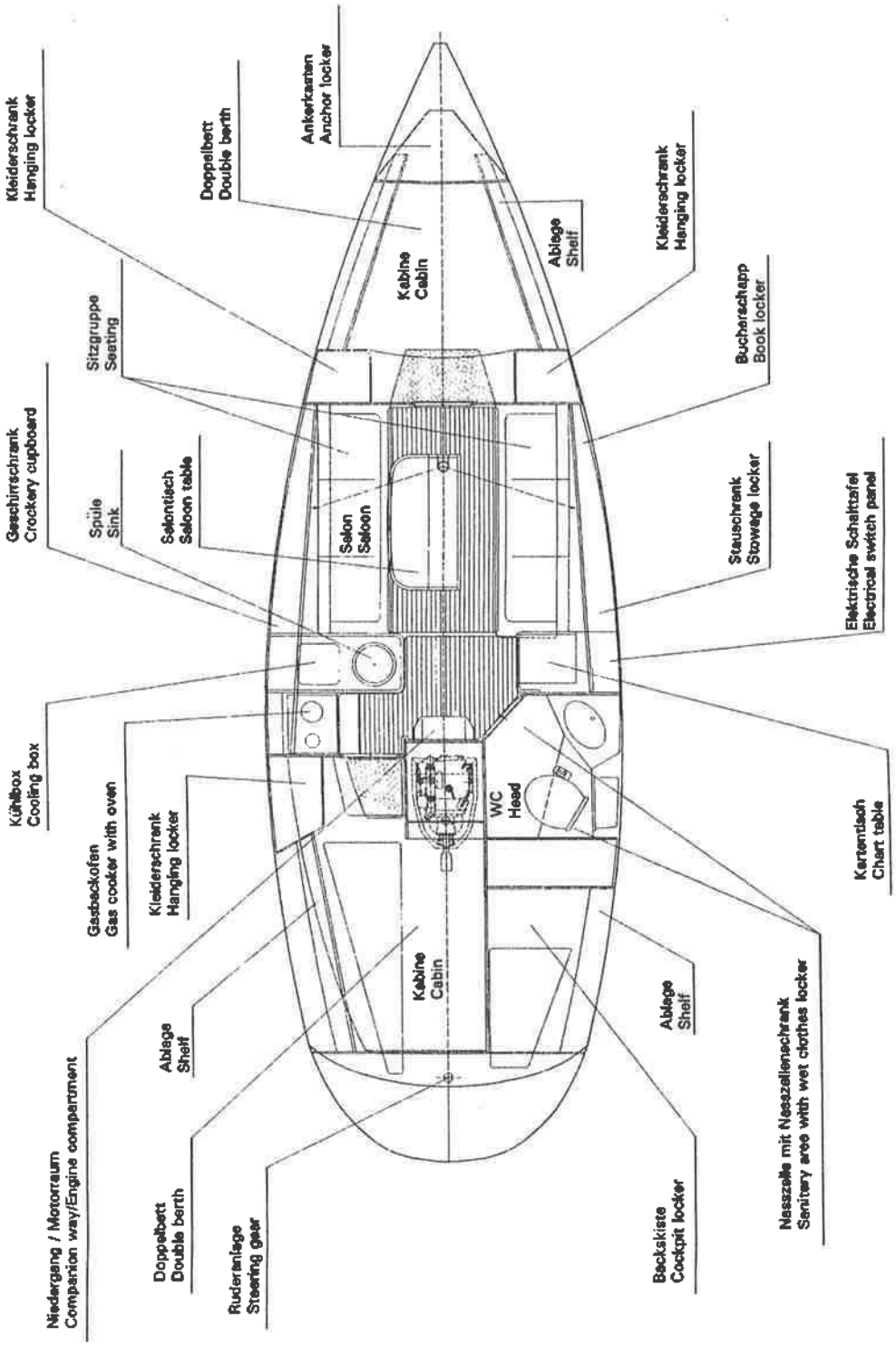

1.3 Drive systems

1.3.1 Sails

The SY Bavaria 31 is equipped with the following standard sails:

Main sail - standard	abt 24,20 sqm weight of cloth: 240 g/sqm
Main sail - fully-battened	abt 24,20 sqm weight of cloth: 240 g/sqm
Main sail " - mast reefing gear	abt 21,00 sqm weight of cloth: 240 g/sqm
Furling Genoa	abt 24,60 sqm weight of cloth: 240 g/sqm

1.3.2 Rigging

Mast length: 12525 mm; Length of boom: 4250 mm; Length of spreaders: 755 mm/ 1105 mm

Mast

- LM- Profile, without taper; – 18 deg. double spreaders , angular; - 2 halyards, topping- and boom lifts,
- tipping line and fittings.

Boom

- LM-Profile; - clew outhaul; - 2 reefing lines; - eye for mainsheet; - eye for tipping line.

Standing rigging (made of 1x19–lace, material 4401), consisting of:

forestay with excessive footage (headsail reef system)			1x
intermediate shroud	2x	permanent backstay	1x
lower shroud	2x	permanent backstay –bridle 7x19 braid	1x
upper shroud	2x	permanent backstay tackle	1x

Running Rigging

Inside the mast:
- Main halyard
- Genoa halyard
- Boom lift
- 3 additional tripping lines

Option:
- Spinnaker halyard (attached)
- Spinnaker uphaul
- Spinnaker downhaul

Inside the boom: 2 revving lines (battened sail); 1 clew outhaul

Complementing we refer onto the enclosed trim instructions of the manufacturer.

Caution

before of every sail: Test strings, cordage, lanyards and split pins. Safeguard the split pins through adhesive tape or bending. Transpose deformed or damaged bolts.

1.3.3 Motorizing, engine room, gear, propeller

This yacht is equipped with a inboard diesel engine with a sail-drive gear and a fixed propeller.
The engine room is separated from living quarters by plywood-bulkheads covered with sound-insulating material. An access is possible through:

- a shutter below the companion way,
- detachable bulkhead in the aftcabin beside the engine room

Cooling-water supply to the engine is realised via the saildrive-gear.

Engine plant

INSTALLATION MOTOR

1	MOTOR VOLVO MD 2020	ENGINE VOLVO MD 2020
2	MOTOR AUSPUFFSYSTEM	ENGINE EXHAUST SYSTEM
3	AUSPUFF-WASSERSAMMLER	EXHAUST WATERLOCK
4	[illegible]	[illegible]
5	KRAFTSTOFFRUECKFUEHRUNG	FEED BACK FUEL
6	DIESEL EINFUELLSTUTZEN	FUEL TANK FILLING HOSE
7	TANKENTLUEFTER	FUEL TANK VENTILATOR
8	KRAFTSTOFF FILTER	FUEL FILTER
9		
10	BELUEFTUNGSROSTE	VENTILATOR GRILLE
11	MOTORINSTRUMENTENTAFEL	ENGINE PANEL
12	MOTOR-FERNBEDIENUNGSKABEL	ENGINE CONTROL CABLES
13	MOTOR BELUEFTUNGSROSTE	VENTILATOR ENGINE
14	VORRATSGEBER FUER KRAFTSTOFFTANK	FUEL GAUGE

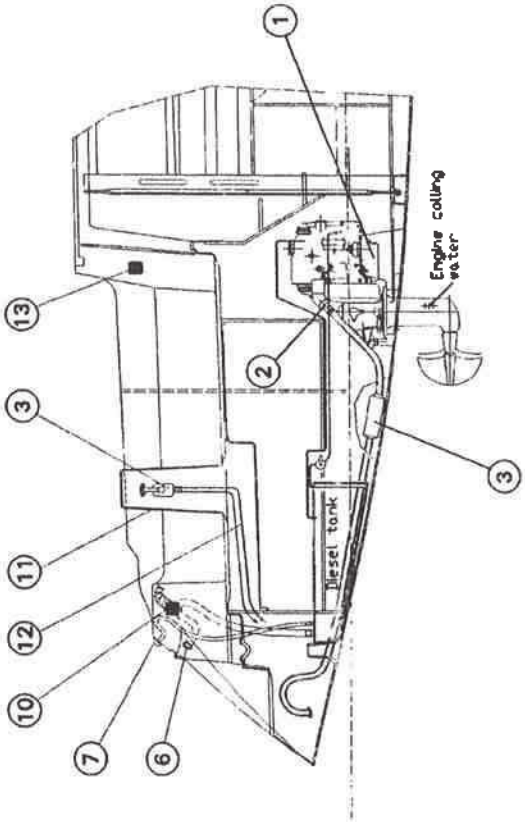

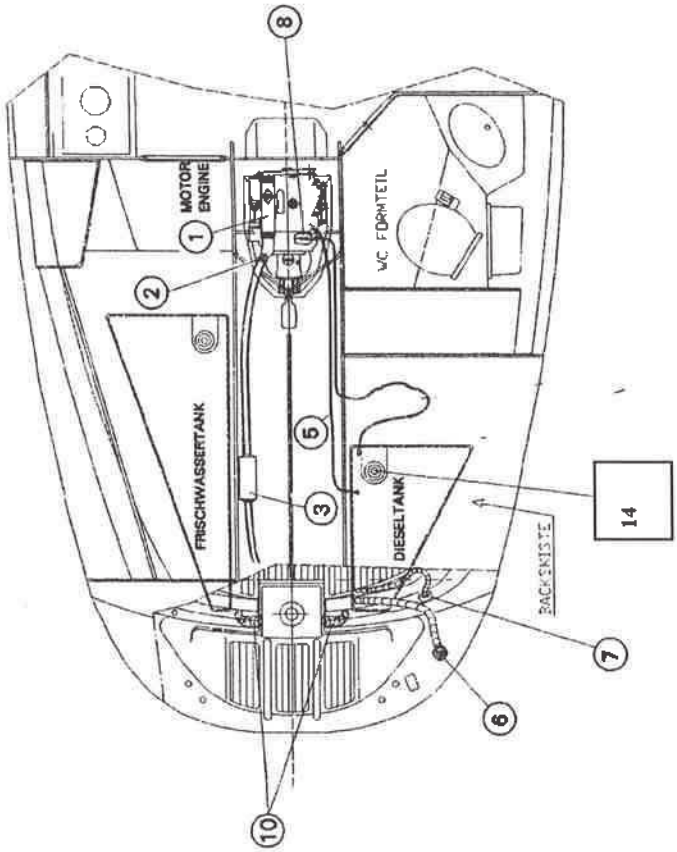

2. Installations and circuits

2.1 Tanks and piping - water

2.1.1 Fresh water, drinking water –cold

The yacht has a water tank in the aft with a capacity of 150 l. Fresh water is supplied via a water inlet (with a blue cover) at the transom, port side. You can take water from the tank over a hose connection leading to the pressure water-pump.

This pump, establishing the complete cold water circulation, is fitted below the pantry. An interruption of the operation of the pressure pump is done by cutting off all ducts. All pipes/hoses should be checked for leaks if the pump continuous working though all ducts were cut off properly.
The pump is protected by a filter which should be regularly checked and cleaned if necessary.

Components:

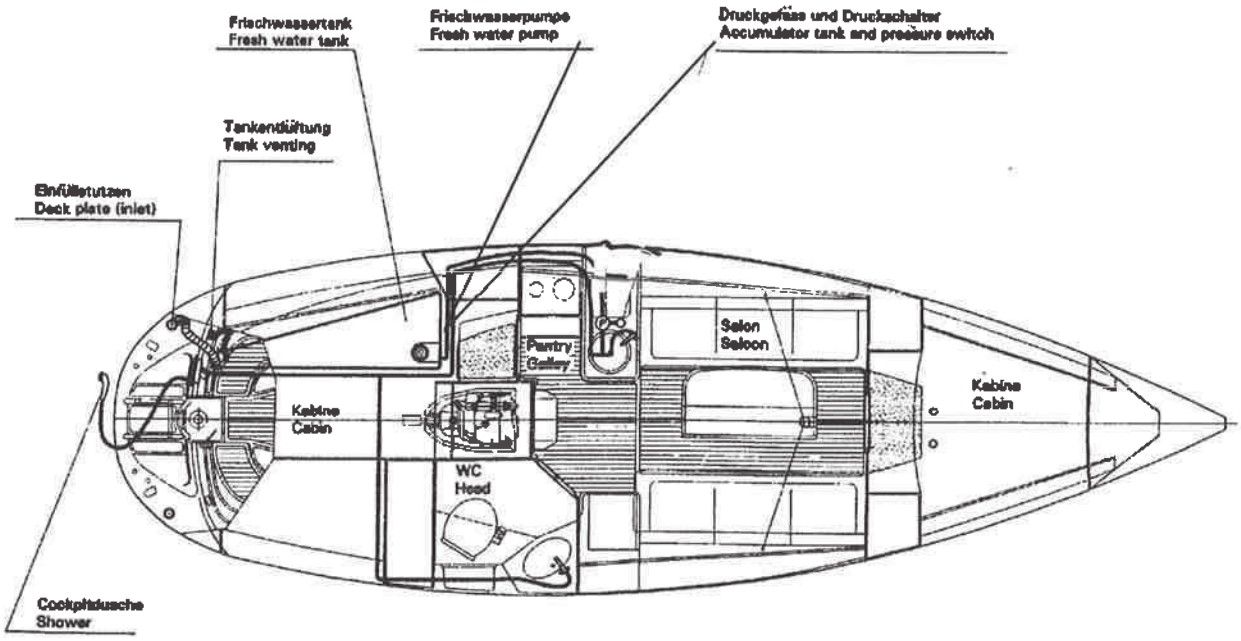

> **Note**
>
> Exchange the water in tank from time to time.
> Additionally you should use common purifiers.

2.1.2 Sea-water circulation

Sea-water is necessary for both WC flushing and engine cooling (see: 2.9).

2.1.3 WC –installation: see enclosed directions for use

Attention
If you are not aboard for a longer time you should close all sea-valves.

Components: WC-flushing

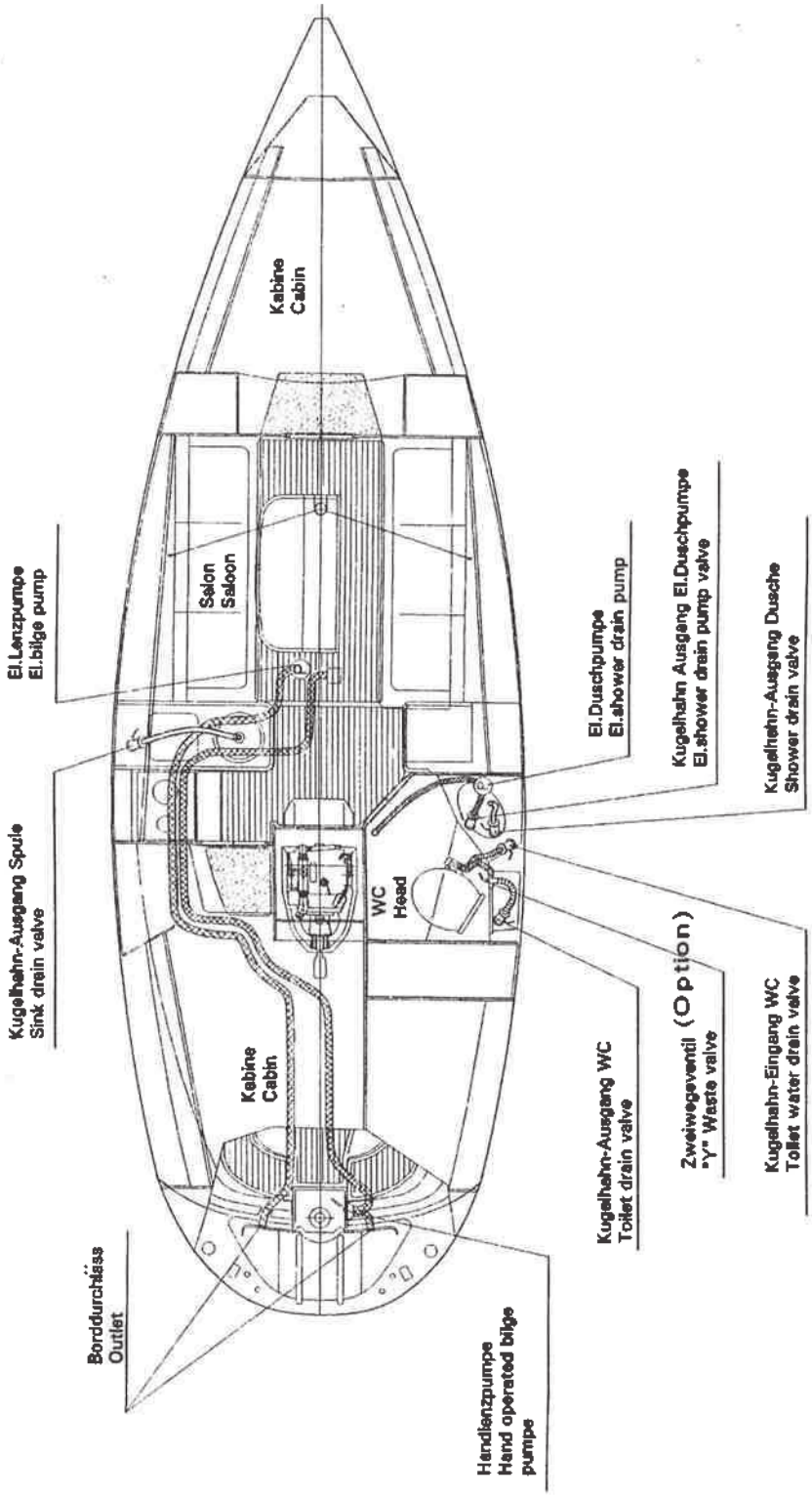

2.2 Tanks and piping - fuel

Storage tank

There is a 90 l plastic diesel tank with an inspection opening on starboard-side below the aft berths. It is filled via a fuel inlet with a red cover (marked with FUEL) at the transom of the yacht. The tank pickup is situated on the tank. The supply is made of a fire-proof fuel hose according to ISO 7840. The vent line is led to above deck.

Supply of the engine

The engine is supplied via a suction pipe from the upper edge of the tank. Due to the short distance a fire proof fuel pipe is used. This is led via a wide-meshed filter/ water separator, fuel pump and fine filter to the engine and then back to the tank.

Attention

A trouble free operation of the engine and heating is only possible, if the fuel is clean. That's why a regular inspection and cleaning of filter/water separator is unavoidable. The fuel tank should be completely emptied and cleaned once a year.

Warning

When refilling the tank:

- Switch off the engine, heating and stove !
- Do not smoke or use open lights !

Attention

If there is a danger of fire:

- Close the fuel stop valve immediately!

2.3 Steering gear

2.3.1 Description of the system

The rudder is a suspended, balanced hydrofoil midship rudder . It is operated by hand from the steering wheel at the steering post in the cockpit. Transmission of power is realised by means of rope pulls and fairleads to the rudder quadrant. With the autopilot (option) an electric motor installed.

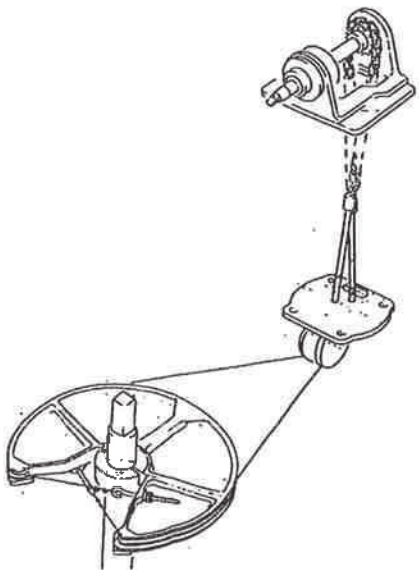

2.3.2 Rudder blade and rudder bearings

The rudder blade is a profiled one. It consists of a FRP-body. The rudder post with a diameter of 60mm is made of a sea-water resistant aluminium alloy and is laminated into the blade. The post runs in two easy-going and special rudder bearings. The rudder is fixed by a mounting clip at the upper end of the post that also serves for the keeping of the rudder tiller.
The mounting clip is additionally secured with a straight stud bolt on the rudder post.

Attention

Check regularly and repair if necessary:
- tight hold of the mounting clip on the rudder post

The rudder bearings used by **BAVARIA YACHTBAU** are self-setting bearings. Since rudder bearings are subject to wear and tear they should be inspected and maintained regularly.

Emergency tiller
The emergency tiller is stored in the starboard locker seat.
In case of emergency remove the steering wheel, the rudder quadrant for rope pulls and the quadrant for the auto pilot (option).
The emergency tiller to be mounted and secured at the top of the tiller wheel.

Attention
Please ensure a suitable bearing lubrication of the necessary parts of the rudder installation with water-proof lubricants (or Teflon).
Bearing clearance has to be avoided and can be adjusted at the top bearing.
The post must have no clearance but should not need heavy movements.

The steering wheel got a built-in brake, which you can fasten. Make always sure that this brake is not tight especially when sailing with the auto pilot. This would mean an overload for the electric motor .

The socket of the steering gear is integrated into the deck's form. On the socket there is the casing of the wheel hub. A chain is laid over a tooth-wheel of the hub. Both the rope pulls are run from the rudder quadrant via fairleads to the ends of this chain, where they are fixed crosswise by means of wire-rope grips, protected with an elastic covering.
Each end of the rope pulls has one shroud adjuster each fixed at the rudder quadrant. It is recommendable to check these ropes from time to time and to retighten if necessary.

2.4. Bilge pumps, bilge pipes

The chain locker is made watertight towards the yacht. It is self-bailing through two holes in the skin.
All **BAVARIA** yachts have got a self-bailing cockpit. The drain wells are placed at the rear and lowest part of the cockpit and are led outboard through the transom with hoses.

2.4.1 Description of the pumping arrangement
The yacht is equipped with both a manual pump and an electric bilge pump. The main line bilge suction has a capacity of 75 l/min.

A draw bucket is an ideal means for bailing out water . It should always be ready in a cockpit seat locker.

Attention
Close all sea valves if you leave your yacht for a longer period. Valves being not clearly visible, like e.g. in the toilet room, should only be opened before use and closed short after.

Warning
In a serious situation, e.g. in case of a heavy inrush of water as a consequence of a collision, the pumping capacity might not be sufficient. Take measures for damage control with collision mats or other suitable means.

Note
In case of spherical valves a transverse lever-direction indicates:
CLOSED
and a longitudinal ones means : OPEN

Maintenance note
The tightness of ducts should be inspected regularly.
Retighten all hose clips and the stuffing boxes of valves

Components of the bilge pumping installation:

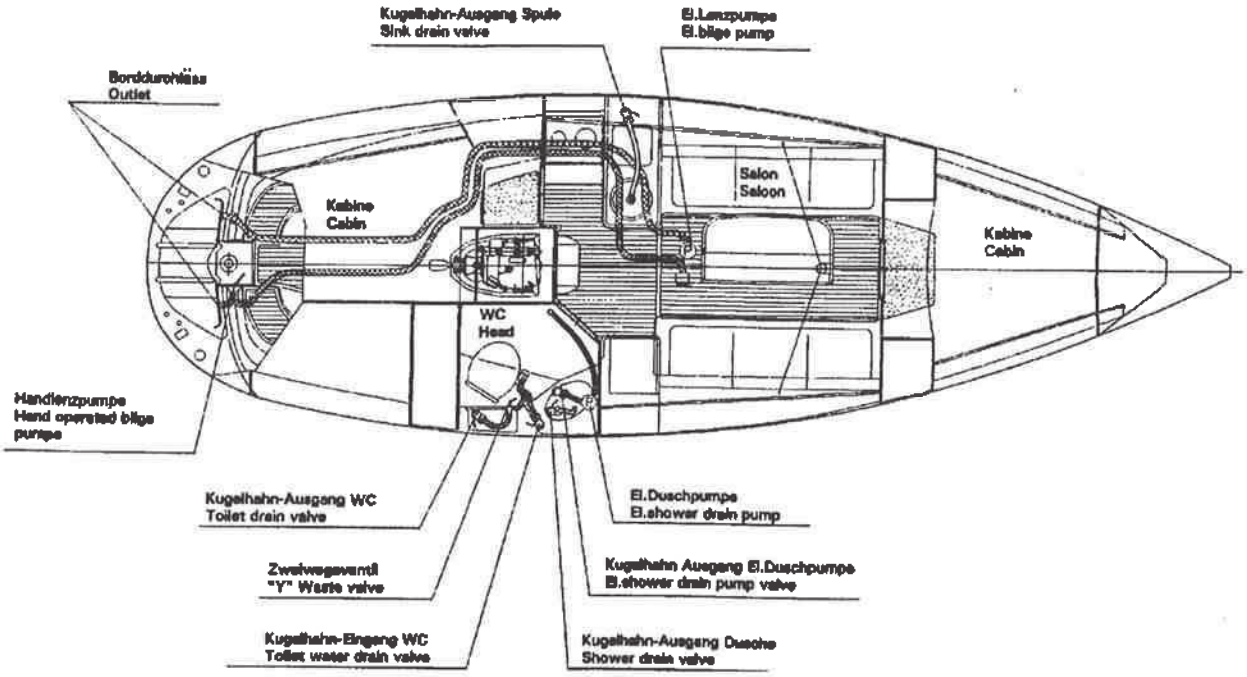

2.5 The electric installation

2.5.1 The AC-installation

The yacht has got a shore connection (option) by which it can be supplied with electric power from ashore when being berthed in a port. The plug box (meeting the CEE-norm) is installed at the transom of the yacht. The power is supplied into a shore connection unit, placed under the chart table.
The plug box is operational as soon as the shore supply cable has been plugged in. It only serves the operation of electric machines.

2.5.2 The DC–board net

All electric devices aboard are supplied with the 12 V DC. A main-switch is installed in the electric panel at the chart table. Power distribution is effected by a switchboard above the chart table.The lettering next to each switch refers to the corresponding consumer.

You can find all the switches for the 12 V consumers at the switchboard. By this you can operate different consumer-groups ,being marked with logos or lettering, separately. Some of the switches are designed for an installation of additional electric devices. There are only automatic fuses used. So you only have to press them in case of a breakdown. If a fuse blows repeatedly you should spot the cause or consult a specialist (electrician).

2.5.3 Operating the installation and specific features

The combination of an AC- with a DC installation offers a clearly higher comfort but requires some special knowledge.

Charging the batteries

All batteries are maintenance–poor and drain-protected. They are charged via a buffer diode by the motor-generator. Charging the starter battery always takes priority to ensure a safe start of the engine.

AC–consumers

The only fixed link is the one to the battery charger. The safety contact plug-box at the electric panel is designed for electric tools to be used for small repair work.

DC–consumers

The essential consumers are:

- navigation lights
- engine displays
- VHF-radio wiring (option)
- devices for comfort
- bilge pumps
- tank display
- electronic devices

Navigation lights have absolute priority. In case of a lack of capacity all other consumers have to be switched off first. By a stand-by operation of the engine, even when under sail, the batteries can be brought up rather quickly. After a while you can switch on the other consumers again.

2.5.4 Important warnings on the DC-installation

Attention

You should never
- work at the electric installation if it is in operation,
- alter fuses or overload switches,
- change the electric wiring and/or wiring plans; this has to be done by specialists only,
- install electric devices or add parts that exceed the allowed load limit,
- leave the yacht unattended with the electric installation in operation. This does not go for automatic bilge pumps, fire protection and –alarm devices.
- As long as the diesel engine is in operation, you must not disconnect the 12 V charging circuit.

Before starting a voyage you should always check
- the battery voltage,
- the correct function of navigation lights .

Have spare lamps for all navigation lights aboard.

2.5.5 Important warnings on the AC-installation

Attention

- the electric wiring of the yacht and/or corresponding wiring plans must not be changed.
- Service and maintenance must be carried out by a qualified specialist.

Warning

To avoid the danger of a rush of current or fire :
- The shore connection cable must never hang into water.
- Plug the shore connection cable first aboard and then ashore.
- Do not alter plugs of shore connection cables

Disconnecting the shore connection cable:
First disconnect the shore connection cable ashore and then aboard.

2.5.6 Distribution of electric devices:

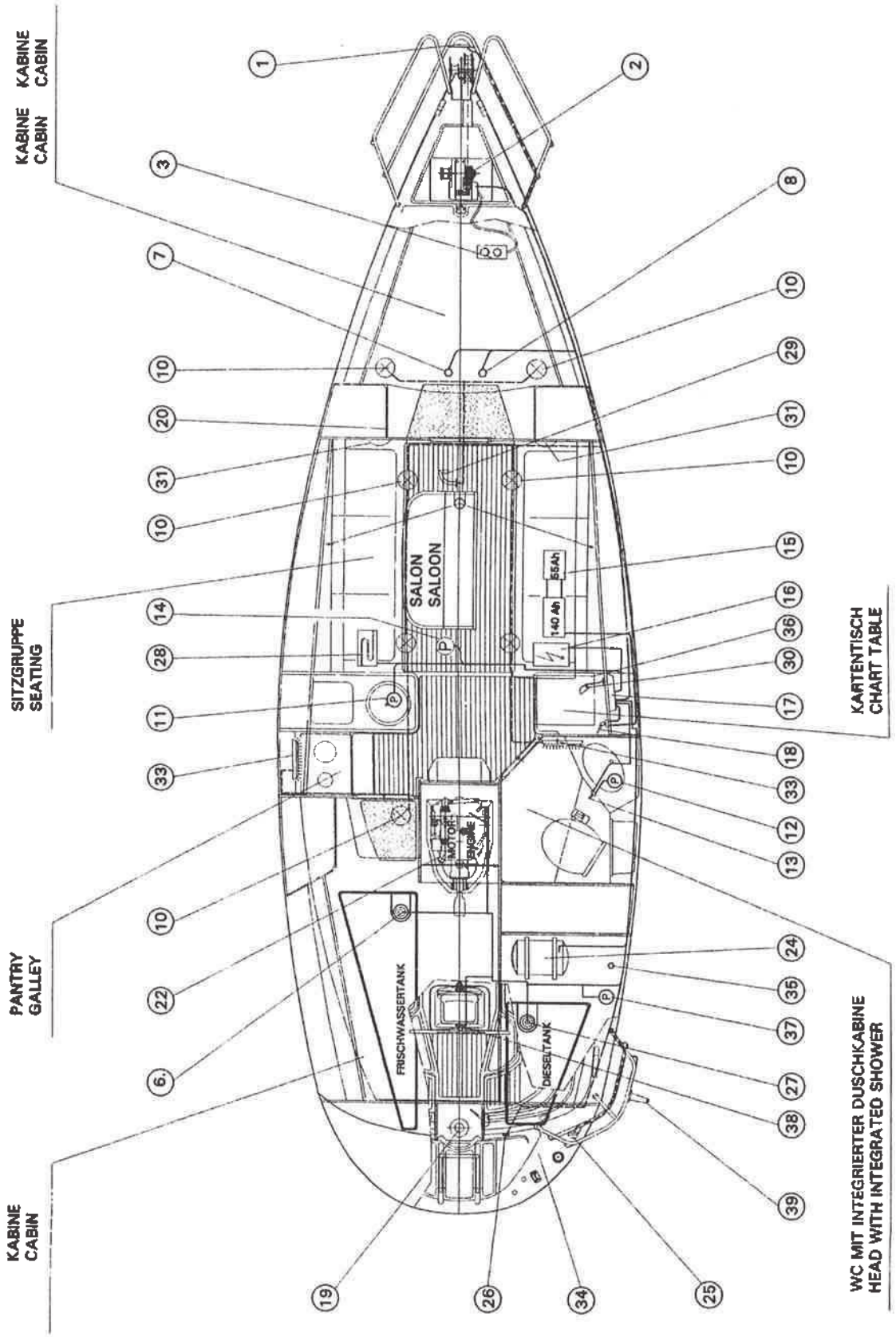

Explanations on the distribution of electric devices

	BAVARIA 31			
	Description	**Beschreibung**	**Stück/ PCS**	**Kabel/Wire**
1	Navigation light	Zweifarbenleuchte	1	2 x 2,5
2	Windlass (option)	Elektrische Ankerwinde (Option)	1	2 x 25
3	Windlass switch (option)	Ankerwinde - Bedienteil (Option)	1	
4				
5				
6	Fresh water gauge	Messgeber für Frischwassertank	1	5 x 0,75
7	echo depth sounder	Echolot – Geber	1	
8	hull speedometer	Sumlog – Geber	1	
9				
10	Ceiling light	Deckenleuchte	7	2 x 2,5
11	Fresh water pump	Frischwasserpumpe	1	2 x 2,5
12	Shower drain pump (option)	Duschpumpe (Option)	1	2 x 6
13	Shower pump switch (option)	Duschpumpenschalter (Option)	1	2 x 6
14	Bilge pump	Lenzpumpe	1	2 x 6
15	Batteries group	Batterie		
	Engine battery 55 Ah	Motorstromkreisbatterie 55 Ah	1	70
	Board battery 140 Ah	Bordstromkreis-Batterie 140 Ah	1 o. 2	70
16	Battery charger (option)	Batterieladegerät (Option)	1	1 x 10; 2 x 2,5
17	Electric panel	Elektro Paneel	1	
18	Main switch	Batteriehauptschalter	1	95
19	Auto pilot (option)	Autopilot (Option)	1	2 x 2,5
20	Electronic compass (option)	Elektronischer Kompaß (Option)	1	5 x 0,75
21				
22	Engine start	Anlasser	1	70
23				
24	Water heater (option)	Boiler (Option)	1	3 x 1,5
25	Stern light	Heckleuchte	1	2 x 2,5
26	Shore connection 220 V/110 V (option)	Landanschluß 220/110 V (Option)	1	3 x 1,5
27	Fuel gauge	Messgeber für Kraftstofftank	1	5 x 0,75
28	El. refrigeration (option)	El. Kühlschrank (Option)	1	2 x 6
29	Cable opening (navigation light)	Kabeldurchführung	1	4 x 2,5 + VHF
30				
31	Speaker (option)	Lautsprecher (Option)	2	2 x 1,5
32	Engine room light	Motorraumlampe		
33	Neon lamp	Neonlampe	1	2 x 2,5
34	Air heater (option)	Heizungsfühler (Option)	1	2 x 1,5
35	Air heater – fuel pump (option)	Heizungsdieselpumpe (Option)	1	2 x 2,5
36	Air heater – thermostat (option)	Heizungsthermostat (Option)	1	2 x 6
37	Waste water pump (option)	Fäkalienpumpe (Option)	1	2 x 6
38	Engine instrument panel	Motorinstrumententafel	1	
39	Radio antenna (option)	Antennenkabel (Option)	1	VHF

2.5.7 Wiring plans

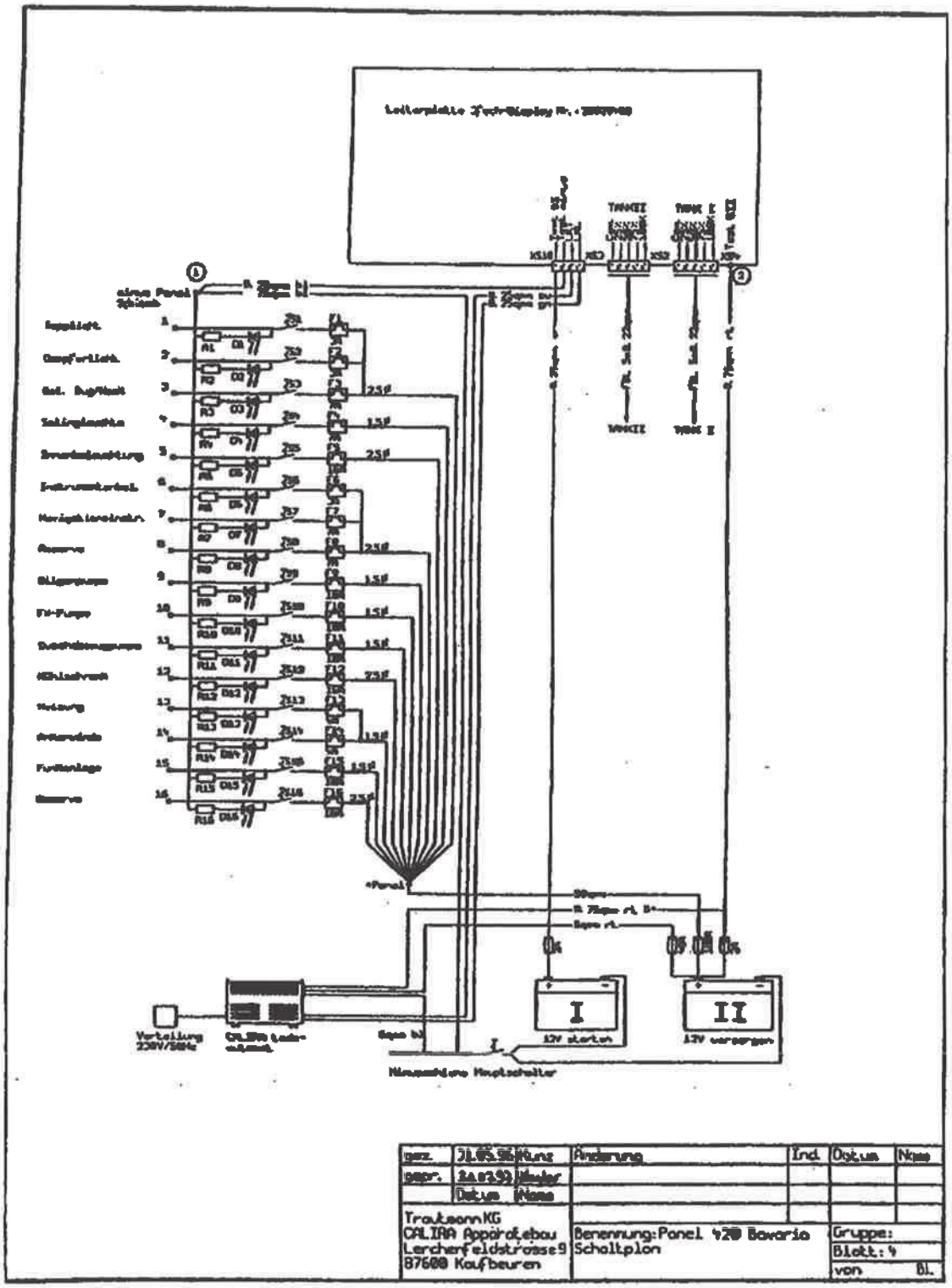

2.5.8 Distribution plans

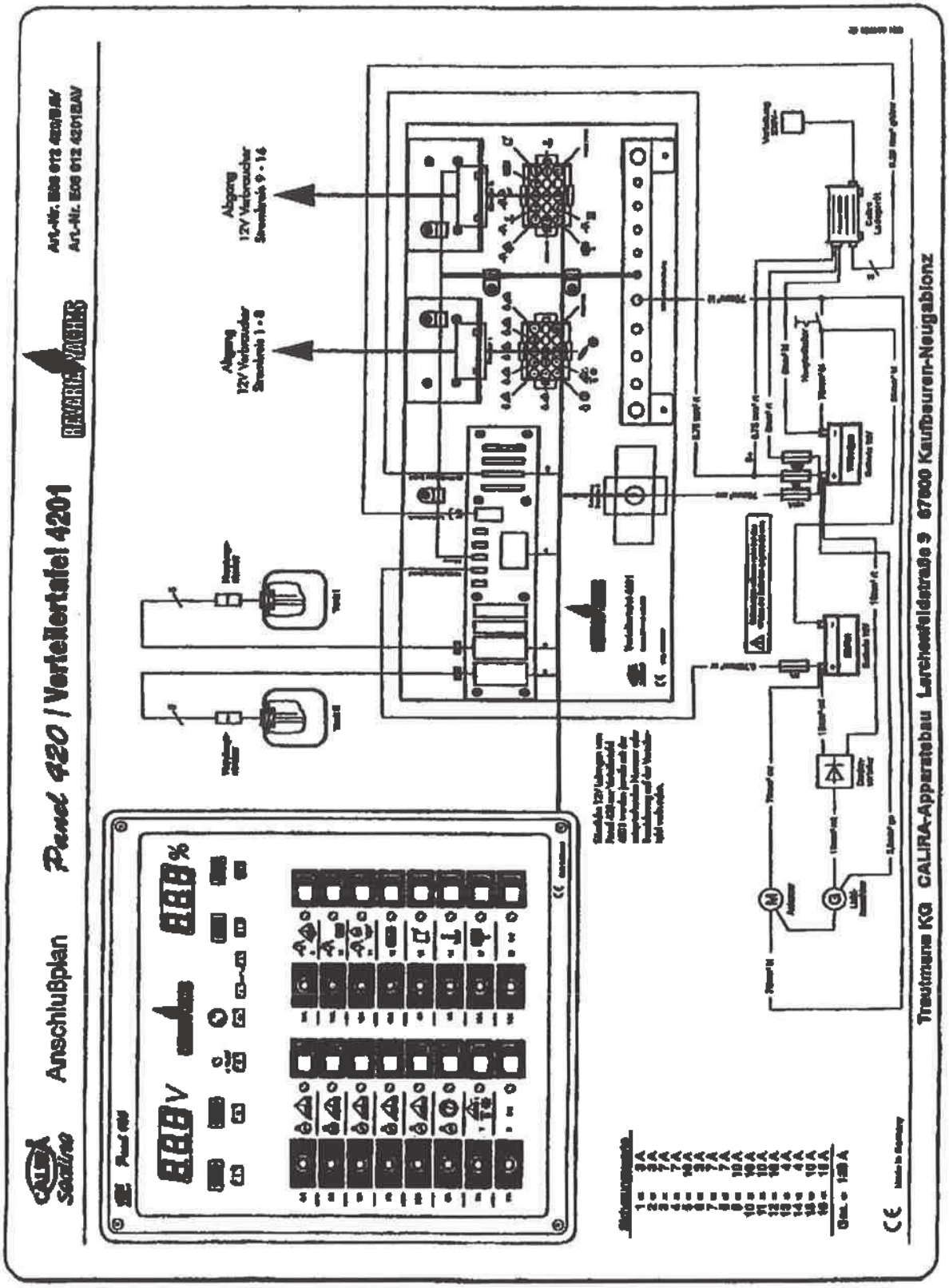

2.5.9 AC-distribution

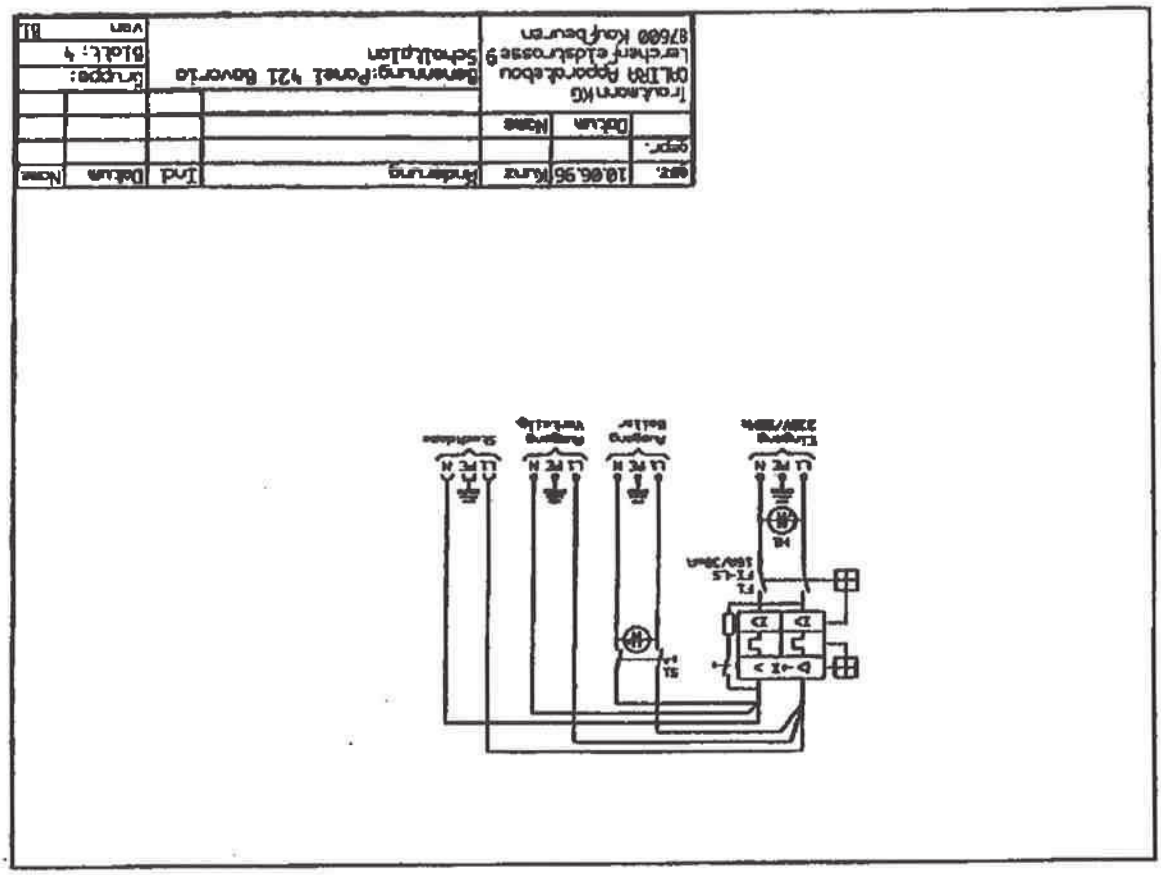

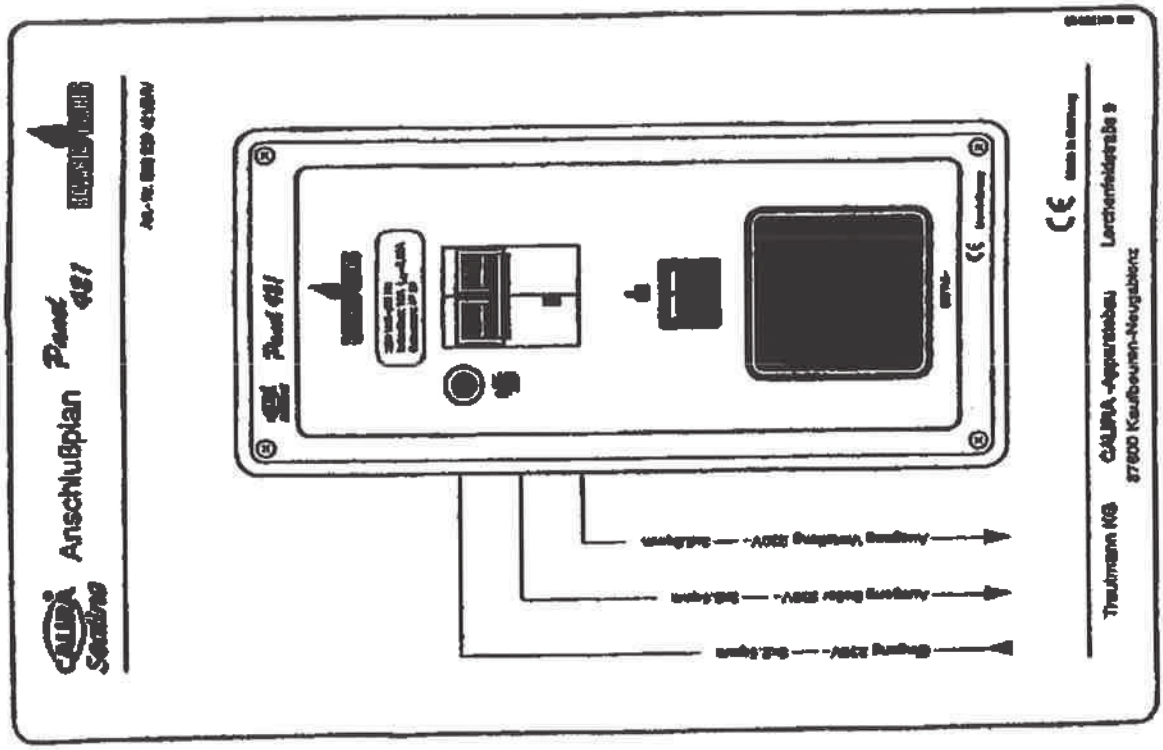

2.6 L.P.G. installation

The gas installation for the stove meets the European norm EN 10239. The test-certificate is attached.

The gas pipe leading to the stove from the standard 3 kg–gas cylinder is an 8 mm copper pipe. It is placed into a self-bailing casing moulded into the deck in the rear cockpit area. All gas pipes have been installed according to the German safety regulations. The best-by date for the soft connection hoses between the gas cylinder and the copper pipe and between copper pipe and stove is printed onto the hoses. They have to be replaced after the expiry date.

The reducing valve in the gas cylinder casing has a service pressure of 30 mb. The flow rate is 1 kg/h.

2.6.1 The components

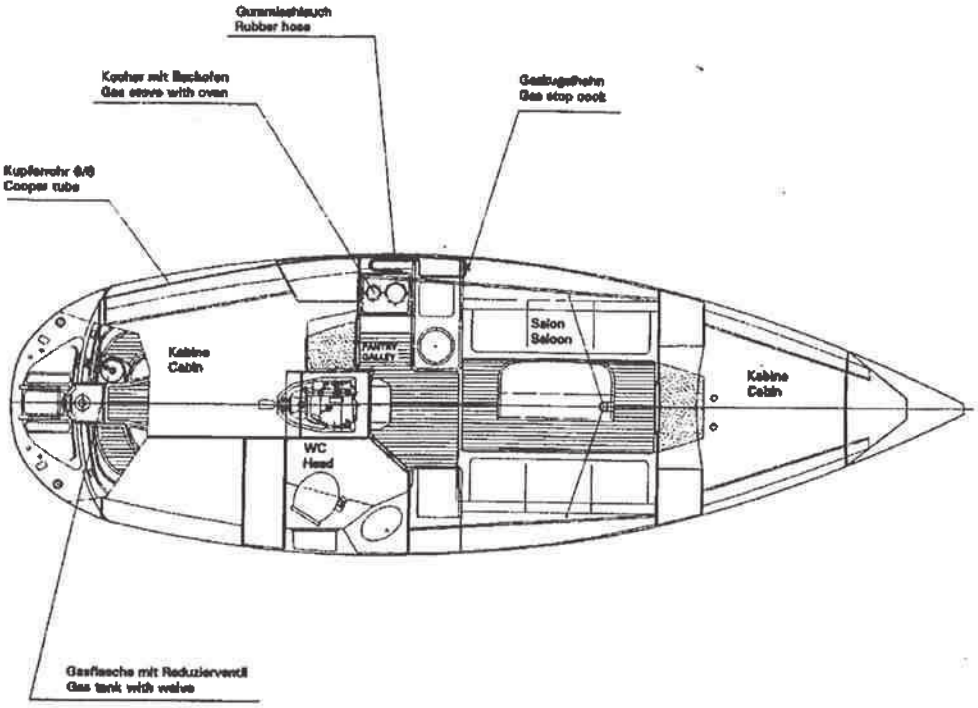

2.6.2 Operation

Gas installations require care. That's why you should follow this sequence:

Attention

- Open the stop valve in the gas cylinder casing
- Open the valve before the stove
- Open a stove valve and lighten the gas
- Keep the valve open until the glow timer allows further burning.

Attention

For finishing follow the same (above mentioned) sequence from the valve in the gas cylinder casing to the stove valve to allow all gas in the piping to escape and burn.

Attention:

- Do not use liquids containing ammonia for checking the pipe.
- Never handle with open light and do not smoke if you look for leakage or if you connect a new gas cylinder.

2.7 Fire protection

The well-known sources of danger on board are the stove in the pantry and the engine room.
If, despite all precautionary measures, a fire should break out aboard, there are three fire extinguishers an board which are fixed at the following places:

Nr. 1 and 2 : **Powder extinguisher** in the starboard locker seat, at least fire grade 10A/68B
Nr. 3 : **Powder extinguisher** at the mess tables foot, at least fire 10A/68B

Additionally you should place in the pantry a light **fire retarding cloth,** which is made of glass cloth and is very useful in the case of fire caused by overheat fat.

Caution
Test the fire extinguishers regularly!
Train yourself as regards fire fighting.
Consider always the seamanlike care duty.

2.8 Anchor-, towing- and warping facilities (option)

Anchor (option)
The bower anchor (plough anchor), abt. 17 kg, hot-galvanised, (is known for its high holding power). It lays ready-to-fall in an anchor stowage device and is secured with a bolt. The chain (option) has a length of 50 m and a nominal thickness of 8 mm. It is run out by an electric anchor windlass (option) operated with a remote control. The remote control is placed in the chain locker before use and its function is activated at the switch board.

Furthermore it is recommendable to have a stern anchor as well as sufficient mooring- and towing lines with the necessary strength on board.

1 stern folding anchor (4-fluke grapnel anchor) , 12 kg, hot-galvanised, fixed at the aft guard-rail. 6m chain forerunner, thickness 7 mm, 34 m polyamide anchor rope, 18 mm, 3-strand hawser laid. It is stored in the port transom seat.

The rope is cleated aft.

2.9 Engine cooling system

Engine cooling
The engine has got a two-circuit cooling system. Water enters through the saildrive, is led to the heat exchanger and then injected into the exhaust gas pipe. Together with the exhaust gas the cooling sea water is exhausted via the silencer and the exhaust pipe at the stern. This guarantees a trouble-free engine operation. Moreover the engine noise is reduced.
All hose connections of the system a secured with double stainless steal clips.

Attention
- Check and clean the sea water filter in regular intervals, depending on the water quality.
- Before starting the engine make sure that the cooling water inlet is open.
- Have a short look into the engine room for possible leakage.
- When the engine is running it is highly recommendable to check regularly if cooling water is escaping with the exhaust gas.

2.10 Exhaust gas system
The yacht is fitted with a "wet" exhaust gas system, i.e. cooling sea water is injected into the exhaust gas elbow causing a cooling of exhaust gases. This mixture is led down into a silencer/water lock, runs through a pipe in the locker seat on the starboard side of the aft cabin, is led upwards at the stern and escapes to the side above the water-line.
The exhaust gas hose consists of a synthetic rubber material with an integrated steal spiral.
The hose is heat-resistant (for some time) and should be checked and replaced if necessary.
A constant flow of sea water has to be guaranteed. The hose is secured at its joints with two clips.
If there is an interruption of the sea water flow, the temperature sensor in the exhaust gas hose will release an visual and acoustic warning. In this event you should stop and switch off the engine immediately until the problem has been settled (see manual of the engine manufacturer).

Attention:

A regular Inspection if saltwater comes out of the exhaust, is urgently advisable.

2.11 Ventilation/Airing
We have taken the following measures for a proper ventilation of all rooms:

Chain locker
A certain ventilation is achieved through the hawser port in the cover of the chain locker and through its bilge holes.

Living cabins/ Salon and forward quarter
One ventilator

Engine room
Two openings in the aft area of the cockpit, two suction openings next to the companion hatch.

Aftcabin
1 side light /bull's eye showing to the cockpit

Components:
1 deck ventilator, 4 side lights, 2 folding hatches

2.12 Board ducts, sea water valves
Openings below the water line are possible weak spots. That is why we pay special attention to them.
All board ducts in the underwater part, with the exception of the duct for the transmitter of the echo sounder, consist of brass-made screwed joints with spherical sea valves and hose nipples.
All hose connections are secured with two clips each.
For the cockpit drain special plastic joints are used.

Attention
Close all sea valves if you leave the yacht for a longer time. Valves being not clearly visible, like e.g. in the toilet room, should only be opened for use.

Maintenance note
The tightness of board ducts should be inspected regularly.
Check and retighten all hose clips and stuffing boxes of valves if necessary.

Note
In case of spherical valves a transverse lever-direction indicates : CLOSED
And a longitudinal direction means : OPEN.

Board ducts:

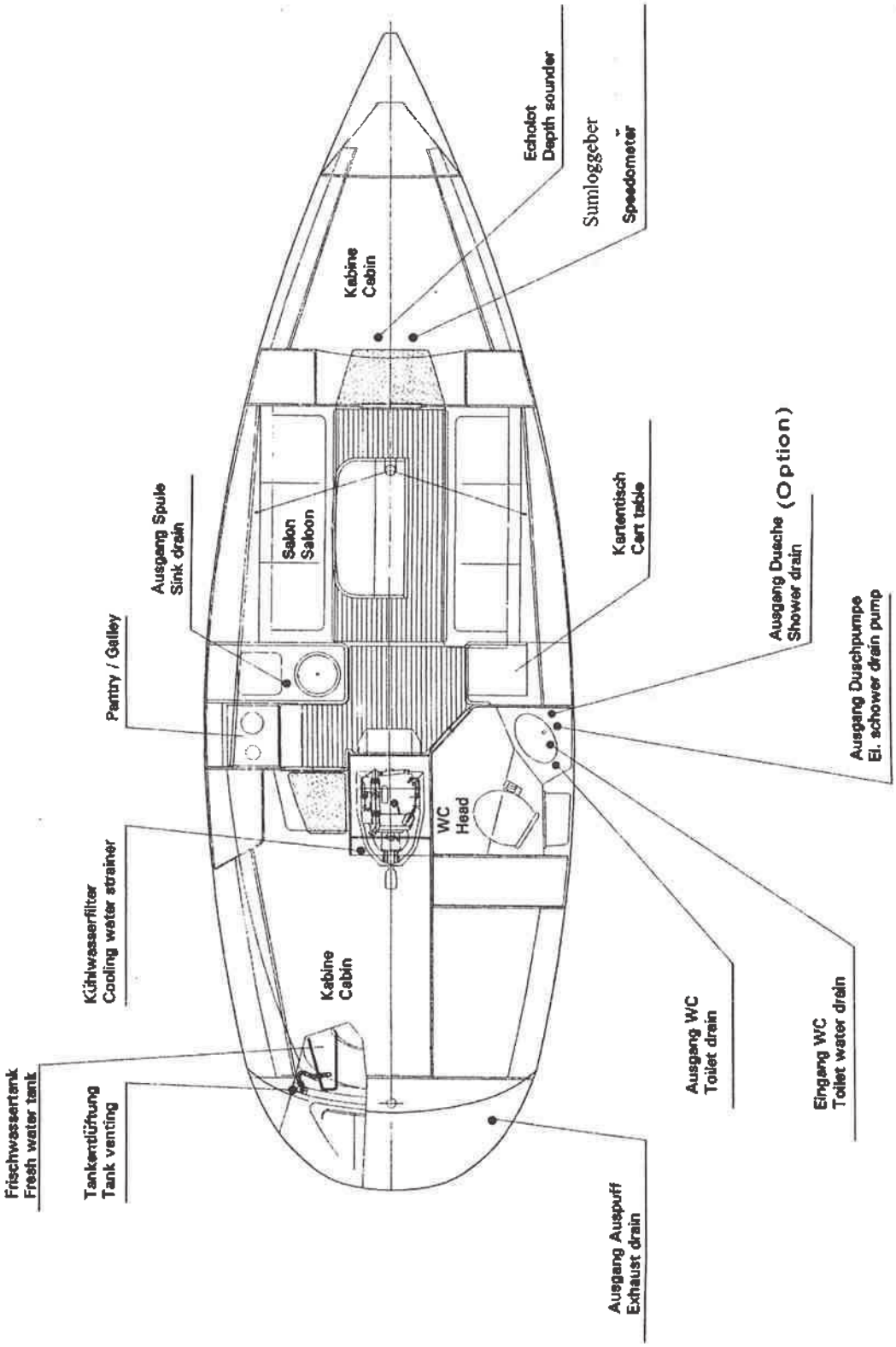
Echolot
Depth sounder
Sumloggeber
Speedometer
Kabine
Cabin
Ausgang Spüle
Sink drain
Salon
Saloon
Kartentisch
Cart table
Ausgang Dusche (Option)
Shower drain
Pantry / Galley
Ausgang Duschpumpe
El. schower drain pump
WC
Head
Kühlwasserfilter
Cooling water strainer
Kabine
Cabin
Ausgang WC
Toilet drain
Eingang WC
Toilet water drain
Frischwassertank
Fresh water tank
Tankentlüftung
Tank venting
Ausgang Auspuff
Exhaust drain

3. Environmental protection

BAVARIA YACHTBAU has already met the legal requirements referring to exhaust gas regulations with its choice for the inboard diesel installed. An exhaust gas type-examination certificate can be handed in or sent on later.

3.1 Fuel and oil

You should be especially careful when filling the tank. A (wet) cloth around the fuel inlet can prevent fuel from dripping into water. In your engine manual you can also find a diagram with a curve about the specific fuel consumption thus offering you some good hint on the most favourable engine speed.

For a necessary exchange of oil you should use a suction pump, because you cannot drain it off like a car. The oil has to be exchanged at least once a year, even in case of a little operation time of the engine.
A well-maintained engine should never leak. But in order to prevent even smallest amounts of oil being discharged overboard with the pumped out bilge water, the engine bed has been designed in form of a closed oil sump. All water from this sump, being possibly mixed with oil, has to be pumped into a separate canister and has to be deposited ashore.
In any case there should be oil-binders aboard.

3.2 Waste

For all water sportsmen it goes without saying: waste is not thrown overboard. This is also true for biodegradable waste. There should be a regular waste bag or –bin in a locker seat.

3.3 Sound

The wet exhaust pipe of the diesel engine reduces the engine sound considerably. Additionally rubber bearings, elastic couplings and the engine room insulation minimise sound emissions. Nevertheless you should not turn up the engine too quickly and, please, reduce the engine speed in waters with dense traffic.

3.4 Swell

Natural bank areas are sensitive against swell. Please keep sufficient berth. Formation of waves, caused by your yacht, is an indicator of where and when you should reduce your speed to avoid unnecessary swell. Pay attention to relevant signs.

3.5 Exhaust gas

Check the escaping exhaust gas regularly. The exhaust gas should show neither black smoke nor blue clouds. In such a case you should either clean the air filter or have a repair shop readjusted the engine.

3.6 Antifouling coatings

The underwater part of the hull of each yacht has to be protected with an antifouling coating because marine growth means more energy for propulsion. Today there is a wide range of protective paint with various effects for different bodies of water. Trust the recommendations of specialists for your decision.
Coatings that are effective for years without any grinding in between are especially recommendable.
But if the coating has to be sanded to some extend you should arrange these activities with the port officials. Generally the ground under the yacht has to be covered with some plastic cloth to collect the rubbed down dust and dispose it .

3.7 Varnish removers

Most varnish removers contain aggressive substances and should not be used or as little as possible. A mechanical removal of paint is the much better way.

4. Maintenance

4.1 Maintenance, cleaning
1. Mast and rigging
See: Notes of the manufacturer

2. Sails
The sails are made of Dacron. This material is very robust and resistant. Thus the sails keep their form for a very long time.
Inspect all your running and standing rigging carefully for sharp edges, splints, protruding ends of wire and the like because laminated cloth is especially sensitive against touching them. Those parts of the cloth that can chafe at spreaders or shrouds should be protected on both sides by sticking self-adhesive cloth to them. The same goes for the foot of the sail if there is the possibility of chafing at the rails.

Note:
- Please remember: Damage to the cloth is mainly caused if it is incorrectly treated or handled. Especially if you let it shake, expose it to UV rays constantly or store it improperly.
- If there are any questions on the cloths do not hesitate to contact the manufacturer or your sailmaker.
- Never remove track cars with ball bearings from the tracks carelessly. Always use sheet tracks with endstops.

Cleaning
Please clean your yacht immediately after you have taken it out of the water. High pressure cleaning devices will remove any growth. This is followed by an upkeeping of the surface of the yacht. All paint manufacturers provide detailed instructions for their coating systems.
For ships sailing in salt waters: remains of salt absorb water and can cause a faster corrosion. Where- and whenever it is possible you should rinse the yacht and parts of it with fresh water.

4.2 Wearing- and spare parts
As an experienced skipper you will not have difficulties in getting original spare parts. If you need any help, please contact the yard.
If you need any spare parts but cannot get the original ones you have to pay attention to the stability values to keep the yacht at the high technical standard it used to have at the time of delivery.

4.3 Repair work
In need of repair of the hull you may consult a reliable workshop. The interior construction was designed in such a way that a non-destructive elimination of defects can be realised.
In regard to the technical equipment you may contact a reliable work shop or the shipyard, too.

4.4 Winter storage
We have already given some well-directed advice on winter storage in different paragraphs of this manual. Generally speaking all firms offering winter storage should meet the latest technological standard as far as environmental conditions, storage blocks, fire protection and accessibility of your yacht is concerned. Moreover there should be fixed rules for work, done by the owner himself, to prevent any interference with other sportsmen.

If possible the following objects should be taken from board and stored in a dry and frost-free place:
- Ship's papers and other relevant documents
- Charts, books and instruments
- Mattresses, upholstery, blankets and sleeping bags
- Sails and lines/ropes

- Foodstuffs
- Gas cylinders
- Safety equipment
- Life raft and rubber dinghy
- Batteries

Advice:

Before wintering you should pay special attention to the following parts and protect them correspondingly:

- Rinse and clean the transmitters of the speedometer and echo sounder.
- Maintain the electrical systems and clean them with suitable materials.
- Water pipes can be successfully cleaned with soft acids, e.g. white vinegar.
- Water valves should be taken to pieces and greased.
- The toilet and corresponding pipes are cleaned with fresh water.
- The rudder should be fixed that no movements are possible (e.g. by fixing the tiller or wheel).

Engine:
- Fill the fuel tank completely
- Exchange the propeller's sacrificial anode (if necessary).
- Empty all cooling-water of the engine and follow the instructions of the manufacturer.
- Slacken all belts (lighting engine and other engine driven devices).

Winter storage
- Observe all notes in the engine manual.
- Store the fully charged batteries at a ventilated frost-free place.
- Grease the steering wire and –components
- Remove all water out of the ship and protect it against rainwater entering it.
- Replace all components which seem not to be reliable any longer.

Mast and rigging
It may not always be possible, but it is recommendable:
- Unship the mast,
- Refit all standing and running rigging,
- Inspect the cables and other wires,
- Inspect bolts, spanners and other tie points for possible fatigue of material or cracks,
- Rinse all aluminium parts with fresh water
- Rinse all lines/ropes with fresh water and store them in a dry place,
- Rinse and grease all guide rollers of the mast and the boom.

5. Final remarks and notes

This manual is in conformity with the directives of the harmonised European Norm EN 10240. Much of it might go without saying for you. Nevertheless we hope, that dealing with the different chapters of this manual will help you to understand the technical systems and the ideas behind them. As already mentioned in the introduction, the purpose of this manual is to contribute to an unspoilt use of the yacht.

Among the things that are not dealt with are e.g. the personal safety equipment. This solely belongs to the responsibilities of the skipper. It goes without saying that there have to be means of rescue for all persons on board. But this also includes the procurement and maintenance of a life raft, of signalling means, a first-aid- as well as a tool-kit.
Since the European Recreational Craft Directive pays special attention to fire protection it shall also be mentioned, that fire extinguishers have to be maintained in regular intervals and that it belongs to the duties of a skipper to introduce his crew into their operation.
Those being prepared for an emergency are normally never involved. But just in case: the yacht is properly equipped for those situations with suitable means.

We are constantly working on further developments of our sailing yachts. We hope you will understand that we have to reserve the right to carry out changes as far as form, equipment and technology is concerned. For these reasons you cannot lay claim to a complete correspondence of your yacht with the information, figures and descriptions in this manual.

If your yacht should be equipped with any details not being referred to in this manual or in the owner's file, your party to the contract will inform you about the correct operation and maintenance.

Since all yachts, manufactured by **BAVARIA Yachtbau GmbH**, are exclusively sold by official dealers there is no contractual relationship between the yard and the customer/owner.

Thus **BAVARIA Yachtbau GmbH** is not familiar with details of the contract between the dealer and the customer. That's why it is not urgently necessary that your party to the contract takes over the full extent of our warranty conditions.
So, if you have to make a claim it is unavoidable to contact your party to the contract.

7. List of manuals supplied

- manual with declaration of conformity
- engine assurance board with corresponding operating instruction
- gas test document with corresponding working instruction
- release checklist
- leaflets and description of production work
- working instructions: hand operated bilge pump
  compass
  bilge pump
  WC-instruction
  elapsed-time indicator

Proof of identity

(to be completed by the dealer or party to the contract)

1. First launch : .....
2. Date of delivery to the owner: .....
3. Type of boat: .....
4. Hull identification number: .....
5. Commission number: .....
6. Name of the yacht: .....
7. Manufacture and type of engine: .....
8. Engine number: .....
9. Gear (manufacture, type, gear ratio): .....
10. Propeller (manufacture, type, dim.): .....
11. Dealer, representative (name/address): .....

    .....

    .....
12. Signature/stamp dealer: .....

Please return signed to:

(address of the dealer)

Acknowledgement of receipt

Name:

Address:

Owner of the yacht *BAVARIA 31* **HIN**

This recreational craft gets the guarantee mentioned with the yacht.

This guarantee begins on _____ (date of commencement)

Signature: _____